LRE04AD024

MICRO PLCS, EXPANSION MODULE, AUXILIARY SUPPLY VOLTAGE 24VDC, 4 ANALOG INPUTS 0...10V/0...20MA



Product designation				Micro PLC expansion module, 4 analog inputs 0…10VDC/0…20mA
Product type designation				LRE04AD024
Auxiliary supply voltage				24VDC
Number of inputs			n°	4 analog
Power supply				
Rated auxil. supply voltage				24VDC
Operating voltage range				20.4…28.8VDC
Avarage current consumption			mA	70
Analog inputs				
Number of analog input			n°	4
Analog input type				Configurable voltage or current inputs
Inputs signal range			V	0…10VDC 0/4…20mA
Resolution				Voltage inputs: 10mV Current inputs: 40µA
Connections				
Terminals type				Screw
Ambient conditions				
Temperature				
	Operating temperature			
		min	°C	-20
		max	°C	+55
	Storage temperature			
		min	°C	-40
		max	°C	+70
Relative humidity			%	<90% (non condensing)
Housing				
Mounting				35mm DIN rail or screw fixing (M4x15mm)
Degree of protection				IP20
Dimensions (W x H x D)			mm	38 x 106 x 59.3
Weight			g	160
Dimensions				

The characteristics described in this document are subject to updates or modifications at any time. The descriptions, technical and functional information, illustrations and instructions in this brochure are purely illustrative, and are consequently not contractually binding

LRE04AD024

MICRO PLCS, EXPANSION MODULE, AUXILIARY SUPPLY VOLTAGE 24VDC, 4 ANALOG INPUTS 0...10V/0...20MA

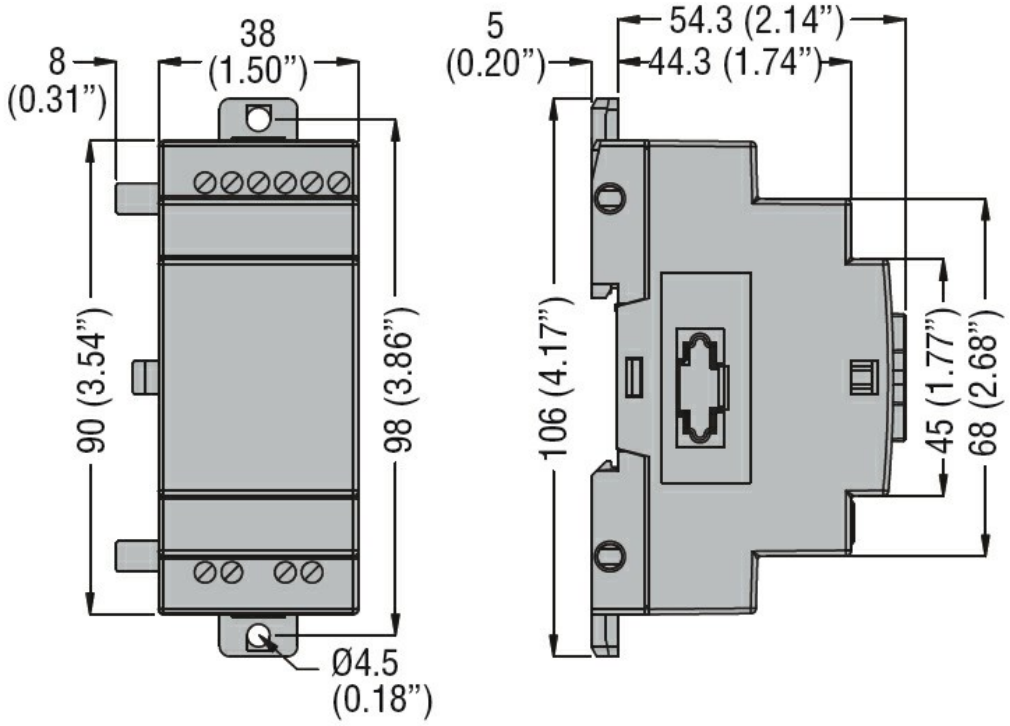

Wiring diagrams

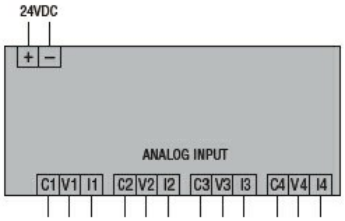

Certifications and compliance

Compliance

CSA C22.2 n° 142
IEC/EN 61131-2
UL508

Certificates

cULus
EAC

The characteristics described in this document are subject to updates or modifications at any time. The descriptions, technical and functional information, illustrations and instructions in this brochure are purely illustrative, and are consequently not contractually binding