INSTALLATION INSTRUCTION

Switch Disconnectors

OT630-800E, OT600U



Table of contents

03	**Installation**
04	**Labels**
05	**Terminal clamps OZX_**
06	**Terminal shrouds OTS_**
07	**Phase separators OTB_** **Clearances per UL**
08	**Auxiliary contacts OA_**
09	**Module for aux contacts OEA28**
10	**Fourth pole OTZ_**
11	**Direct mount handle OTV_**
12	**Interlocking OTZT3**
13–14	**Dimension drawings**
15	**Warning table**

Installation

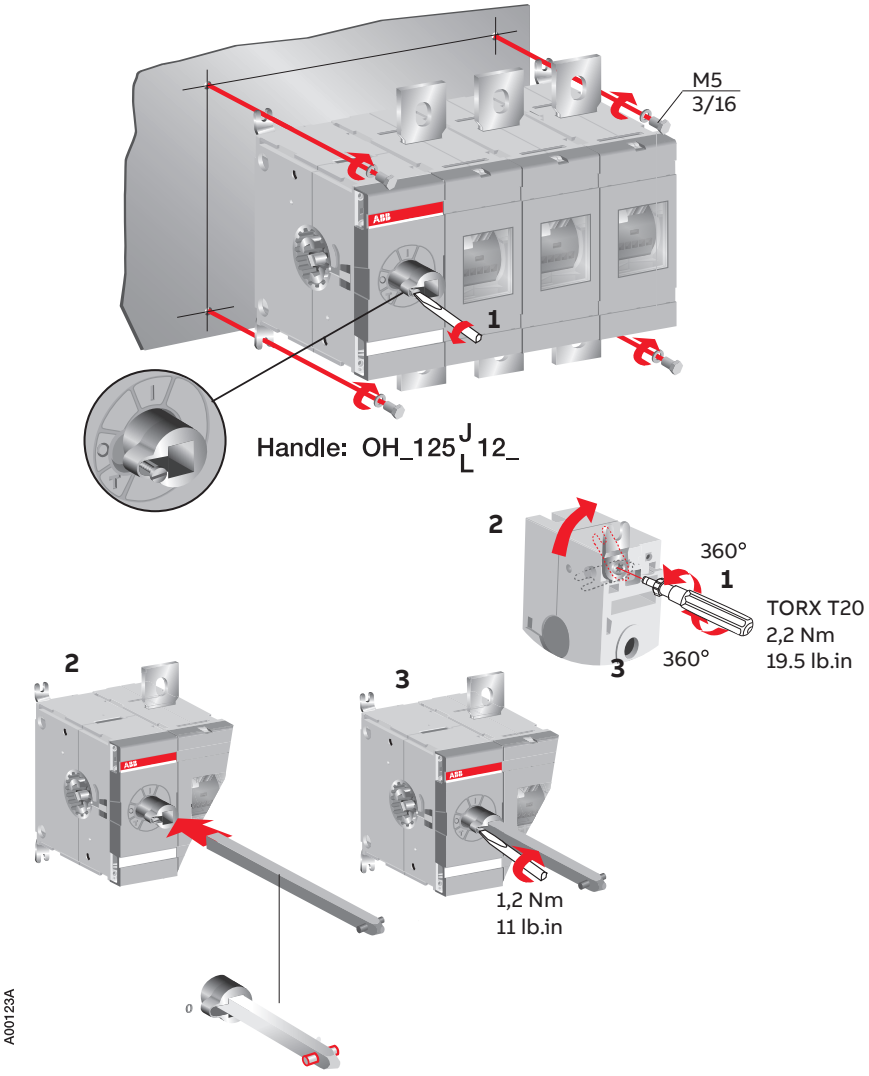

Labels

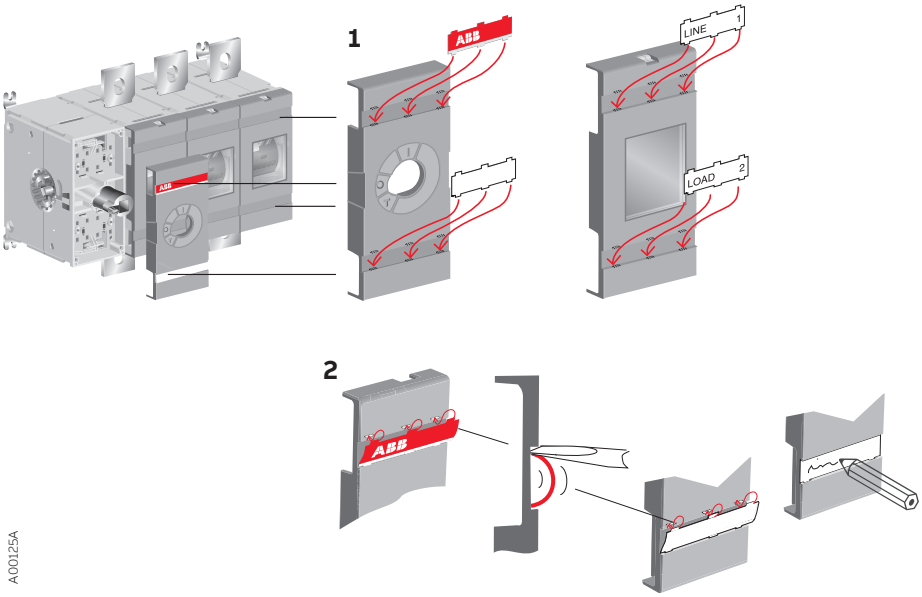

A00125A

Terminal clamps
OZX_

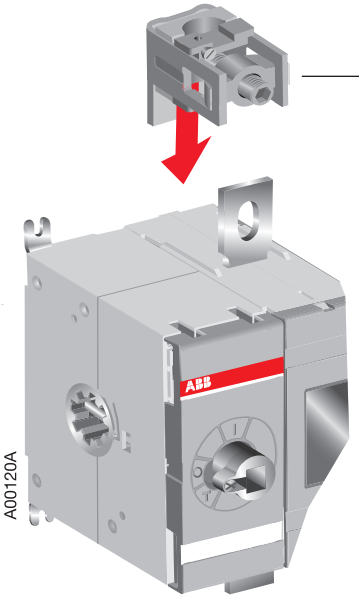

OT630_
OT800_
OZXB3
OZXB4
OZXB5
OZXB6
OZXB7L

OT600U_
OZXA800_
OZXA806_

Terminal shrouds
OTS_

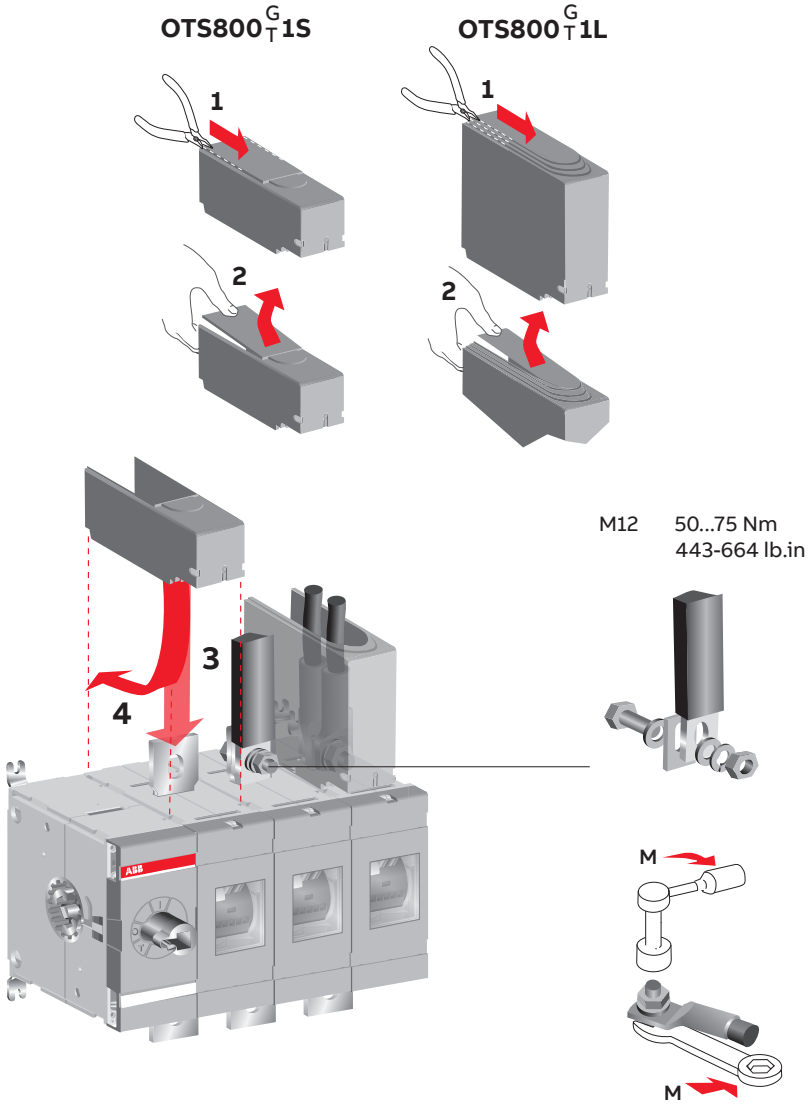

Phase separators
OTB_

Barriers 68838 or shrouds must be used on OT600U_ to maintain 1" clearance, if lugs are wider than 39 mm (1.54 in).

Type for package of 6 barriers is OTB 800/6.

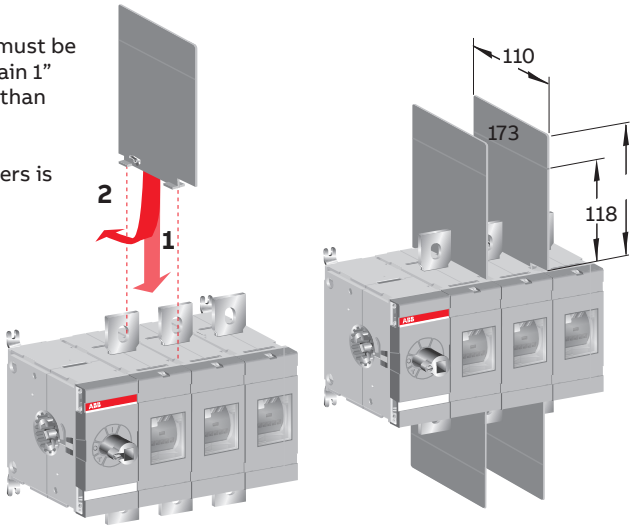

A00127A

Clearances per UL98

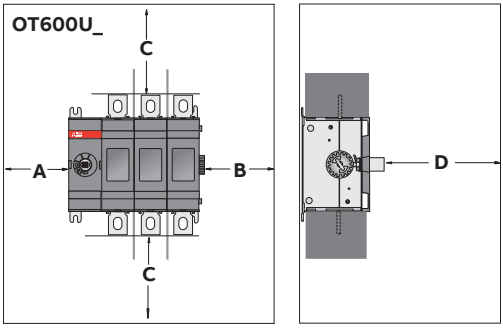

A	B	D
0	13 mm / 0.5 in	13 mm / 0.5 in

AWG	C
2	100 mm 4 in
1	100 mm 4 in
1/0	125 mm 5 in
2/0	150 mm 6 in
3/0-4/0	175 mm 7 in

MCM	C
250	200 mm 8 in
300	250 mm 10 in
350	300 mm 12 in
400	330 mm 13 in
500	356 mm 14 in
600	381 mm 15 in

Minimum enclosure size or equivalent volume

Current	Height	Width	Depth
575 A	610	508	254
600 A	600	700	300

Auxiliary contacts
OA_

A

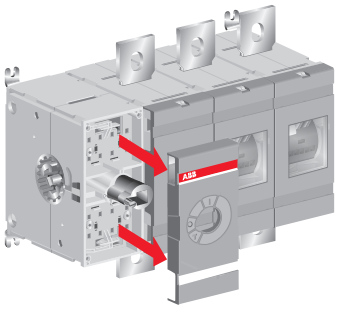

B

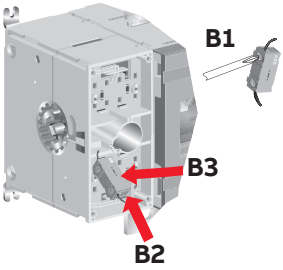

C

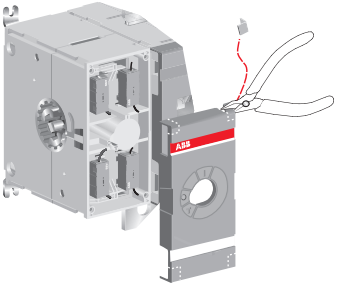

D

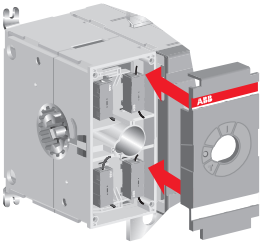

NO: OA1G10
NC: OA3G01

Test contact

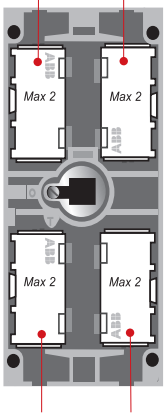

Test indication contact

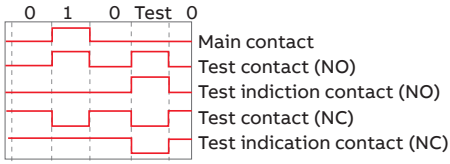

Remove

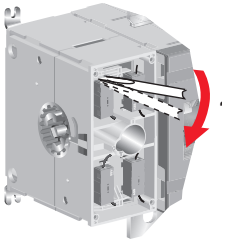

Module for aux contacts
OEA_

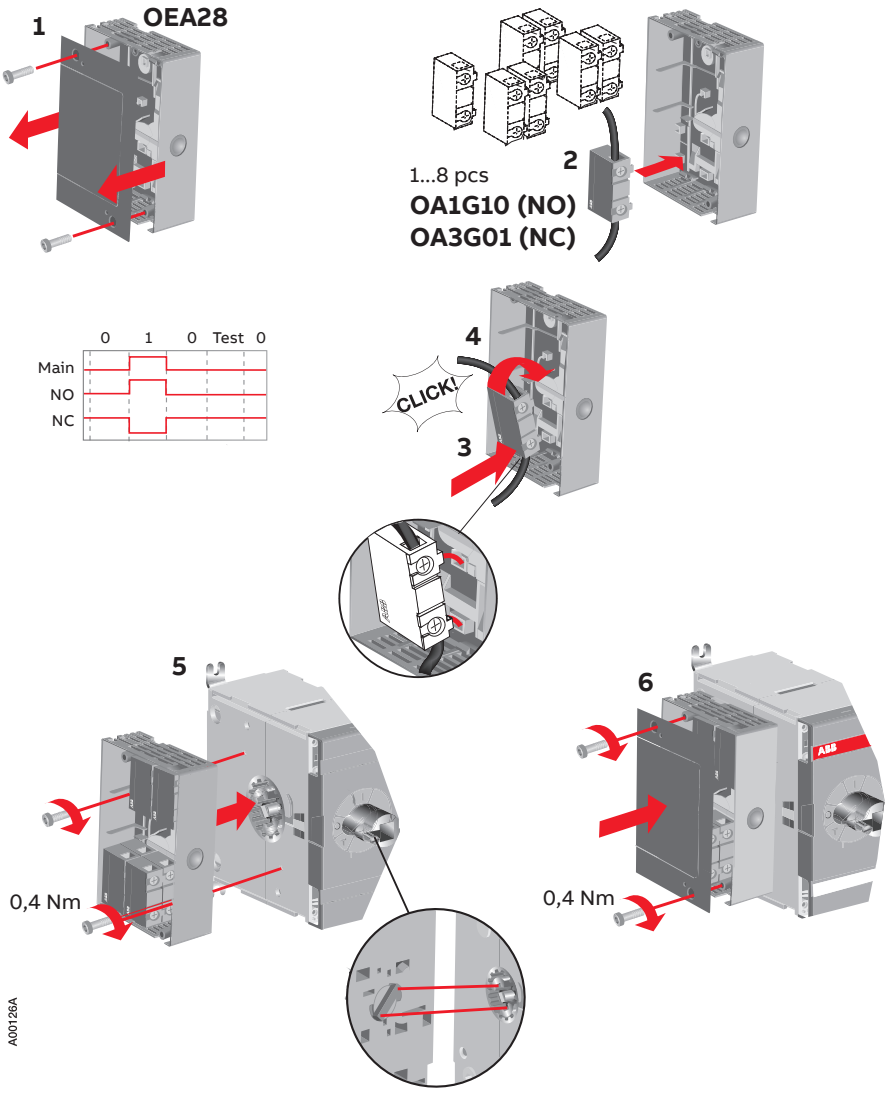

Fourth pole
OTZ_

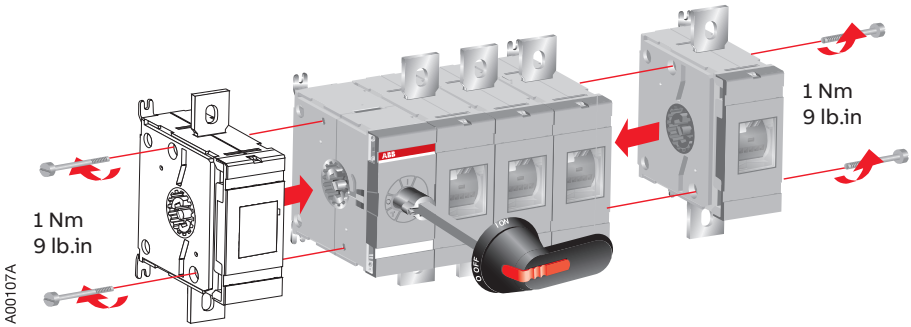

Direct mount handle
OTV_

OTV800EK



OT630_800E01_04

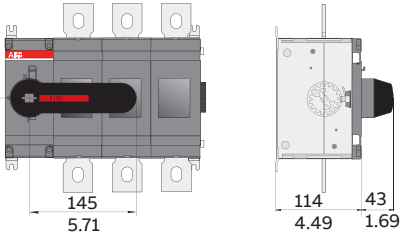

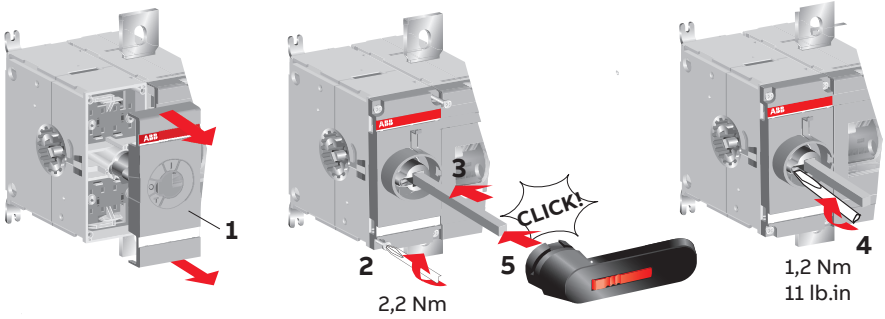

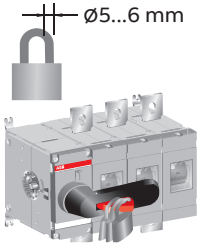

Note: Use protection against direct contact. For example:

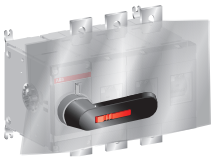

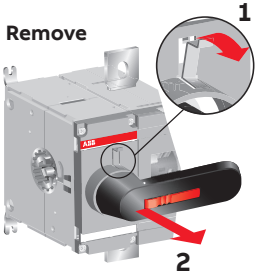

00230A

Interlocking
OTZT3

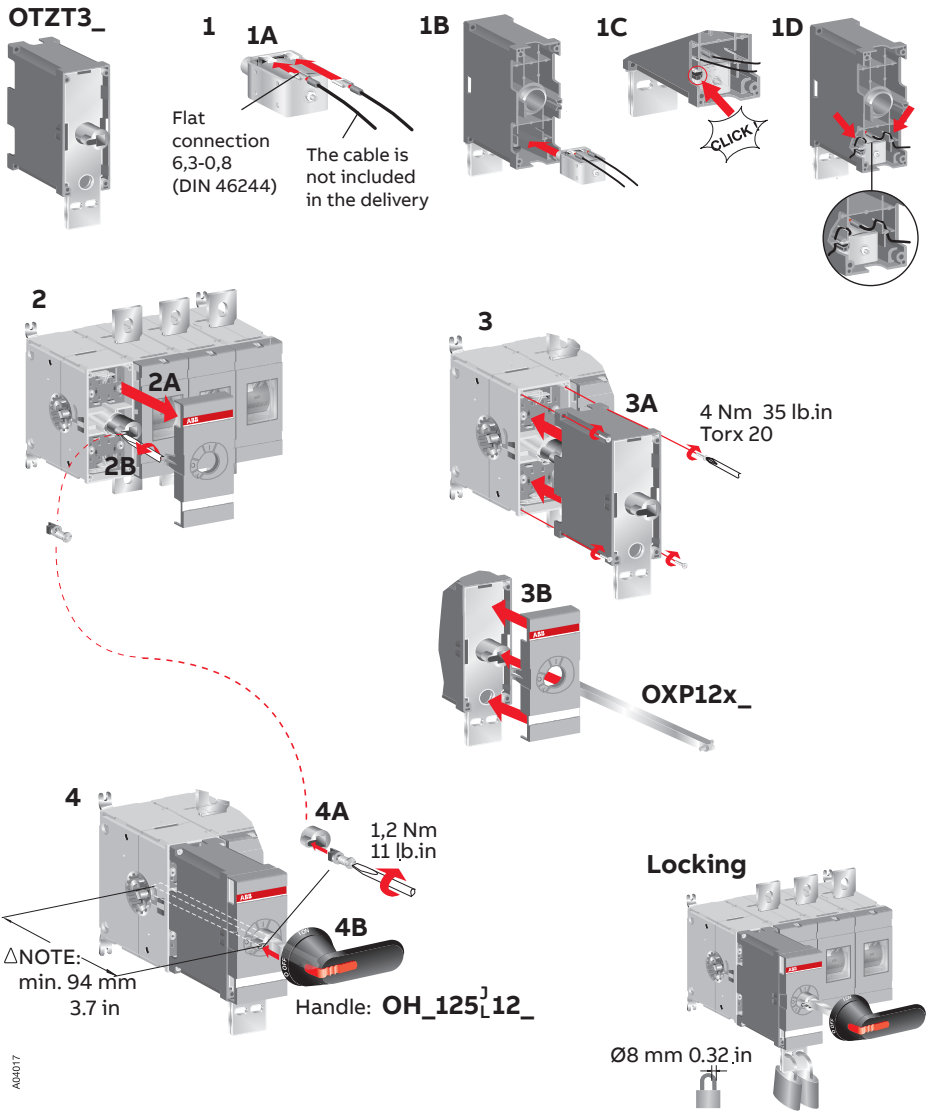

Dimension drawing
OT600-800_01-04

mm
in

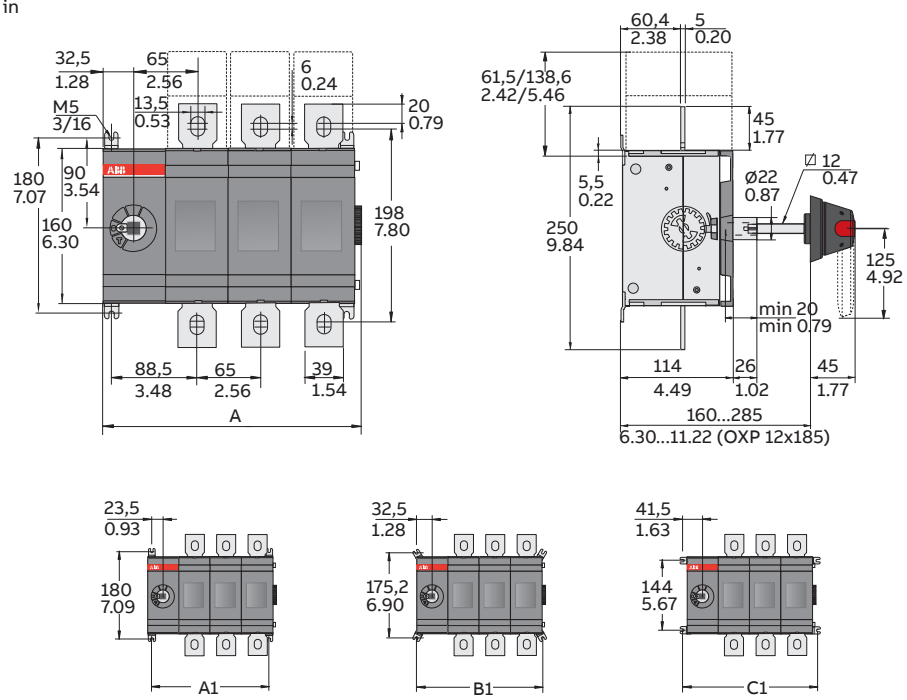

mm	OT600/630/800			
in	E01/U01	E02/U02	E03/U03	E04/U04
A	136/5.35	201/7.91	266/10.47	331/13.03
A1	112/4.41	177/6.97	242/9.53	307/12.09
B1	130/5.12	195/7.68	260/10.24	325/12.80
C1	148/5.83	213/8.39	278/10.95	343/13.50

Dimension drawing
OT600-800_11-22

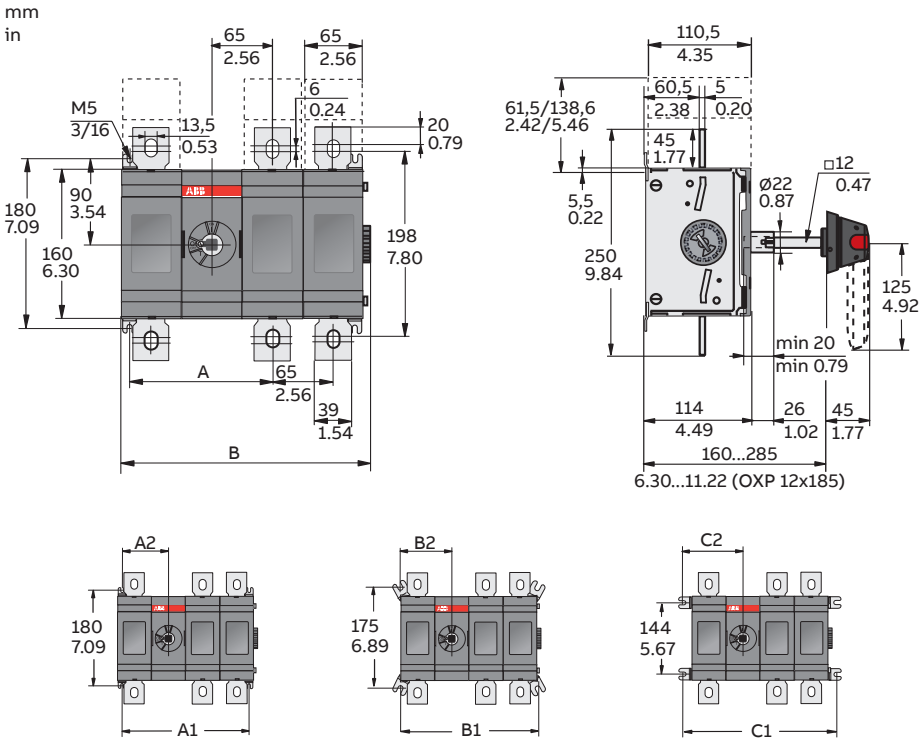

mm / in	OT600/630/800					
	E11	E12	E13	E22	E23	E33
A	153,5/6.04	153,5/6.04	153,5/6.04	218,5/8.60	218,5/8.60	283,5/11.16
B	201/7.91	266/10.47	331/13.03	331/13.03	396/15.59	461/18.15
A1	177/6.97	242/9.53	307/12.09	307/12.09	372/14.65	437/17.20
A2	88,5/3.48	88,5/3.48	88,5/3.48	153,5/6.04	153,5/6.04	218,5/8.60
B1	195/7.68	260/10.24	325/12.80	325/12.80	390/15.35	455/17.91
B2	97,5/3.84	97,5/3.84	97,5/3.84	162,5/6.40	162,5/6.40	227,5/8.96
C1	213/8.39	278/10.94	343/13.50	343/13.50	408/16.06	473/18.62
C2	106,5/4.19	106,5/4.19	106,5/4.19	171,5/6.75	171,5/6.75	236,5/9.31









BG Внимание! Опасно напрежение! Да се монтира само от лице с електротехническа квалификация.
CN 警告！电压危险！只能由专业电工进行安装。
CZ Varování! Nebezpečné napětí! Montáž smí provádět výhradně elektrotechnik!
DA Advarsel! Farlig elektrisk spænding! Installation må kun foretages af personer med elektroteknisk ekspertise.
DE Warnung! Gefährliche Spannung! Installation nur durch elektrotechnische Fachkraft.
EL Προειδοποίηση! Υψηλή τάση! Η εγκατάσταση *πρέπει* να γίνεται μόνο από εξειδικευμένους ηλεκτροτεχνικούς.
EN Warning! Hazardous voltage! Installation by person with electrotechnical expertise only.
ES ¡Advertencia! ¡Tensión peligrosa! La instalación deberá ser realizada únicamente por electricistas especializados.
ET Hoiatus! Ohtlik pinge. Paigaldada võib ainult elektrotehnika-alane ekspert.
FI Varoitus! Vaarallinen jännite! Asennuksen voi tehdä vain sähköalan ammattihenkilö.
FR Avertissement! Tension électrique dangereuse! Installation uniquement par des personnes qualifiées en électrotechnique.
HR Upozorenje! Opasan napon! Postavljati smije samo elektrotehnički stručnjak.
HU Figyelmeztetés! Veszélyes feszültség! Csak elektrotechnikai tapasztalattal rendelkező szakember helyezheti üzembe.
IE Rabhadh! Voltas guaiseach! Ba chóir do dhuine ag a bhfuil saineolas leictriteicniúil, agus an té sin amháin, é seo a shuiteáil.
IT Avvertenza! Tensione pericolosa! Fare installare solo da un elettricista qualificato.
LT Dėmesio! Pavojinga įtampa! Dirbti leidžiama tik elektrotechniko patirties turintiems asmenims.
LV Uzmanību! Bīstami - elektrība! Montāžas darbus drīkst veikt tikai personas, kurām ir atbilstošas elektrotehniskās zināšanas.
MT Twissija! Vultaġġ perikoluż! Għandu jiġi installat biss minn persuna b'kompetenza elettroteknika.
NL Waarschuwing! Gevaarlijke spanning! Mag alleen geïnstalleerd worden door een deskundige elektrotechnicus.
NO Advarsel! Farlig spenning! Montering skal kun utføres av kvalifiserte personer med elektrokompetanse.
PL Ostrzeżenie! Niebezpieczne napięcie! Instalacji może dokonać wyłącznie osoba z fachową wiedzą w dziedzinie elektrotechniki.
PT Aviso! Tensão perigosa! A instalação só deve ser realizada por um eletricista especializado.
RO Avertizare! Tensiune periculoasă! Instalarea trebuie efectuată numai de către o persoană cu experienţă în electrotehnică.
RU Осторожно! Опасное напряжение! Монтаж должен выполняться только специалистом-электриком.
SE Varning! Farlig spänning! Installation får endast utföras av en elektriker.
SK Varovanie! Nebezpečné napätie! Montáž môže vykonávať iba skúsený elektrotechnik.
SL Opozorilo! Nevarna napetost! Vgradnjo lahko opravi le oseba z elektrotehničnim strokovnim znanjem.

Contact us

ABB Oy
P.O. Box 622
FI-65101 Vaasa
Finland

abb.com/lowvoltage

© Copyright 2020 ABB. All rights reserved.
Specifications subject to change without notice.

34 OT600-800 rev. N / 1SCC301042M0211 # 15.09.2020