R64G - Olympian Plus plug-in system Pressure regulator



- Port size: 1/4" ... 3/4" (ISO G/PTF)
- Non-rising adjusting knob has snap-action lock
- Diaphragm and balanced valve design ensure good regulation characteristics

Technical features

Medium:
Compressed air only

Maximum operating pressure:
17 bar (246 psi)

Pressure range:
(standard)
0,3 ... 10 bar (4 ... 145 psi)
(optional)
0,4 ... 4 bar (5 ... 58 psi),
0,7 ... 17 bar (10 ... 246 psi)

Port sizes:
1/4", 3/8", 1/2" or 3/4"

Gauge port:
1/8 PTF with PTF main ports
Rc1/8 with ISO G main ports

Flow:
See table below

Relieving:
With (standard)
Non-relieving (optional)

Standard compliances:
II 2G Ex h IIC T6 Gb
II 2D Ex h IIIC T85° Db

Ambient/Media temperature:
-20° ... +80°C (-4° ... +176°F)
Version with gauge:
-20° ... +65°C (-4° ... +149°F)
Air supply must be dry enough to avoid ice formation at temperatures below +2°C (+35°F).

Materials:
Body and yoke: Zinc alloy
Connection piece: Aluminium
Bonnet: Aluminium
Adjusting knob: Acetal resin
Elastomers: NBR

Technical data, standard models with relieving

Symbol	Port size	Size	Pressure range (bar)	Flow * (dm^3/s)	Adjustment	Weight (kg)	Model
	G1/4	–	0,3 ...10	35	Knob	1,63	R64G-2GK-RMN
	G3/8	–	0,3 ...10	80	Knob	1,61	R64G-3GK-RMN
	G1/2	Basic	0,3 ...10	120	Knob	1,59	R64G-4GK-RMN
	G3/4	–	0,3 ...10	120	Knob	1,87	R64G-6GK-RMN
	Without yoke	–	0,3 ...10		Knob	1,16	R64G-NNK-RMN

* Typical flow with 10 bar (145 psi) inlet pressure, and 6,3 bar (91 psi) set pressure and 1 bar (14.5 psi) drop from set.

Option selector

R64G-★★★-★★★

Port size	Substitute
1/4"	2
3/8"	3
1/2"	4
3/4"	6
Without yoke	N
Thread	**Substitute**
PTF	A
ISO G (standard)	G
Without yoke (standard)	N
Adjustment	**Substitute**
Knob (standard)	K
T-bar (0,7 ... 17 bar)	T *2)

Gauge	Substitute
With	G
Without (standard)	N
Pressure range (bar) *1)	**Substitute**
0,3 ...10 (standard)	M
0,3 ... 4	F
0,7 ... 17	S*2)
Diaphragm	**Substitute**
Relieving (standard)	R
Non-relieving	N

*1) Outlet pressure can be adjusted to pressures in excess of and less than, those specified. Do not use these units to control pressures outside of the specified ranges.

*2) Units with 17 bar (246 psi) outlet pressure range are available only with the T-bar adjustment; therefore substitute T at the 7th digit and S at the 9th position.

Our policy is one of continued research and development. We therefore reserve the right to amend, without notice, the specifications given in this document. (1998 - 8078e) © 2020 Norgren GmbH

Flow characteristics

Inlet pressure: 10 bar, port size: 1/2”
Pressure range: 0,3 ... 10 bar

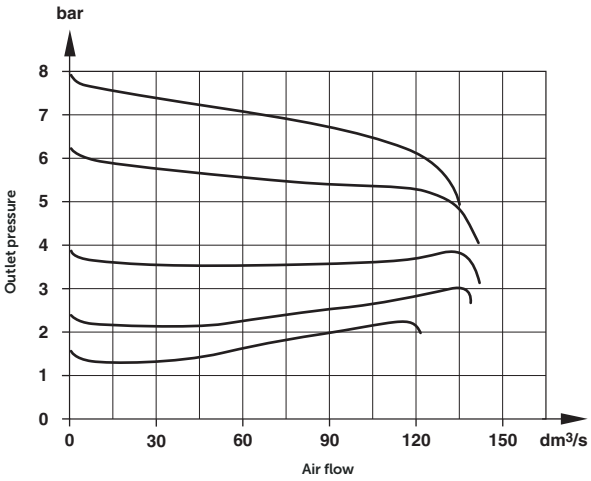

Regulating characteristics

Port size: 1/2”

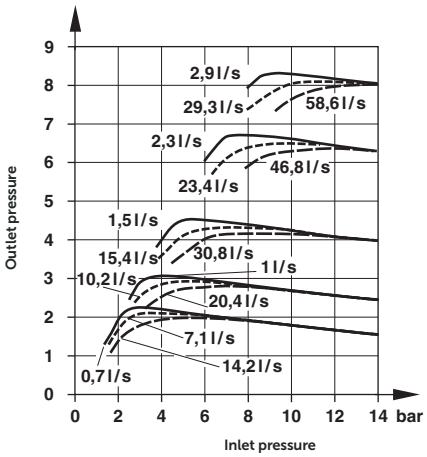

Accessories, service kit and gauges



Accessories

Thread	Models with G-thread Single yoke  5	Double yoke 	3/2 Shut-off valve Threaded inlet only 	Threaded outlet only 	End connector kit  2	Rear entry bracket kit  8
G1/4	Y64A-2GA-N1N	Y64A-2GA-N2N	T64T-2GB-P1N	T64T-2GC-P1N	–	–
G3/8	Y64A-3GA-N1N	Y64A-3GA-N2N	T64T-3GB-P1N	T64T-3GC-P1N	–	–
G1/2	Y64A-4GA-N1N	Y64A-4GA-N2N	T64T-4GB-P1N	T64T-4GC-P1N	74505-50	–
G3/4	Y64A-6GA-N1N*	Y64A-6GA-N2N*	T64T-6GB-P1N	T64T-6GC-P1N	74505-53	18-026-981
1/4 PTF	Y64A-2AA-N1N	Y64A-2AA-N2N	T64T-2AB-P1N	T64T-2AC-P1N	–	–
3/8 PTF	Y64A-3AA-N1N	Y64A-3AA-N2N	T64T-3AB-P1N	T64T-3AC-P1N	–	–
1/2 PTF	Y64A-4AA-N1N	Y64A-4AA-N2N	T64T-4AB-P1N	T64T-4AC-P1N	74505-52	–
3/4 PTF	Y64A-6AA-N1N*	Y64A-6AA-N2N*	T64T-6AB-P1N	T64T-6AC-P1N	74505-55	–

*These yokes are supplied with two end connenctor kits as standard.

Our policy is one of continued research and development. We therefore reserve the right to amend, without notice, the specifications given in this document. (1998 - 8078e) © 2020 Norgren GmbH

Bracket mounting	Nut	Tamper resistant cap & seal wire	Yoke connector kit	Porting block	Padlock with two keys
					
1	4	3	9		
74504-50	74502-89	4355-51	74503-51	74507-50	0613633 (brass)

Service kit

Service kit

R64G-KITR (for relieving version)

Gauges

Center back connection, white face (full technical specification see datasheet 8.900.900)

6



Pressure range bar *1	MPa	psi	Ø	Thread size	Model
0 ... 4	0 ... 0,4	0 ... 58	50 mm	R1/8	18-015-011
0 ... 10	0 ... 1	0 ... 145	50 mm	R1/8	18-015-013
0 ... 25	0 ... 2,5	0 ... 362	50 mm	R1/8	18-015-014

*1) primary scale

Center back connection, black face for North America (full technical specification see datasheet 8.900.900)

6



Pressure range psig *1	bar	MPa	Ø	Thread size	Model
0 ... 60	0 ... 4	0 ... 0.4	2" (50 mm)	1/8 NPT	18-015-202
0 ... 160	0 ... 11	0 ... 1.1	2" (50 mm)	1/8 NPT	18-015-204
0 ... 400	0 ... 28	0 ... 2.8	2" (50 mm)	1/8 NPT	18-015-206

*1) primary scale

Our policy is one of continued research and development. We therefore reserve the right to amend, without notice, the specifications given in this document. (1998 - 8078e) © 2020 Norgren GmbH

Basic dimensions

Dimensions in mm
Projection/First angle

Standrad

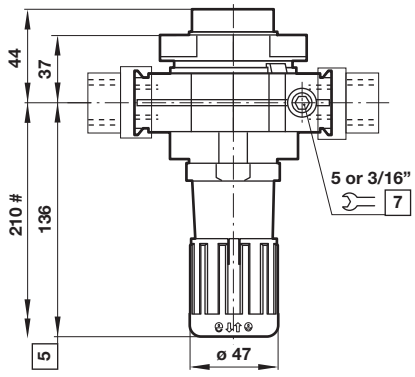

T-bar

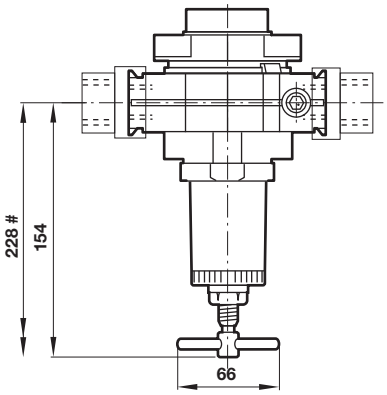

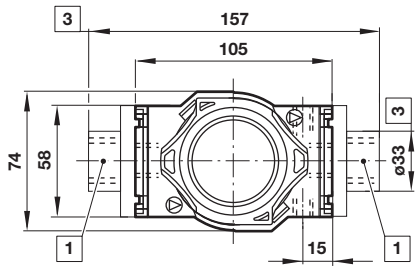

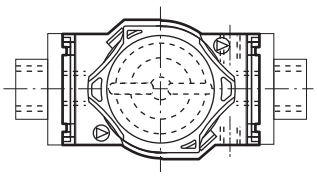

Minimum clearance required to remove unit from yoke
1 Main ports 1/4”, 3/8”, 1/2” or 3/4”
3 For main ports 3/4” only
5 Reduces by 4 mm with knob in locked position
7 Gauge port

Single yoke with bracket mounting

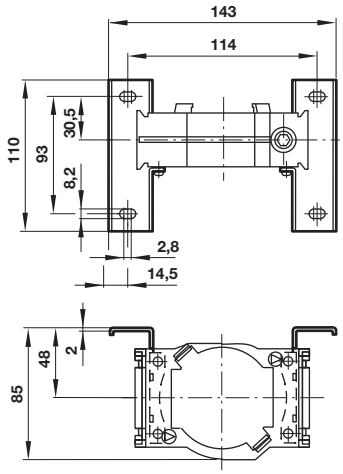

Double yoke with bracket mounting

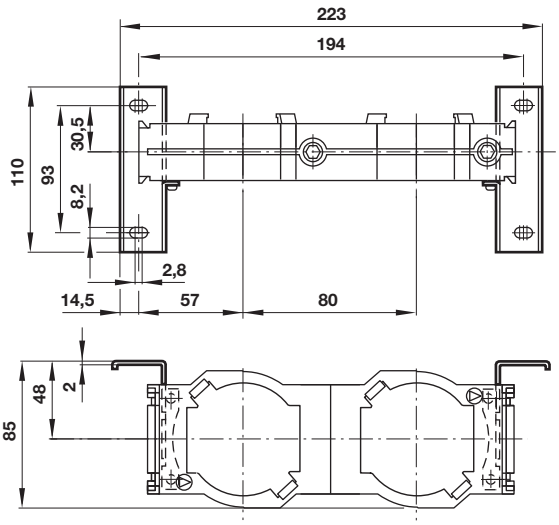

Our policy is one of continued research and development. We therefore reserve the right to amend, without notice, the specifications given in this document. (1998 - 8078e) © 2020 Norgren GmbH

Rear entry bracket
18-026-981

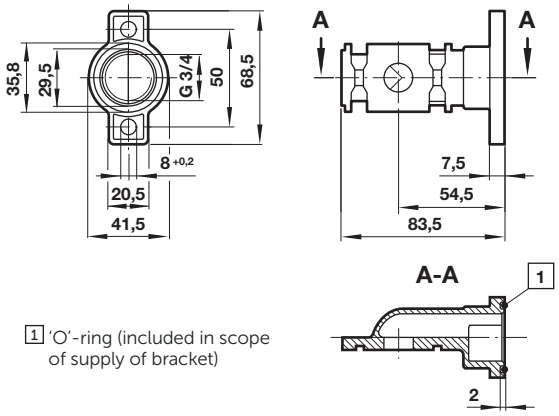

1 'O'-ring (included in scope of supply of bracket)

Porting block
74507-50

Dimensions in mm
Projection/First angle

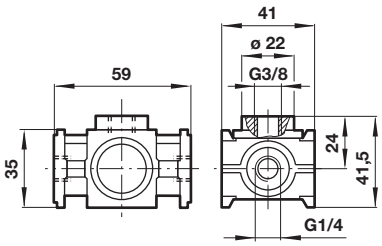

Adjustable pressure switch
4346-99

Voltage	24 V d.c./240 V a.c.
Current	0,5 A (d.c.); 5 A (a.c.)
Pressure range	2 ... 10 bar
Repeatabillity	2% of full set point range at 20°C
Average deadband	0,8 ... 1,7 bar
Electrical connection (corresponding to choosen coil)	EN 175301-803 - Form C, 15 mm
Degee of protection:	IP65
Adjustable	Standard
Material	Body: Aluminium, Elastomers: NBR

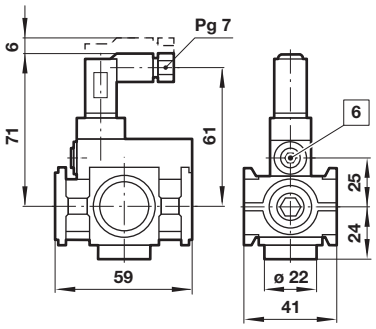

6 Adjusting screw

3/2 Shut-off valve

Symbol	A	B	ø C	Model
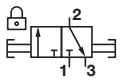	G1/4	48	27	T64T-2G*-P1N
	G3/8	48	27	T64T-3G*-P1N
	G1/2	48	27	T64T-4G*-P1N
	G3/4	51	33	T64T-6G*-P1N

* B = Threaded inlet only, C = Threaded outlet only

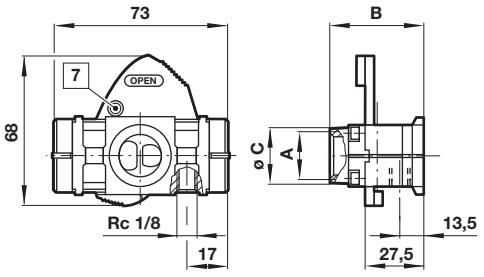

7 Padlock hole 7,5 mm

Warning

These products are intended for use in industrial compressed air systems only. Do not use these products where pressures and temperatures can exceed those listed under **»Technical features/ data«.**

Before using these products with fluids other than those specified, for non-industrial applications, life-support systems or other applications not within published specifications, consult Norgren Ltd.

Through misuse, age, or malfunction, components used in fluid power systems can fail in various modes.

The system designer is warned to consider the failure modes of all component parts used in fluid power systems and to provide adequate safeguards to prevent personal injury or damage to equipment in the event of such failure.

System designers must provide a warning to end users in the system instructional manual if protection against a failure mode cannot be adequately provided.

System designers and end users are cautioned to review specific warnings found in instruction sheets packed and shipped with these products.

Our policy is one of continued research and development. We therefore reserve the right to amend, without notice, the specifications given in this document. (1998 - 8078e) © 2020 Norgren GmbH