DC current transducer DK-B10

I_{PN} = 150 .. 400 A

Split core transducer for the electronic measurement of DC current, with galvanic isolation between the primary circuit and the secondary circuit. 0-10 V DC output voltage proportional to measured current.



Electrical data

Primary nominal current I_{PN} (At)	Output voltage V_{OUT} (V DC)	Types	RoHS since date code
150, 225, 300	0-10	**DK 300 B10**	August 2009
200, 300, 400	0-10	**DK 400 B10**	August 2009

V_C	Supply voltage	20-50	V DC
R_L	Load resistance (min)	50	kΩ
V_{SL}	Output voltage limitation	11.5	V DC
BW	Frequency bandwidth	DC	Hz
I_C	Current consumption (max)	100	mA

Accuracy - Dynamic performance data

X	Accuracy, T_A = 25°C	± 2	% of FS
ε_L	Linearity error	± 0.75	% of I_{PN}
t_r	Response time to 90 % of I_{PN} step	< 100	ms

General data

T_A	Ambient operating temperature (0-95% RH)	- 20 .. + 50	°C
T_S	Ambient storage temperature	- 20 .. + 85	°C
m	Mass	120	g
IPxx	Protection degree	IP 20	
	Standards	Safety IEC 61010-1: 2001	
		EMC [1] IEC 61326-1: 2005	

Note: [1] For IEC 61000-4-3, IEC 61000-4-6 and IEC 61000-4-4 Criterion B: temporary impairment to operational behavior.

Features

- DC measurement (magnitude only)
- Split core case
- Three jumper selectable ranges
- Industry standard 0-10 V DC unipolar current output
- Panel mouting
- Isolated plastic case recognized according to UL 94-V0.

Advantages

- Large aperture
- Extended measuring range
- High isolation between primary and secondary circuits
- Easy to mount, cut installation costs
- No insertion loss (voltage drop).

Applications

- ***Battery banks***
  Load current monitoring
  Charging current monitoring
  Operation supervision
- ***Power supplies***
  DC power or auxiliary loads measurement
- ***Electric heating elements***
  Faster response than temperature sensors.

Application domain

- Renewable Energies and Power Supplies.

 LEM reserves the right to carry out modifications on its transducers, in order to improve them, without prior notice

DC current transducer DK-B10

Isolation characteristics

V_d	Rms voltage for AC isolation test [1], 50 Hz, 1 min	3	kV
V_b	Rated isolation voltage rms [2], reinforced isolation, CAT III, PD2	150	V

Notes: [1] Between primary (completely filling the primary aperture) and secondary

[2] If insulated cable is used for the primary circuit, the voltage category could be improved according to the insulation characteristics given by the cable manufacturer. For example:

Cable isolation (primary):	Category:
HAR 05	600 V CAT III
HAR 07	1000 V CAT III

Safety and warning notes

In order to guarantee safe operation of the transducer and to be able to make proper use of all features and functions, please read these instructions thoroughly! Safe operation can only be guaranteed if the transducer is used for the purpose it has been designed for and within the limits of the technical specifications.
Ensure you get up-to-date technical information that can be found in the latest associated datasheet under www.lem.com.



Caution! Risk of danger
Ignoring the warnings can lead to serious injury and/or cause damage!
The electric measuring transducer may only be installed and put into operation by qualified personnel that have received an appropriate training.
The corresponding national regulations shall be observed during installation and operation of the transducer and any electrical conductor.
The transducer shall be used in electric/electronic equipment with respect to applicable standards and safety requirements and in accordance with all the related systems and components manufacturer' operating instructions



Caution, Risk of electrical shock
When operating the transducer, certain parts of the module may carry hazardous live voltage (eg. primary conductor, power supply).
The user shall ensure to take all measures necessary to protect against electical shock.
The transducer is a build-in device containing conducting parts that shall not be accessible after installation.
A protective enclosure or additional insulation barrier may be necessary.
The transducer shall not be put into operation if the jaw opening is open (split core version) or the installation is not completed.
Installation and maintenance shall be done with the main power supply disconnected except if there are no hazardous live parts in or in close proximity to the system and if the applicable national regulations are fully observed.

Safe and trouble-free operation of this transducer can only be guaranteed if transport, storage and installation are carried out correctly and operation and maintenance are carried out with care.

Dimensions DK-B10 (in mm)

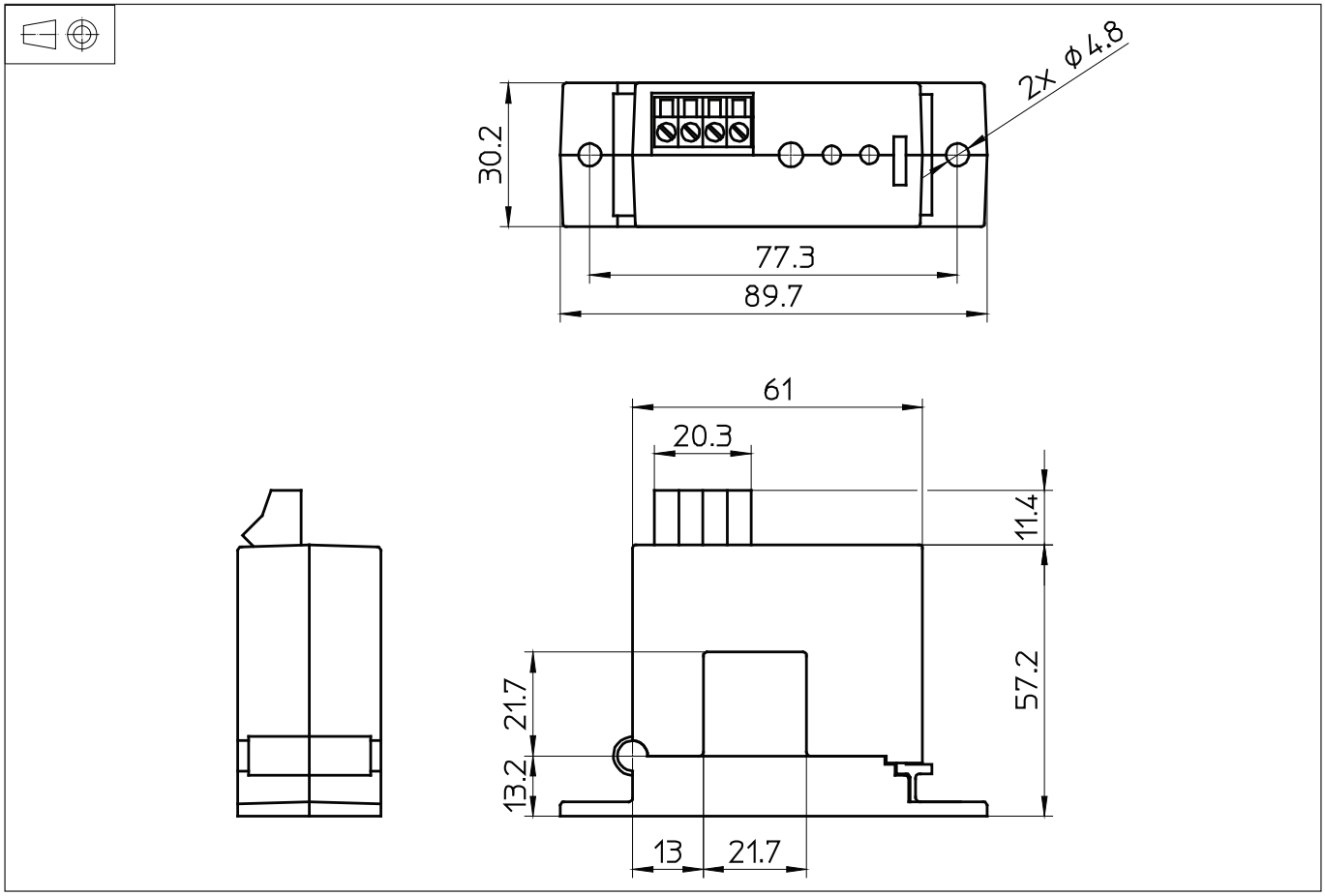

Mechanical characteristics

- General tolerance ± 1 mm
- Primary aperture 21.7 mm square
- Panel mounting 2 holes Ø 4.8 mm
  Distance between holes 77.3 mm

Transfer characteristics

- DC measurement [1] (magnitude only)

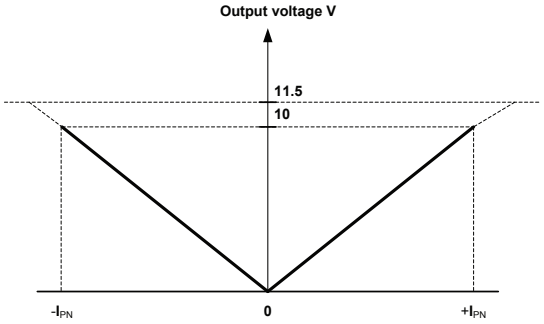

Note: [1] The performance specified in the datasheet is valid within the 0-10 V DC output range only.

Connections

- Dead front captive screw terminals
- 12-22AWG solid or stranded
- Observe polarity
- Output loop is powered by DK transducer.
  No loop power supply required

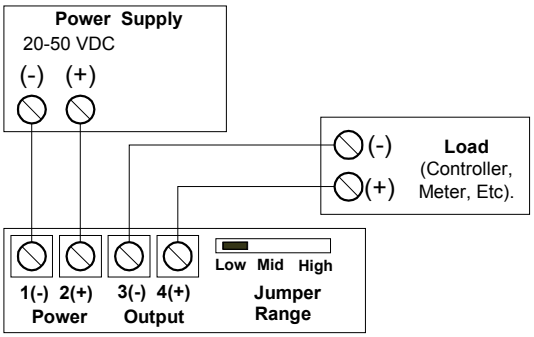

Option on request

- DIN rail adaptor (ref.: F2.90.98.000.1)

Remark

- Temperature of the primary conductor should noe exceed 60°C.

 LEM reserves the right to carry out modifications on its transducers, in order to improve them, without prior notice