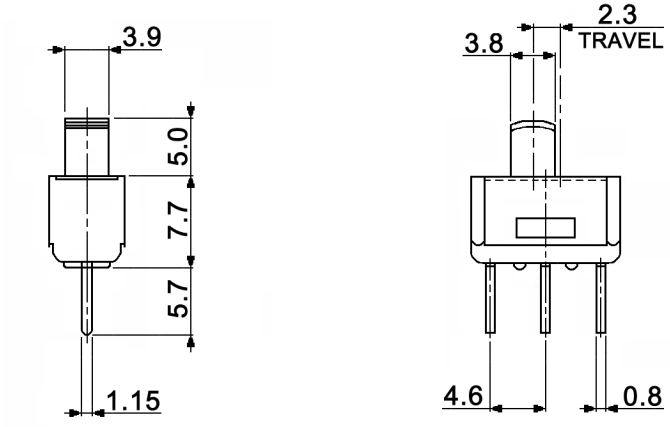

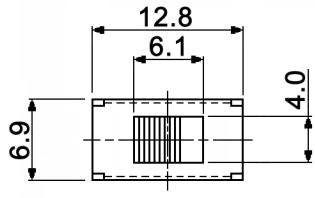

Specifications:

Contact rating:	3A, 125V AC (50/60Hz)
Contact resistance:	20mOhm max.
Insulation resistance:	100MOhm min. at 500V DC
Dielectric strength:	500V AC for 1 minute
Mechanical life:	10 000 cycles
Operating force:	350 +/-150gf
Timing:	non-shorting
Material:	Frame: stainless steel
	Box / pressure finger: phenolic resin
	Actuator: polycarbonate
	Terminal / contact: copper, silver plated

RoHS-conform 2002/95/EC

Tolerances: ±0.3mm			Date	Name	MFP 106 D
			03/11	dr	
			knitter-switch	30 23 16	Page 1/1
Modifications	Date	Name			