DT-AR-045-12

Direct-to-Air Thermoelectric Cooling Assembly

Direct-to-Air Thermoelectric Cooling Assembly

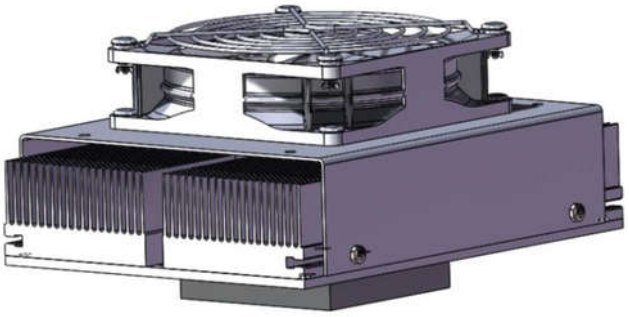

The Direct-to-Air Thermoelectric cooling assemblies are compact devices that can be used to cool down objects through conduction. The objects to be cooled down are mounted onto the metallic plate at the 'cold side' of the assembly from where heat is pumped by Peltier thermoelectric modules and dissipated to the environment through the use of bespoke heat sinks and highly efficient DC fans at the hot side of the assemblies. The thermoelectric modules, whose reliability and maintenance-free operation has been proven by the years, are carefully selected for each assembly to ensure the best cooling performance and minimise power consumption.

Direct-to-air assemblies are available in a variety of cooling power outputs and either in 12V or 24V, as indicated by the part number (i.e. DT-AR-XXX-12 or DT-AR-XXX-24).

Bespoke solutions/configurations are offered, as well as moisture protection options, however these are only available for large order quantities (minimum order quantities apply).

CHARACTERISTICS

- Reliability
- Compact design
- Excellent Control over Temperature
- DC operation (12V or 24V nominal voltage input)
- Thermoelectric modules with high Coefficient of Performance (COP)
- RoHS compliant

MAIN APPLICATIONS

- Electronics' cabinets
- Medical instrumentation
- Analytical diagnostics
- Industrial automation
- Food and beverage cooling
- Laser systems' cooling

DT-AR-045-12 – Assembly Specifications

Maximum Cooling Power P_{Cmax} (W)	48.4
Nominal Voltage (V)	12
Maximum Voltage (V)	15
Nominal Current (A)	4.37
Start-up Current (A)	5.725
Power Input (W)	52.44
Operating Temperature (^oC)	-10 to 46
Weight (kg)	1.2
Performance Tolerance (%)	±10
L10 of fan at 70^oC (hrs)	33434

PERFORMANCE CURVE

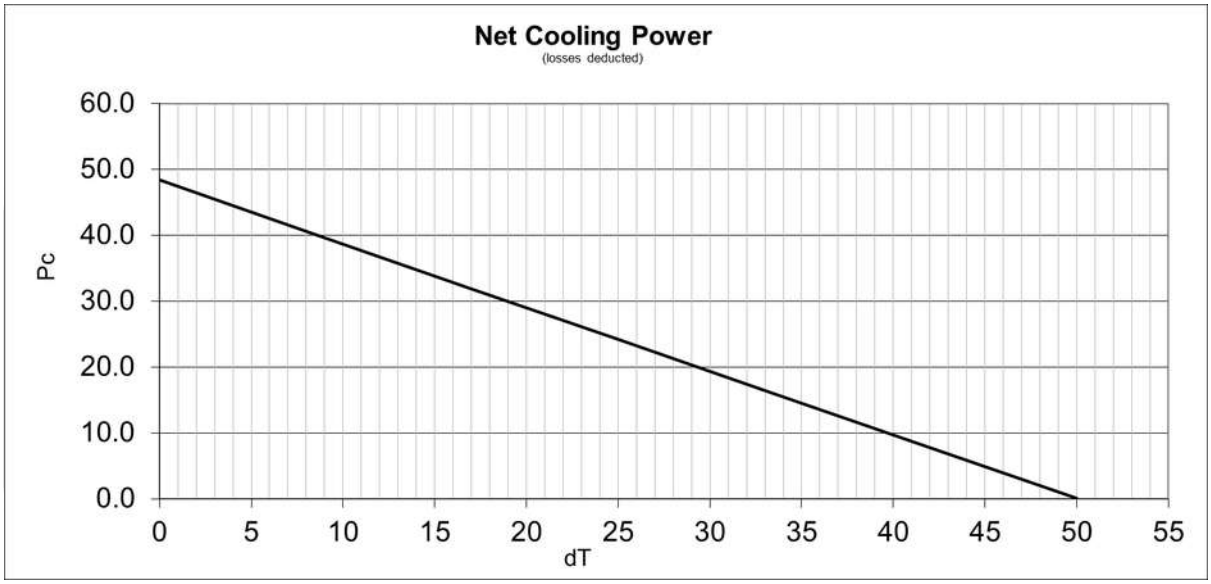

TECHNICAL DRAWINGS

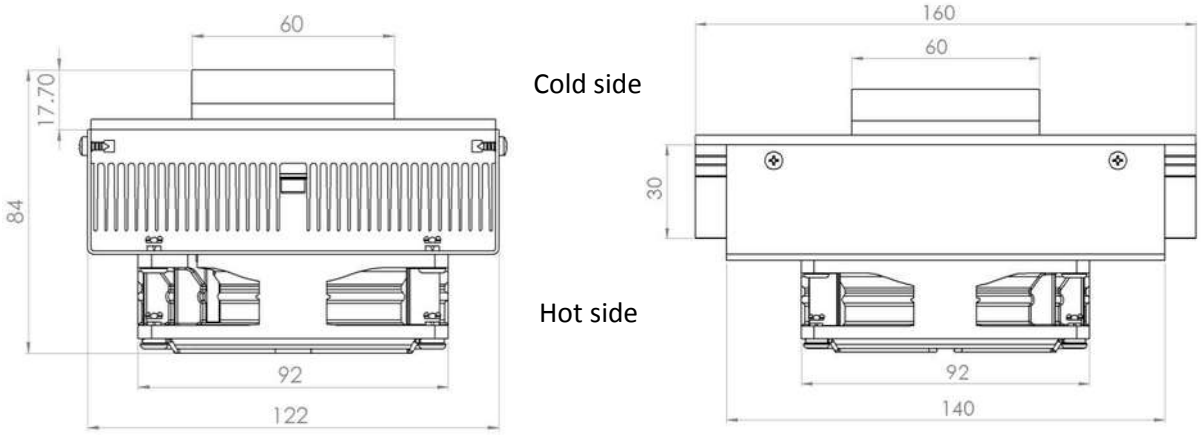

LOCATION AND DIMENSIONS OF MOUNTING HOLES

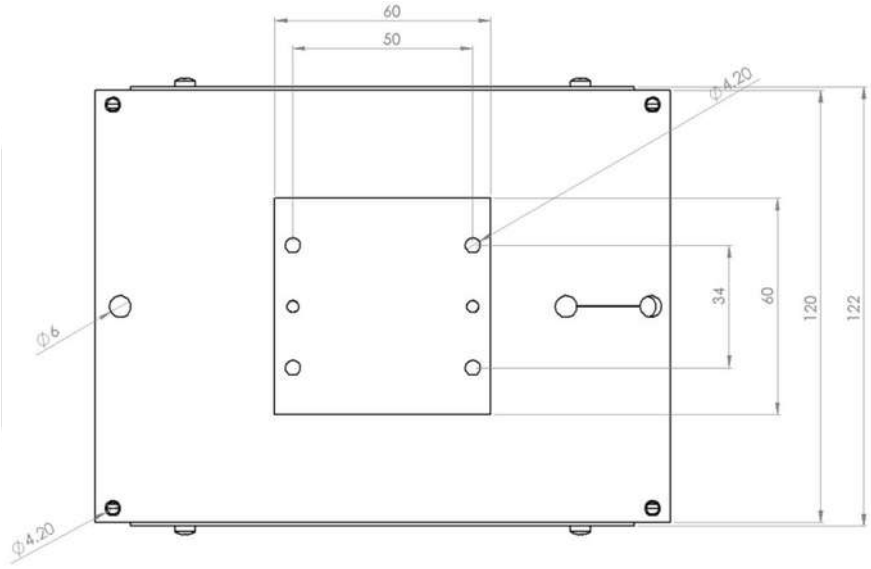

Notes:

1. All dimensions are in mm.
2. Thermally conductive interface material is applied on thermoelectric modules' surfaces for more efficient heat transfer.
3. The assembly, with its current configuration, is for indoor use only.

Contact us:
Europe: +44 (0) 116 279 6899
Asia: +8522 1159628

or send us an email at:
Information: info@etdyn.com
R&D: design@etdyn.com

All assembly specifications are subject to change without prior notice. The Adaptive brand, Adaptive Thermal Management logo and other marks are registered trademarks of Adaptive or an affiliate company thereof.