BES M18MI-PSC50B-S04G
BES0086

PNP
NO
flush mountable

BALLUFF
sensors worldwide

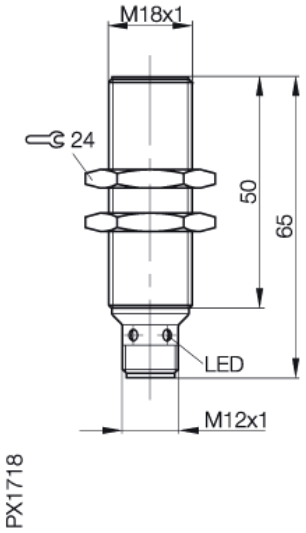

Electrical data:

Off-state current max (Ir)	20 µA
Ripple max. of Ue	= 15 %
Supply voltage max. (Ub)	30 V
Rated operational voltage (Ue)	24 DC V
Load current capacity (Ie)	200 mA
Utilization category	DC 13
Hysteresis max (H)	15 %
Switching output	PNP
Supply voltage min. (Ub)	12 V
Time delay before availability	30 ms
Switching element function	NO
Connection	Connector S4 (M12)
Electrical type	DC
No-load supply current damped	= 15 mA
No-load supply current undamped	15 mA
Operating frequency (f)	700 Hz
Voltage drop max. static	2,5 V

Mechanical data:

Number of Wires	3-wire
Tightening torque	35 Nm
Mounting	flush mountable
Degree of polution	3
Sensing face material	PA 12
Rated operating distance (sn)	5 mm
Assured operating distance	0...4,0 mm
Housing material	CuZn, nickel plated
Diameter	M18x1 mm
Ambient temperature max	+70 °C
Ambient temperature min	-25 °C
Repeat accuracy max. (R)	5 %

General data:

Protected against polarity reversal	yes
Short circuit protected	yes
Brand	GlobalProx
Approval	CE,ULZ1
Degree of protection IP	IP68 per BWN Pr 20
Insulation class	2
Output indication	yes

Wiring:

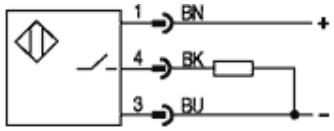

Pinout:
Pinout

