CATALOG

Enclosed switch-disconnectors

Safe and dependable performance



- **Reliable in extreme conditions**
- **Safety and protection**
- **Speed up your project**

Table of contents

01. Overview 4

02. Enclosed switch-disconnectors, 16...125A 9

03. Enclosed switch-disconnectors, 160...1600A 109

04. Fire rated enclosed switch-disconnectors 165

05. Change-over switches 183

06. Accessories 195

Enclosed switch-disconnectors
Safe and dependable performance



Reliable in extreme conditions
All our enclosed switch-disconnectors are built to last and resist the wear of harsh operating conditions. The enclosures are made of high-quality, UV-resistant materials and the degree of protection is up to IP65. All switches are suitable for use both indoors and outdoors.

Safety and protection
Our design is based on ensuring safety and preventing electrical accidents. To make maintenance and installation as safe as possible, we have included features such as padlockable handles, cover interlocks and gas pressure relief functions to our products.

Speed up your project
We can help speed up your project by making the selection of the right switch as quick and easy as possible. Our web-based selection tool, e-Configure, enables you to select the best switch for your particular application in the easiest way possible.

Enclosed switch-disconnectors
Overview

Side operated, type BW_, LBAS_, KSF_, KSE_
- Degree of protection: IP65, IEC 60529
- Degree of protection without cover: IP20
- Enclosure in PBT (Thermoplastic polyester) plastic, high impact strength and chemical resistant
- Flame class UL94 5VA, Glow wire 850˚ (IEC 60695-2-12)
- Resistance against UV-radiation: F 1, UL 746C
- Standard IEC 60947-3 for Switch-disconnectors
- European Standard EN60204 Safety of machinery
- Cable outlets M sized threaded knock-outs
- 2-, 3-, 4-, and 6-pole versions
- Light grey/dark grey enclosure with grey handle
- Yellow enclosure have red handle
- Handle indication I-0/ON-OFF
- Suitable for 3-, 4- and 5-wire systems

Front operated, type OTP
- Degree of protection: IP65, IEC 60529
- Degree of protection without cover: IP20, IEC 60529
- Self-extinguishing plastic: UL94 V0
- Resistance against UV-radiation: F 1, UL 746C
- Standard IEC 60947-3 for Switch-disconnectors
- European Standard EN60204 Safety of machinery
- Cable outlets M sized threaded knock-outs
- Also blank gland plates available
- 3-, 4-, and 6-pole versions
- Black or red-yellow handle
- Handle indication I-0/ON-OFF
- Suitable for 4- and 5-wire systems

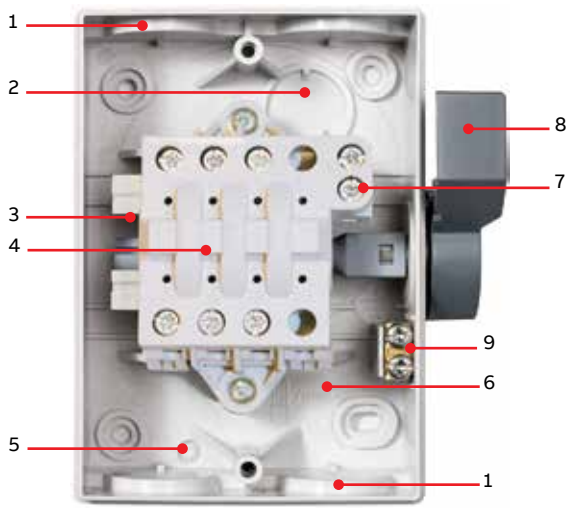

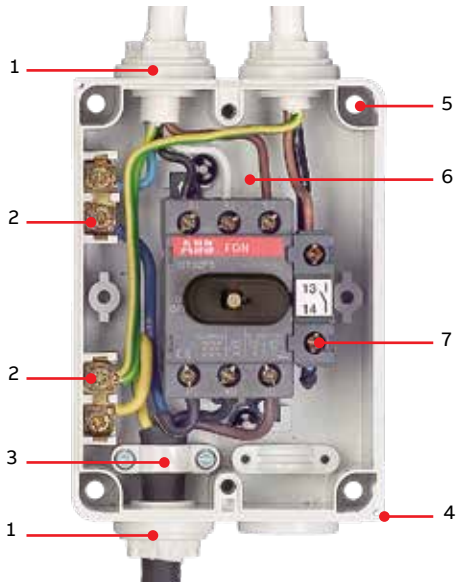

1 Metric threaded knockouts, IP54 cable glands sealing plugs included | 2 Knockout in the back of the box | 3 Space for auxiliary contacts, (N.O./N.C., to be ordered separately, included in some types) | 4 Handle, axis and switch insert is one system factory assembled. Switch insert UL94 V0 and glow wire 960˚ (IEC 60965-2-12) | 5 Knockout for ventilation / Water drain holes | 6 Cable strip length | 7 Isolated neutral terminal with separate in/out connection | 8 Handle padlockable in ”O” position as standard.Knockout for padlock in ”I” position. Shackle for 6 padlocks | 9 PE-terminal

1 Knock-out openings for M threads on the top and bottom, separate threaded knock-out opening for control wires in enclosure sizes Width 130 mm and larger | 2 Terminals for 5-wire system: three phases + N + PE terminals | 3 Pull stoppers for two cables in 16 A enclosed switches | 4 Provision for sealing of the lid | 5 Enclosure mounting screws isolated from the inside housing | 6 Knock-out opening on the base for incoming cables | 7 Space for auxiliary contacts, (N.O./N.C., to be ordered separately, included in some types)

Enclosed switch-disconnectors
Safe and dependable performance

Our enclosed switch-disconectors support you in creating a safe working environment, reducing the risk of electrical and mechanical accidents, especially during maintenance and repair work.



Enclosed switch-disconnectors with auxiliary contact and 'Safety Switch' -sticker are designed to be used near motors or machines to isolate them from the main circuit.

We offer the widest portfolio of IEC standard switches (from 16 to 1200 A) in both side and front operated, with a range of pole and cable configurations. We also offer a full range of enclosure materials, including plastic, aluminium, steel sheet, and acid-proof stainless steel to ensure you find the right enclosed switch-disconnectors for your application and operating environment.

Enclosed switch-disconnectors
For demanding operating conditions

Every aspect of our enclosed switch-disconnectors is designed for safety and dependable performance, even in demanding operating conditions. This helps ensure that machinery can't be accidentally started while maintenance is in progress.

Tried and tested performance
To ensure maximum safety, it is always good practice to use a separate switch for normal start and stop, and to use the enclosed switch-disconnector (safety switch) only during repair and maintenance. ABB's range of enclosed switch-disconnectors includes side and front operated enclosed switch-disconnectors from 16 to 1200 Amperes, with power ratings from 7.5 to 1200 kW up to 690 V. The ratings correspond to utilization category AC-23A.

As the overall naming for the product series, ABB is using Enclosed Switch Disconnectors. In different countries there are different terminology, like Safety switch, Isolator, Maintenance switch, etc. The standard IEC62626-1:2014 defines the name to Maintenance switch. In the enclosed switches where there are auxiliary contacts there is also the sticker for Safety switch.

Enclosures are available in plastic, aluminium, steel sheet, stainless steel sheet, and acid-proof material. The appropriate material can be selected according to preference or application. All our enclosed switch-disconnectors have been tested according to IEC 60947-3 standard. After rigorous testing, our switches have proven to maintain a high degree of safety.

The enclosed switch-disconnectors have either standard or as optional auxiliary contacts that can be used for electrical interlocking. This is done by connecting the enclosed switch-diconnector to a starter or other motor control devices. For the most extreme operational conditions, corrosion-resistant gold plated auxiliary contacts are available upon request.

Aluminium cables
The terminals in the switches cannot be directly connected to an aluminium wire due to electromechanical corrosion. Therefore, we recommend the use of compression type terminals made for aluminium wires, if aluminium cables are to be used.



Operating temperature
ABB enclosed switches can withstand an ambient temperature of -25°C to +40°C without derating. Please contact your local ABB dealer in case you need support with de-rating, due to higher temperatures.

Ensured EMC safety
ABB's design also takes into consideration the need for reliable performance in environments with electromagnetic disturbances (EMC), with full compliance with IEC 61000-6-3/4 or EN 55011, according to EU directive 2004/108/EC. Electro-magnetic compatibility (EMC) refers to the ability of a device to function despite electromagnetic disturbances in the environment without electro-magnetically disturbing other devices in its surroundings. This is important in environments where the disturbance from frequency converters may rise up to tens, or even hundreds of MHz.


SULFAT

Enclosed switch-disconnectors, 16...125 A
Table of contents

10	**Technical data**
17	**Ordering information**
17	Plastic enclosed safety switches and EMC switch-disconnectors
43	Steel sheet enclosed safety switches and EMC switch-disconnectors
71	Stainless steel sheet enclosed safety switches
82	Aluminium enclosed safety switches
91	ATEX enclosed safety switches
94	**Dimension drawings**
195	**Accessories**

Technical data

Enclosed switch-disconnectors, 16...125 A

Enclosed switch-disconnectors, ONE20_

Data according to IEC 60947-3				ONE20M2_	ONE20M3_	ONE20M4_
Impulse withstand voltage, Uimp			kV	6	6	6
Operating temperature				-30°C...+60°C	-30°C...+60°C	-30°C...+60°C
Rated operational voltage, Ue			V	240	415	415
Rated insulation voltage		Pollution degree 3	V	690	690	690
Rated thermal current and rated operational current AC20/DC20	Ambient 40°C		A	20	20	20
Rated operational current, AC-21A and AC-22A		240V	A	20	20	20
		up to 415V	A		20	20
Rated operational current , AC-23A		230V	A/kW	15.2/2.6	15.2/2.6	15.2/2.6
		up to 400V	A/kW		15.2/7.5	15.2/7.5
Rated operational current and power, AC-3A		230V	A/kW	11.3/2.2	11.3/2.2	11.3/2.2
		up to 400V	A/kW		11.3/5.5	11.3/5.5
Rated operational short circuit current, Ip (rms), with fuses			kA	1	1	1
Maximum back-up fuse link			A	20	20	20
Cu-wire size suitable for terminal			mm^2	0.5-4	0.5-4	0.5-4
Cable for compression glands, min-max diameter			mm	7-12	7-12	7-12

Enclosed switch-disconnectors with auxiliary contact and 'Safety switch' -sticker, types: BWS_and LBAS_

- Plastic enclosed, side-operated: BWS_
- Aluminium enclosed, side-operated and front-operated types: LBAS_

	Switch size		16	25	45	75	90
Plastic enclosed, side-operated	**Switch type**		**BWS**	**BWS**			
Aluminium enclosed, side-operated and front-operated types			**LBAS**	**LBAS**	**LBAS**	**LBAS**	**LBAS**
Rated Insulation voltage		V	690	690	750	750	750
Rated thermal current	40ºC	A	32	40	63	80	125
	60ºC	A			50	63	100
Rated operational power / current AC-23A	400V	kW/A	7.5/16	11/25	22/45	37/75	45/90
	500V	kW/A	7.5/16	15/25	22/45	37/58	45/70
	690V	kW/A	7.5/10	11/16	15/20	18.5/20	45/50
Conditional short circuit current		kA	25	25	50	50	50
Fuse protected short circuit making capacity	400V	kA	5	5	13	13	16.5
	500V	kA	4.8	4.8	11	11	10
	690V	kA	4.8	4.8	11	11	10
Max fuse	400V	A	50	50	63	80	125
	500V	A	35	35	63	80	63
	690V	A	35	35	63	80	63

Technical data

Enclosed switch-disconnectors, 16...125 A

Membrane glands/sealing plugs (included in BWS/LBAS)

Type	Protection class	Cable entries size/metric threads	Included in delivery [pcs]	For cable diam. [mm]
BW_16	IP54	M25	2	9...16
LBAS_16, KSE_25, KSF_25	IP54	M25	4	9...16
BW_616, 625	IP54	M25	3	9...16
	IP54	M16	1	6...11
BWS_25	IP54	M32	2	12...20
	IP54	M16	1	7...11
LBAS_25, KSF_40	IP54	M32	4	16...24
	IP54	M16	1	7...11
LBAS/KSE_45..._125	IP54	M40	4	19...25
	IP54	M16	1	6...11

For more information on switches and their applications, see OT switch-disconnectors catalogue.
Cabling, see page 16.
Terminal clamps for Al/Cu cables on page 209.

Enclosed switch-disconnectors (without auxiliary contacts), types BW_, KSE_

- Plastic enclosed, side-operated: BW_
- Aluminium enclosed, side-operated and front-operated types: KSE_

Data according to IEC60529 and IEC 60947-3	Switch size		16	25	40	40	63	80	125
Plastic enclosed, side-operated	Switch type		BW	BW	BW	BW			
Aluminium enclosed, side-operated and front-operated types				KSE	KSE2	KSE	KSE	KSE	KSE
Rated insulation voltage		V	690	690	690	690	750	750	750
Rated thermal current and rated operational current AC20/DC20	40ºC	A	16	25	40	40	63	80	125
	60ºC	A					50	64	100
Rated operational current, AC-21A and AC-22A	400V	A	16	25	40	40	63	80	100
	500V	A	16	25	40	40	63	80	100
	690V	A	16	16	32	32	63	80	100
Rated operational power and current, AC-23A	up to 415 V	kW/A	16	16	32	25	22/45	37/75	45/80
	440V	kW/A A	16	16	25	25	22/45	37/58	45/60
	500V	kW/A	10	16	25	25	15/20	18.5/20	45/40
	690V	kW/A	10	10	16	16	13	13	16.5
Rated conditional short-circuit current r.m.s and corresponding cut-off current of the fuse in single-phase test according to IEC60269	25kA, 500V	kA	4.8	4.8	4.8	4.8	100/80	100/80	125/125
	50kA, 415V	kA	50/50	50/50	50/50	50/50	13	13	16.5
	Fuse size: gG/aM	A					80/63	80/63	125/100
Rated frequency		Hz	50/60	50/60	50/60	50/60	50/60	50/60	50/60
Cu-wire size suitable for terminal Terminal bolt size		mm^2	1...10	1...10	1...10	1...10	1.5...35	1.5...35	10...70
Used switch type							OT63F3	OT80F3	OT125F3

Technical data

Enclosed switch-disconnectors, 16...125 A

Enclosed switch-disconnectors with auxiliary contact and 'Safety switch' -sticker, types:

- Plastic enclosed: OTP_H_, OTP_HT_, OTP_K_, OTP_T_, OTP_A_, OT_G_T, OT_G_A , EMC-switches: OTE_T_, OTE_A_
- Steel sheet enclosed: OTL_T_, OTL_A_, OT_G_TZ , OT_G_AZ, EMC-switches: OT_TE, OT_AE, OT_GT_ , OT_GU_
- Stainless steel enclosed: OTR_T_, OTR_A_, OT_G_TZ, OT_G_AZ

Data according to IEC 60947-3	Switch size		**16**	**25**	**36**	**63**	**75**	**90**	**90**	**125**
Plastic enclosed	Switch type		**OTP/OTE**	**OTP/OTE**	**OTP/OTE**	**OTP**	**OTP/OTE**	**OTP/OTE**	**OT_G**	**OT_G**
Steel sheet enclosed			**OTL, OT**	**OTL, OT**	**OTL, OT**	**OTL, OT**	**OTL**	**OTL**	**OT_G**	**OT_G**
Stainless steel enclosed			**OTR**	**OTR**	**OTR**	**OTR**	**OTR**	**OTR**	**OT_G**	**OT_G**
Rated Insulation voltage		V	750	750	750	750	750	750	750	750
Rated thermal current	40ºC	A	40	63	80	115	115	125	90	125
	60ºC	A	32	50	63	80	80	100	90	125
Rated operational power AC-23A	230V	kW/A	5.5/23	7.5/30	11/45	18.5/63	22/80	22/90	22/90	37/125
	400V	kW/A	7.5/16	15/30	22/45	30/63	37/80	45/90	45/90	55/125
	500V	kW/A	7.5/16	15/30	22/45	30/50	37/60	45/70	55/90	75/125
	690V	kW/A	7.5/10	15/20	15/20	30/35	37/40	45/50	75/90	110/125
Rated conditional short-circuit current r.m.s and corresponding cut-off current of the fuse in single-phase test according to IEC60269	50kA, 400V[1)]	kA	6.5	13	13	16.5	16.5	16.5	24	24
	Fuse size:	gG/aM	40/32	100/80	100/80	125/125	125/125	125/125	200/200	200/250
	50kA, 690V[1)]	kA	4	11	11	10	10	10	24	24
	Fuse size:	gG/aM	25/16	80/63	80/63	63/63	63/63	63/63	200/200	200/200
Cu-wire size, Terminal bolt size		mm^2	0.75...10	1.5...35	1.5...35	10...70	10...70	10...70	10...70	10...70
Used switch type			OT40_	OT63_	OT63_	OT100_	OT100_	OT125F_	OT160G_	OT160G_

Enclosed switch-disconnectors (without auxiliary contacts), types:

- Plastic enclosed: OTP_HB_, OTP_B_, OTP_BA_, OTU_B_, OTU_BA_
- Steel sheet enclosed: OTL_B_, OTL_BA_, OT_G_BZ
- Stainless steel enclosed: OTR_B_, OTR_BA_

Data according to IEC60529 and IEC 60947-3	Switch size		**16**	**25**	**32**	**45[1)]**	**63[1)]**	**100**	**125_**	**125**
Plastic enclosed	Switch type		**OTP**	**OTP**	**OTP**	**OTP**	**OTP**	**OTP/OTU**	**OTP/OTU**	
Steel sheet enclosed			**OT**	**OTL**	**OTL**	**OTL**	**OTL**	**OTL**	**OTL**	**OT_G**
Stainless steel enclosed			**OTR**	**OTR**	**OTR**	**OTR**	**OTR**	**OTR**	**OTR**	
Rated insulation voltage		V	750	750	750	750	750	750	750	750
Rated thermal current and rated operational current AC20/DC20	40ºC	A	25	32	40	63	80	115	125	125
	60ºC	A	20	25	32	50	63	80	100	125
Rated operational current AC-21A and AC-22A	up to 415V	A	16	25	40	63	80	100	125	125
	up to 500V	A	16	25	40	63	80	100	125	125
	690V	A	16	25	40	63	80	100	125	125
Rated operational current AC-23A	up to 415V	A	16	20	23	45	75	80	90	125
	440V	A	16	20	23	45	63	65	78	125
	500V	A	16	20	23	45	58	60	70	125
	690V	A	10	11	12	20	20	40	50	125
Rated conditional short-circuit current r.m.s and corresponding cut-off current of the fuse in single-phase test according to IEC60269	50kA, 415V	kA	6.5	6.5	6.5	13	13	16.5	18	24
	Fuse size:	gG/aM	40/32	40/32	40/32	100/80	100/80	125/125	125/100	125/100
	50kA, 690V	kA	4	4	4	11	11	10	12	24
	Fuse size:	gG/aM	25/16	25/16	25/16	80/63	80/63	63/63	125/100	125/100
Rated frequency		Hz	50/60	50/60	50/60	50/60	50/60	50/60	50/60	50/60
Cu-wire size, Terminal bolt size		mm^2	0.75...10	0.75...10	0.75...10[2)]	1.5...25[2)]	1.5...25[2)]	10...70	10...70	10...70
Used switch type			OT16_	OT25_	OT40_	OT63_	OT80_	OT100_	OT125G_	OT160G_

[1)] Lower ratings on plastic 6-pole versions. See ordering information.
[2)] Please note the maximum diameter of the cable is limited by the cable outlets. See the extension adapters in ordering information of accessories.

Technical data

Enclosed switch-disconnectors, 16...125 A

Aluminium enclosed enclosed switch-disconnectors with auxiliary contact and 'Safety switch' -sticker

Technical data according to IEC 60947-3

Type / size			OTA 16_	OTA 25_	OTA 40_	OTA 63_	LBAS _45_	LBAS _75_	LBAS _90_	OTA 125_
Rated insulation voltage		V	750	750	750	750	750	750	750	750
Rated thermal current and rated operational current AC20/DC20	40ºC	A	25	32	40	63	63	80	125	160
	60ºC	A	20	26	32	50	50	64	100	160
Rated operational power and current, AC-23A	up to 415V	kW/A	7.5/16	15/30	22/45	30/63	25/63	37/75	45/90	55/125
	up to 500V	kW/A	7.5/16	15/30	22/45	30/45	22/45	37/58	45/70	55/90
	690V	kW/A	7.5/10	15/20	15/20	18.5/20	15/20	18.5/20	45/50	55/70
Rated conditional short-circuit current r.m.s and corresponding cut-off current of the fuse in single-phase test according to IEC60269	50kA, 415V	kA	6.5	13	13	13	13	13	16.5	40.5
	Fuse size: gG/aM	A	40/32	100/80	100/80	100/80	100/80	100/80	125/100	315A/315A
	50kA, 690V	kA	6.5	13	13	13	13	13	16,5	40.5
	Fuse size: gG/aM	A	25/16	80/63	80/63	80/63	80/63	80/63	125/100	315A/315A
Rated frequency		Hz	50/60	50/60	50/60	50/60	50/60	50/60	50/60	50/60
Cu-wire size. Terminal bolt size		mm²	0.75...10	1.5...35	1.5...35	1.5...35	1.5...35	1.5...35	10...70	8
Used switch type			OT40F3	OT63F3	OT63F3	OT80F3	OT63F3	OT80F3	OT125F3	OT160EV12

Aluminium enclosed switch-disconnectors (without auxiliary contacts), type OKA_

Type / size			OKA16S_	OKA25S_	OKA40S_	OKA63S_
Rated insulation voltage		V	750	750	750	750
Rated thermal current and rated operational current, AC20/DC20	40ºC	A	25	32	40	80
	60ºC	A	20	26	32	64
Rated operational current, AC-21A and AC-22A	up to 415V	A	16	25	40	63
	up to 500V	A	16	25	40	63
	690V	A	16	25	40	63
Rated operational power and current, AC-23A	up to 415V	kW/A	7.5/16	11/20	11/23	22/63
	up to 500V	kW/A	7.5/16	11/20	11/23	22/45
	690V	kW/A	7.5/10	11/11	11/12	15/20
Rated conditional short-circuit current r.m.s and corresponding cut-off current of the fuse in single-phase test according to IEC60269	50kA, 415V	kA	6.5	6.5	6.5	13
	Fuse size: gG/aM	A	40/32	40/33	40/34	100/80
	50kA, 690V	kA	6.5	6.5	6.5	13
	Fuse size: gG/aM	A	25/16	25/17	25/18	80/63
Rated frequency		Hz	50/60	50/60	50/60	50/60
Cu-wire size suitable for terminal		mm²	0.75...10	0.75...10	0.75...10	1.5...35
Used switch type			OT40F3	OT63F3	OT63F3	OT80F3

Technical data

Enclosed switch-disconnectors, 16...125 A

Firemen enclosed switch-disconnectors, type KSF_

Data according to IEC60529 and IEC 60947-3	**Switch size**		**25**	**40**	**40**
Fireman switches, side-operated			**KSF**	**KSF2_**	**KSF_**
Rated insulation voltage		V	690	690	690
Rated thermal current and rated operational current AC20/DC20	40ºC	A	25	40	40
	60ºC	A			
Rated operational current, AC-21A and AC-22A	400V	A	25	40	40
	500V	A	25	40	40
	690V	A	16	32	32
Rated operational current, AC-23A	up to 415 V	A	16	32	25
	440V	A	16	25	25
	500V	A	16	25	25
	690V	A	10	16	16
Rated conditional short-circuit current r.m.s and corresponding cut-off current of the fuse in single-phase test according to IEC60269	25kA, 500V	kA	4.8	4.8	4.8
	50kA, 415V	kA	50/50	50/50	50/50
	Fuse size: gG/aM	A			
Rated frequency		Hz	50/60	50/60	50/60
Cu-wire size suitable for terminal		mm^2	1-10	1-10	1-10

Technical data

Enclosed switch-disconnectors, 16...125 A

ATEX enclosed enclosed switch-disconnectors with auxiliary contact and 'Safety switch' -sticker

Data according to IEC 60947-3	Switch type			OTA16_X	OTA25_X	OTA40_X	OTA63_X	OTA80_X	OTA100_X	OTA125_X
Rated insulation voltage and rated operational voltage AC20/DC20	Pollution degree 3	50 Hz 1 min.	V	750	750	750	750	750	750	750
Rated thermal current	Ambient 40 °C [2]		A	25	32	40	63	80	115	125
	Ambient 60 °C		A	20	25	32	50	63	80	100
Rated operational current, AC-23A		up to 415 V	A	16	20	23	63	75	80	90
		500 V	A	16	20	23	45	58	60	70
		690 V	A	10	11	12	20	20	40	50
Rated operational power, AC-23A (These values are given for guidance and may vary acc. to the motor manufacturer)		220...240 V	kW	3	4	5.5	11	22	22	22
		400...415 V	kW	7.5	9	11	22	37	37	45
		440...500 V	kW	7.5	9	11	22	37	37	45
		690 V	kW	7.5	9	11	15	18.5	37	45
Rated conditional short-circuit current Iq (r.m.s.) and corresponding max. Allowed cut-off current Îc of fuse. The cut-off current Îc referes to values listed by fuse manufacturers (single phase test acc. To IEC60269)	Iq 50kA, 415V	Îc	kA	6.5	6.5	6.5	13	13	16.5	16.5
	Max. OFA_fuse size	gG/aM	A/A	40/32	40/32	40/32	100/80	100/80	125/125	125/125
	Iq 100kA, 500V	Îc	kA	–	–	–	17	17	–	–
	Max. OFA_fuse size	gG/aM	A/A	–	–	–	100/80	100/80	–	–
	Iq 10kA, 690V	Îc	kA	–	–	–	–	–	8.2	8.2
	Max. OFA_fuse size	gG/aM	A/A	–	–	–	–	–	125/100	125/100
	Iq 50kA, 690V	Îc	kA	4	4	4	11	11	10	10
	Max. OFA_fuse size	gG/aM	A/A	25/16	25/16	25/16	80/63	80/63	63/63	63/63
Rated short-time withstand current	r.m.s. -value Icw	690 V, 1 s	kA	0.5	0.5	0.5	1	1.5	2.5	2.5
Cable size	Cu-wire size suitable for terminal clamps		mm^2	0.75...10	0.75...10	0.75...10	1.5...35	1.5...35	10...70	10...70

Technical data

Enclosed switch-disconnectors, 16...125 A

Cabling for enclosed switch-disconnectors

Steel sheet, stainless and aluminium enclosed switch disconnectors	Supply cable	Mounting accessories (to supply side)	Terminal clamp (N-pole)
	Amount of parallel cables, mm²	Terminals, busbars and terminal bolt set	Terminals, busbars and terminal bolt set
Cable entries from top and bottom			
Enclosed switch-disconnectors with auxiliary contact and 'Safety switch' -sticker, types			
KSE/LBAS_45_-63_, OTL/OTR63_3p-4p, OTL/OTR36_-45_ 6p	1x(16...50)	OZXT1 (max 63A)	
OT_75_, OT_90_	1x(16...50)	OZXT1 (max 63A)	
OT_75_, OT_90_, OTA100_, OTA125_	1x(10...70)	OZXL1+OTS125T3P	OZXB1/1
OT90_, OT125_	1x(10...70)	OZXL1+OTS160G1L3	
Enclosed switch-disconnectors (without auxiliary contacts), types			
OT125_	1x(10...70)	OZXB1/1	OZXB1/1
Cable entries from bottom			
Enclosed switch-disconnectors with auxiliary contact and 'Safety switch' -sticker, types			
OT90_, OT125_ Outgoing terminals only	1x(10...70)	OZXB1L	

Colour codes of the enclosures / Enclosed switch-disconnectors

Enclosure type	Colour code/cover	Colour code/box
Plastic enclosures		
BWS, BW, grey cover	RAL 7012	RAL 7035
BW, light grey cover	RAL 7035	RAL 7035
BWS, BW, yellow cover	RAL1021	RAL 7035
OTP, white enclosure	RAL9001	RAL9001
OTP and OT, grey enclosure	RAL 7035	RAL 7035
Steel sheet enclosures		
OTL	RAL 7035	RAL 7035
OT	NCS 1704-Y15R	NCS 1704-Y15R
Aluminium enclosures		
LBAS_16...90	RAL 7012	RAL 7035

Ordering Information

Plastic enclosed switch-disconnectors, 16...125 A

Type keys

Side-operated plastic enclosed switch-disconnectors, types BWS_ and BW_

Main type	
Plastic enclosed switch-disconnector (without auxiliary contacts)	**BW**
Plastic enclosed switch-disconnector with auxiliary contact and 'Safety switch' -sticker	**BWS**

Extras, otherwise not used	
Blank cover	**K**
Indicator lamp	**L**
Light grey cover (residential/commercial)	**W**
Yellow cover & red handle	**Y**



Poles	
2-pole	**2**
3-pole with neutral terminal	**3**
3-pole with switched neutral	**4**
6-pole	**6**

Rated Current
Ie AC-22A for enclosed switch-disconnector (without auxiliary contacts)
Ie AC-23A for enclosed switch-disconnector with auxiliary contact and 'Safety switch' sticker

Construction	
2-pole	**DP**
3-pole with neutral terminal	**TPN**
3-pole with switched neutral	**TPSN**

Front operated plastic enclosed switch-disconnectors, types OTP_ and OTE_

Main type	
Plastic enclosed switch-disconnector	**OTP**
EMC plastic enclosed switch-disconnectors	**OTE**

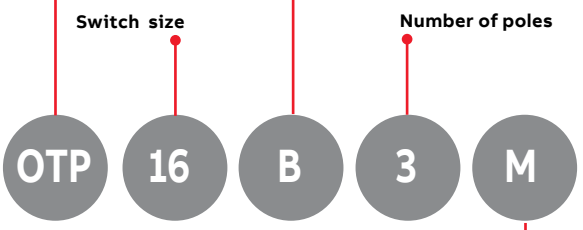

Cable outlets	
Metric cable outlets	**M**
Without cable openings	**U**
B-flange	**B**

Construction	
Enclosed switch-disconnector with auxiliary contact and 'Safety switch' sticker, red/yellow handle	**A**
Enclosed switch-disconnector with auxiliary contact and 'Safety switch' sticker, black handle	**T**
Enclosed switch-disconnector (without auxiliary contacts), black handle	**B**
Enclosed switch-disconnector (without auxiliary contacts), red/yellow handle	**BA**
Enclosed switch-disconnector (without auxiliary contacts), round black handle	**HB**
Enclosed switch-disconnector with auxiliary contact and 'Safety switch' sticker, round white handle	**H**
Enclosed switch-disconnector with auxiliary contact and 'Safety switch' sticker, round black handle	**HT**
Compact enclosed switch-disconnector with auxiliary contact and 'Safety switch' sticker, black handle	**K**
Compact enclosed switch-disconnector with auxiliary contact and 'Safety switch' sticker, red yellow handle	**KA**

Ordering Information

Plastic enclosed switch-disconnectors, 16...125 A

Type keys

Front operated plastic enclosed switch-disconnectors, type OT_

Type of enclosure and cable entry	
Plastic enclosure. Cable entry Top/Bottom	**F**
Plastic enclosure. Cable entry Bottom/Bottom	**G**

Enclosed switch-disconnector	
Enclosed switch-disconnector with auxiliary contact and 'Safety switch' sticker, black handle	**T**
Enclosed switch-disconnector with auxiliary contact and 'Safety switch' sticker, red/yellow handle	**A**
Enclosed switch-disconnector without auxiliary contact, black handle	**B**
Enclosed switch-disconnector without auxiliary contact, red/yellow handle	**BA**

Main type **Switch size** **Number of poles**

OT 90G F C C 3 T

Upper end configuration for the enclosure	
Space for II-flange	**C**

Lower end configuration for the enclosure	
Space for II-flange	**C**



Ordering information

Plastic enclosed switch-disconnectors, 16...125 A



ONE20M_G



ONE20M_Y



ONE20M_W

Enclosed switch-disconnectors 2-, 3- and 4-pole, IP67

The delivery includes a padlockable handle for 3 padlocks (I-O/ON-OFF). Threaded knock out holes for cable entry. Cover is not interlocked. The 2-pole types includes PE terminal. The 3- and 4-pole types include N and PE terminals. Does not include auxiliary contacts. Cable glands included.

Cable entries from top and bottom

Max. motor output/ AC-23A				Dimensions					Weight /unit
	415V	690V	Cable	Height	Width	Depth			
Poles	kW / A	kW / A	outlets/side	mm	mm	mm	Type	Order number	kg
Grey round handle									
2	2.6 / 15.2*	-	2xM20 / 2xM20	92	65	84	ONE20M2G	1SCA135532R1001	0.1
3	7.5 / 15.2	-		92	65	84	ONE20M3G	1SCA135535R1001	0.1
4	7.5 / 15.2	-		92	65	84	ONE20M4G	1SCA135538R1001	0.1
Red/yellow round handle									
2	2.6 / 15.2*	-	2xM20 / 2xM20	92	65	84	ONE20M2Y	1SCA135533R1001	0.1
3	7.5 / 15.2	-		92	65	84	ONE20M3Y	1SCA135536R1001	0.1
4	7.5 / 15.2	-		92	65	84	ONE20M4Y	1SCA135540R1001	0.1
White round handle									
2	2.6 / 15.2*	-	2xM20 / 2xM20	92	65	84	ONE20M2W	1SCA138456R1001	0.1
3	7.5 / 15.2	-		92	65	84	ONE20M3W	1SCA138457R1001	0.1
4	7.5 / 15.2	-		92	65	84	ONE20M4W	1SCA138459R1001	0.1

*) 220-240V

Ordering information

Plastic enclosed switch-disconnectors, 16...125 A



BW225DP



BW225WDP



BW240DP



BW240WDP

Side operated enclosed switch disconnectors, 2-pole, IP65

Enclosure in robust PBT plastic with metric threaded cable entries. Light grey box with dark or light grey cover and dark grey operating handle. Delivery includes PE terminal and membrane glands (IP54). The cover is interlocked.

Cable entries from top and bottom

Max. motor output/ AC-23A			Dimensions					Weight
415V	690V	Cable	Height	Width	Depth			/unit
kW/A	kW/A	outlets/side	mm	mm	mm	Type	Order number	kg
Auxiliary contacts included: none • Auxiliary contacts max: 1NO+0NC								
3.7 / 25*	-	2xM25 / 2xM25	130	111	60	BW225DP	2CMA142400R1000	0.3
3.7 / 25*	-		130	111	60	BW225WDP[1)]	2CMA142401R1000	0.3
7.5 / 32*	-	2xM32 / 2xM32+M16	168	138	68	BW240DP	2CMA142407R1000	0.4
7.5 / 32*	-		168	138	68	BW240WDP[1)]	2CMA100851R1000	0.4

*) 220-240V

[1)] Light grey cover

Ordering information

Plastic enclosed switch-disconnectors, 16...125 A



BWS325TPN



BWS316WFTPN



BWS425TPSN



BWS625TPN



BWS325YTPN



BWS425YTPN



BWS625YTPN

Side operated enclosed switch-disconnectors with auxiliary contact and 'Safety switch' -sticker, 3, 4 and 6-pole, IP65

Enclosure in robust thermoplastic (PBT). The safety switch comes complete with neutral, PE terminal, one N.O auxiliary contact, cable entries with metric threaded knock-outs, IP54 membrane glands. Cover interlock included.

Dark grey side-operated handle, dark grey cover

Cable entries from top and bottom

Max. motor output/ AC-23A		Cable outlets /side	Enclosure dimensions			Type	Order number	Weight /unit
415V	690V		Height	Width	Depth			
kW/A	kW/A		mm	mm	mm			kg
3-pole. Threaded knock-out openings, also for control cables. Auxiliary contacts included: 1NO • Auxiliary contacts max: 1NO								
7,5/16	7,5/10	2xM25/2xM25	130	111	60	BWS316TPN	2CMA142417R1000	0.3
11/25	11/16	2xM32/2xM32+M16	168	138	68	BWS325TPN	2CMA142420R1000	0.4
Auxiliary contacts included: not included • Auxiliary contacts max: 1NO								
7,5/16	7,5/10	2xM25/2xM25	130	111	60	BWS316FTPN	2CMA142440R1000	0.31
7,5/16	7,5/10	2xM25/2xM25	130	111	60	BWS316WFTPN[1)]	2CMA106219R1000	0.31

[1)] Light grey cover

4-pole. Threaded knock-out openings, also for control cables. Auxiliary contacts included: 1NO • Auxiliary contacts max: 1NO								
7,5/16	7,5/10	2xM25/2xM25	130	111	60	BWS416TPSN	2CMA142418R1000	0.32
11/25	11/16	2xM32/2xM32+M16	168	138	68	BWS425TPSN	2CMA142421R1000	0.42
6-pole. Threaded knock-out openings, also for control cables. Auxiliary contacts included: 1NO • Auxiliary contacts max: 1NO								
7,5/16	7,5/10	2xø25.5+ø16.5/ 2xø25.5+ø16.5	130	190	130	BWS616TPN	2CMA142419R1000	0.54
11/25	11/16		130	190	130	BWS625TPN	2CMA142422R1000	0.54

Red side-operated handle, yellow cover

Cable entries from top and bottom

Max. motor output/ AC-23A		Cable outlets /side	Enclosure dimensions			Type	Order number	Weight /unit
415V	690V		Height	Width	Depth			
kW/A	kW/A		mm	mm	mm			kg
3-pole. Threaded knock-out openings, also for control cables. Auxiliary contacts included: 1NO • Auxiliary contacts max: 1NO								
7,5/16	7,5/10	2xM25/2xM25	130	111	60	BWS316YTPN	2CMA142423R1000	0.32
11/25	11/16	2xM32/2xM32+M16	168	138	68	BWS325YTPN	2CMA142426R1000	0.41
4-pole. Threaded knock-out openings, also for control cables. Auxiliary contacts included: 1NO • Auxiliary contacts max: 1NO								
7,5/16	7,5/10	2xM25/2xM25	130	111	60	BWS416YTPSN	2CMA142424R1000	0.32
11/25	11/16	2xM32/2xM32+M16	168	138	68	BWS425YTPSN	2CMA142427R1000	0.42
6-pole. Threaded knock-out openings, also for control cables. Auxiliary contacts included: 1NO • Auxiliary contacts max: 1NO								
7,5/16	7,5/10	2xø25.5+ø16.5/ 2xø25.5+ø16.5	130	190	130	BWS616YTPN	2CMA142425R1000	0.54
11/25	11/16		130	190	130	BWS625YTPN	2CMA142428R1000	0.54

Compression glands or flanges to be ordered separately.

Ordering information

Plastic enclosed switch-disconnectors, 16...125 A



BW316TPN



BW325WTPN



BW340TPN



BW340WTPN



BW325KTPN



BW325LTPN

Side operated enclosed switch disconnectors, 3-pole, IP65

Enclosure in robust PBT plastic with metric threaded cable entries. Delivery includes neutral and PE terminal and membrane glands (IP54). The cover is interlocked.

Cable entries from top and bottom

Max. motor output/ AC-23A			Dimensions					
415V	690V	Cable	Height	Width	Depth			Weight /unit
kW/A	kW/A	outlets/side	mm	mm	mm	Type	Order number	kg
Light grey enclosure with dark grey or light grey cover and dark grey operating handle Auxiliary contacts included: none • Auxiliary contacts max: 1NO+0NC								
7.5 / 16	7.5 / 10	2xM25 / 2xM25	130	111	60	BW316TPN	2CMA142447R1000	0.3
7.5 / 16	7.5 / 10		130	111	60	BW325TPN	2CMA142403R1000	0.3
7.5 / 16	7.5 / 10		130	111	60	BW325WTPN[1)]	2CMA142402R1000	0.3
11 / 25	11 / 16	2xM32 / 2xM32+M16	168	138	68	BW340TPN	2CMA142408R1000	0.4
11 / 25	11 / 16		168	138	68	BW340WTPN[1)]	2CMA100852R1000	0.3

[1)] Light grey cover

Side operated enclosed switch disconnectors, 3-pole, IP65

Enclosure in robust PBT plastic with metric threaded cable entries. Delivery includes PE + neutral terminal and membrane glands / sealing plugs (IP54). _L_ type includes signal lamp.

Cable entries from top and bottom

Max. motor output/ AC-23A			Dimensions					
415V	690V	Cable	Height	Width	Depth			Weight /unit
kW/A	kW/A	outlets/side	mm	mm	mm	Type	Order number	kg
Light grey enclosure and cover with dark grey operating handle Auxiliary contacts included: none • Auxiliary contacts max: 1NO+0NC								
7.5 / 16	7.5 / 10	2xM25 / 2xM25	130	111	60	BW325KTPN	2CMA142443R1000	0.3
7.5 / 16	7.5 / 10		130	111	60	BW325LTPN	2CMA142404R1000	0.3

Ordering information

Plastic enclosed switch-disconnectors, 16...125 A



BW425TPSN



BW325WTPSN



BW440TPSN



BW340WTPSN



BW625TPN

Side operated enclosed switch disconnectors, 4-pole, IP65

Enclosure in robust PBT plastic with metric threaded cable entries. Delivery includes PE and switchable neutral terminal and membrane glands (IP54). The cover is interlocked.

Cable entries from top and bottom

Max. motor output/ AC-23A			Dimensions					
415V	690V	Cable	Height	Width	Depth			Weight /unit
kW/A	kW/A	outlets/side	mm	mm	mm	Type	Order number	kg
Light grey enclosure with dark grey or light grey cover and dark grey operating handle Auxiliary contacts included: none • Auxiliary contacts max: 1NO+0NC								
7.5 / 16	7.5 / 10	2xM25 / 2xM25	130	111	60	BW425TPSN	2CMA142405R1000	0.3
7.5 / 16	7.5 / 10		130	111	60	BW425WTPSN[1)]	2CMA100850R1000	0.3
11 / 25	11 / 16	2xM32 / 2xM32+M16	168	138	68	BW440TPSN	2CMA142409R1000	0.4
15 / 32	15 / 16		168	138	68	BW440WTPSN[1)]	2CMA100853R1000	0.3

[1)] Light grey cover

Side operated enclosed switch disconnectors, 6-pole, IP65

Enclosure in robust PBT plastic with non-threaded cable entries. Delivery includes PE+neutral terminal and membrane glands (IP54).

Cable entries from top and bottom

Max. motor output/ AC-23A			Dimensions					
415V	690V	Cable	Height	Width	Depth			Weight /unit
kW/A	kW/A	outlets/side	mm	mm	mm	Type	Order number	kg
Light grey box with dark grey cover and operating handle Auxiliary contacts included: none • Auxiliary contacts max: 1NO+0NC								
7.5 / 16	7.5 / 10	2xø25.5+ø16.5/ 2xø25.5+ø16.5	130	190	130	BW625TPN	2CMA142406R1000	0.5
11 / 25	11 / 16		130	190	130	BW640TPN	2CMA142410R1000	0.5

Ordering information

Plastic enclosed switch-disconnectors, 16...125 A



BW325YTPN, BW340YTPN

Side operated enclosed switch-disconnectors, 3-pole, red-yellow, IP65

The delivery includes PE+neutral terminal and membrane glands (IP54) . Handle with cover interlock function. Enclosure in robust PBT plastic with metric threaded cable entries. Light grey box with yellow cover and red operating handle.

Cable entries from top and bottom

Max. motor output/ AC-23A			Dimensions					Weight
415V	690V	Cable	Height	Width	Depth			/unit
kW/A	kW/A	outlets/side	mm	mm	mm	Type	Order number	kg
Auxiliary contacts included: none • Auxiliary contacts max: 1NO								
7.5 / 16	7.5 / 10	2xM25 / 2xM25	130	111	60	BW325YTPN	2CMA142441R1000	0.3
11 / 25	11 / 16	2xM32 / 2xM32+M16	168	138	68	BW340YTPN	2CMA142445R1000	0.4



BW425YTPN, BW440YTPN

Side operated enclosed switch-disconnectors, 4-pole, red-yellow, IP65

The delivery includes PE-terminal and membrane glands (IP54) . Handle with cover interlock function. Enclosure in robust PBT plastic with metric threaded cable entries. Light grey box with yellow cover and red operating handle.

Cable entries from top and bottom

Max. motor output/ AC-23A			Dimensions					Weight
415V	690V	Cable	Height	Width	Depth			/unit
kW/A	kW/A	outlets/side	mm	mm	mm	Type	Order number	kg
Auxiliary contacts included: none • Auxiliary contacts max: 1NO								
7.5 / 16	7.5 / 10	2xM25 / 2xM25	130	111	60	BW425YTPN	2CMA142444R1000	0.3
11 / 25	11 / 16	2xM32 / 2xM32+M16	168	138	68	BW440YTPN	2CMA142446R1000	0.4

Ordering information

Plastic enclosed switch-disconnectors, 16...125 A



OTP16H3M25,



OTP16HT3M
OTP16HT3M25,
OTP16HT3M251



OTP16K3M,
OTP16K3M25



OTP16KA3M,
OTP16KA3M25

Enclosed switch-disconnectors with auxiliary contact and 'Safety switch' -sticker, 3-pole, IP65, white handle

The delivery includes a selector handle (I-O/ON-OFF), N- and PE-terminals, two membrane cable glands (IP54), two pull stoppers and auxiliary contacts according to the table below. White enclosure (RAL9001), cable entries from top and bottom. The rectangular handle has defeatable interlocking included. The round handle does not have defeatable interlocking.

Cable entries from top and bottom

Max. motor output/ AC-23A			Enclosure dimensions					Weight
415V	690V	Cable outlets/	Height	Width	Depth			/unit
kW/A	kW/A	side	mm	mm	mm	Type	Order number	kg
White round handle Auxiliary contacts: mounted 1NO								
7.5/16	7.5/10	2xM25/2xM25	120	85	60	OTP16H3M25	1SCA022699R3000	0.4
Black round handle Auxiliary contacts: mounted 1NO								
7.5/16	7.5/10	2xM20/2xM20	120	85	60	OTP16HT3M	1SCA022400R9410	0.4
7.5/16	7.5/10	2xM25/2xM25	120	85	60	OTP16HT3M25	1SCA022699R3770	0.4
7.5/16	7.5/10		120	85	60	OTP16HT3M251[1]	1SCA022699R4070	0.4
Black rectangular handle Auxiliary contacts: mounted 1NO								
7.5/16	7.5/10	2xM20 / 2xM20	120	85	60	OTP16K3M*	1SCA022400R9830	0.4
7.5/16	7.5/10	2xM25/2xM25	120	85	60	OTP16K3M25	1SCA022699R4310	0.4
Red-yellow rectangular handle Auxiliary contacts: mounted 1NO								
7.5/16	7.5/10	2xM20 / 2xM20	120	85	60	OTP16KA3M	1SCA022399R6590	0.4
7.5/16	7.5/10	2xM25/2xM25	120	85	60	OTP16KA3M25	1SCA022699R4580	0.4

[1] Does not contain auxiliary contact.
* Also available with lockable handle in On-position

Ordering information

Plastic enclosed switch-disconnectors, 16...125 A



OTP16T3M



OTP25...63T3M



OTP75...90T3M



OTP75...90T3U



OT90...125GFCC3T

Enclosed switch-disconnectors with auxiliary contact and 'Safety switch' -sticker, 3-pole, IP65, black handle

The delivery includes a black selector handle (I-O/ON-OFF), N and PE-terminal, knock-out openings and auxiliary contacts according to the table below. Grey enclosure. Cover interlock and defeatable interlock included.

Cable entries from top and bottom

Max. motor output/ AC-23A			Enclosure dimensions					
415V	690V	Cable outlets	Height	Width	Depth			Weight /unit
kW/A	kW/A	/side	mm	mm	mm	Type	Order number	kg
Cable outlet type: Threaded knock-out Auxiliary contacts included: 1NO • Auxiliary contacts max: 2NO+2NC								
7,5/16	7,5/10	2xM25+M16/2xM25+M16	150	130	60	OTP16T3M*	1SCA022400R9910	0.5
15/30	15/20	2xM32+M16/2xM32+M16	200	145	90	OTP25T3M	1SCA022401R0090	0.9
22/45	15/20		200	145	90	OTP36T3M	1SCA022401R0170	0.9
30/63	30/35		200	145	90	OTP63T3M	1SCA022608R2910	1
37/80	37/40	2xM50+M16/2xM50+M16	400	200	140	OTP75T3M	1SCA022812R2890	2.4
45/90	45/50		400	200	140	OTP90T3M	1SCA022812R2970	2.4
Cable outlet type: Blank Auxiliary contacts included: 1NO • Auxiliary contacts max: 2NO+2NC								
37/80	37/40	Blank/Blank	400	200	140	OTP75T3U	1SCA022401R0250	2.4
45/90	45/50		400	200	140	OTP90T3U	1SCA022430R0760	2.4
Cable outlet type: Knockout Auxiliary contacts included: 1NO • Auxiliary contacts max: 2NO+2NC								
37/80	37/40	I-flange / I-flange	400	200	140	OTP75T3B	1SCA022371R2910	2.4
45/90	45/50		400	200	140	OTP90T3B	1SCA022429R3450	2.4

* Also available with lockable handle in On-position

Enclosed switch-disconnectors with auxiliary contact and 'Safety switch' -sticker, 3-pole, IP65, black handle

The delivery includes a black pistol handle (I-O/ON-OFF), PE-terminal, knock-out openings and auxiliary contacts according to the table below. Grey enclosure. Cover interlock and defeatable interlock included.

Cable entries from top and bottom

Max. motor output/ AC-23A			Enclosure dimensions					
415V	690V	Cable outlets/	Height	Width	Depth			Weight /unit
kW/A	kW/A	side	mm	mm	mm	Type	Order number	kg
Cable outlet type: Threaded knock-out Auxiliary contacts included: 1NO • Auxiliary contacts max: 2NO+2NC								
45/90	75/90	II-flange/	380	280	130	OT90GFCC3T	1SCA148610R1001	3.4
55/125	110/125	II-flange	380	280	130	OT125GFCC3T	1SCA148608R1001	3.4

Compression glands or flanges to be ordered separately.

Ordering information

Plastic enclosed switch-disconnectors, 16...125 A



OTP16A3M



OTP25...63A3M



OTP75...90A3M



OTP75...90A3U



OT90...125GFCC3A

Enclosed switch-disconnectors with auxiliary contact and 'Safety switch' -sticker, 3-pole, IP65, red-yellow handle

The delivery includes a red-yellow handle (I-O/ON-OFF), PE-terminal, knock-out openings and auxiliary contacts according to the table below. Grey enclosure. Cover interlock and defeatable interlock included.

Cable entries from top and bottom

Max. motor output/ AC-23A			Enclosure dimensions					
415V	690V	Cable outlets	Height	Width	Depth			Weight /unit
kW/A	kW/A	/side	mm	mm	mm	Type	Order number	kg
Selector handle								
N-terminal included. Threaded knock-out openings, also for control cables. Auxiliary contacts included: 1NO • Auxiliary contacts max: 2NO+2NC								
7,5/16	7,5/10	2xM25+M16/2xM25+M16	150	130	85	OTP16A3M	1SCA022399R6750	0.5
15/30	15/20	2xM32+M16/2xM32+M16	200	145	90	OTP25A3M	1SCA022399R6670	0.9
22/45	15/20		200	145	90	OTP36A3M	1SCA022399R6830	0.9
30/63	30/35		200	145	90	OTP63A3M	1SCA022613R1200	1
37/80	37/40	2xM50+M16/2xM50+M16	400	200	140	OTP75A3M	1SCA022812R3430	2.4
45/90	45/50		400	200	140	OTP90A3M	1SCA022812R3510	2.4
N-terminal included. Cable outlet type: Blank Auxiliary contacts included: 1NO • Auxiliary contacts max: 2NO+2NC								
37/80	37/40	Blank/Blank	400	200	140	OTP75A3U	1SCA022401R0410	2.4
45/90	45/50		400	200	140	OTP90A3U	1SCA022430R1060	2.4
N-terminal included. Cable outlet type: knock-out. Auxiliary contacts included: 1NO • Auxiliary contacts max: 2NO+2NC								
37/80	37/40	I-flange / I-flange	400	200	140	OTP75A3B	1SCA022382R0550	2.4
45/90	45/50		400	200	140	OTP90A3B	1SCA022430R0410	2.4
Auxiliary contacts included: 2NO+0NC • Auxiliary contacts max: 2NO+2NC								
45/90	75/90	II-flange/II-flange	380	280	130	OT90GFCC3A	1SCA148609R1001	3.4
Auxiliary contacts included: 2NO+0NC • Auxiliary contacts max: 2NO+2NC								
55/125	110/125	II-flange/II-flange	380	280	130	OT125GFCC3A	1SCA148607R1001	3.4

Compression glands or flanges to be ordered separately.

Ordering information

Plastic enclosed switch-disconnectors, 16...125 A



OTP16HB3M, OTP16HB3M25



OTP16B3M, OTP16B3M25



OTP25...32B3M



OTP45...63B3M



OTP100...125B3M



OTP100...125B3U

Enclosed switch-disconnectors, 3-pole, black handle, IP65

The delivery includes a handle (I-O/ON-OFF), N- and PE-terminals. The products with round handle have interlocked cover. The products with selector handle and pistol handle have interlocked cover and defeatable interlock.

Cable entries from top and bottom

Max. motor output/ AC-23A			Dimensions					Weight /unit
415V	690V	Cable	Height	Width	Depth			
kW/A	kW/A	outlets/side	mm	mm	mm	Type	Order number	kg
Round handle Two membrane cable glands and two pull stoppers. Threaded knock-outs. Auxiliary contacts included: none • Auxiliary contacts max: 1NO+1NC								
7.5 / 16	7.5 / 10	2xM20 / 2xM20	120	85	60	OTP16HB3M	1SCA022401R2970	0.4
7.5 / 16	7.5 / 10	2xM25 / 2xM25	120	85	60	OTP16HB3M25	1SCA022699R3690	0.4
Selector handle Two membrane cable glands and two pull stoppers. Threaded knock-outs. Auxiliary contacts included: none • Auxiliary contacts max: 1NO+1NC								
7.5 / 16	7.5 / 10	2xM20 / 2xM20	120	85	60	OTP16B3M*	1SCA022383R2130	0.4
7.5 / 16	7.5 / 10	2xM25 / 2xM25	120	85	60	OTP16B3M25	1SCA022699R2880	0.4
Selector handle Auxiliary contacts included: none • Auxiliary contacts max: 2NO+2NC								
9 / 20	9 / 11	2xM25+M16 / 2xM25+M16	150	130	60	OTP25B3M	1SCA022383R2640	0.5
11 / 23	11 / 12		150	130	60	OTP32B3M	1SCA022389R8400	0.5
22 / 45	15 / 20	2xM32+M16 / 2xM32+M16	200	145	90	OTP45B3M	1SCA022383R3020	0.9
37 / 75	18.5 / 20		200	145	90	OTP63B3M	1SCA022383R3450	0.9
37 / 80	37 / 40	2xM50+M16 / 2xM50+M16	400	200	140	OTP100B3M	1SCA126054R1001	2.4
45 / 90	45 / 50		400	200	140	OTP125B3M	1SCA022812R7180	2.4
Selector handle Auxiliary contacts included: none • Auxiliary contacts max: 2NO+2NC								
9 / 20	9 / 11	Blank / Blank	150	130	60	OTP25B3U	1SCA103605R1001	0.5
22 / 45	15 / 20		200	145	90	OTP45B3U	1SCA022629R2120	0.9
37 / 75	18.5 / 20		200	145	90	OTP63B3U	1SCA103703R1001	0.9
37 / 80	37 / 40		400	200	140	OTP100B3U	1SCA126056R1001	2.4
45 / 90	45 / 50		400	200	140	OTP125B3U	1SCA022401R3270	2.4
Auxiliary contacts included: none • Auxiliary contacts max: 2NO+2NC								
37 / 80	37 / 40	I-flange / I-flange	400	200	140	OTP100B3B	1SCA126055R1001	2.4
45 / 90	45 / 50	I-flange / I-flange	400	200	140	OTP125B3B	1SCA022383R3700	2.4

* Also available with lockable handle in On-position

Threaded knock-outs, compression glands have to be ordered separately
Knock-out flanges, flanges have to be ordered separately.

Ordering information

Plastic enclosed switch-disconnectors, 16...125 A



OTP16BA3M,
OTP16BA3M25



OTP25...32BA3M



OTP45...63BA3M



OTP100...125BA3M



OTP100...125BA3U

Enclosed switch-disconnectors, 3-pole, red-yellow handle, IP65

The delivery includes a handle (I-O/ON-OFF), N- and PE-terminals.
Includes red-yellow handle with cover interlock and defeatable interlock function.

Cable entries from top and bottom

Max. motor output/ AC-23A			Dimensions					Weight
415V	690V	Cable	Height	Width	Depth			/unit
kW/A	kW/A	outlets/side	mm	mm	mm	Type	Order number	kg
Selector handle. Two membrane cable glands and two pull stoppers. Auxiliary contacts included: none • Auxiliary contacts max: 1NO+1NC								
7.5 / 16	7.5 / 10	2xM20 / 2xM20	120	85	60	OTP16BA3M	1SCA022401R3350	0.4
7.5 / 16	7.5 / 10	2xM25 / 2xM25	120	85	60	OTP16BA3M25	1SCA022699R2960	0.4
Selector handle Auxiliary contacts included: none • Auxiliary contacts max: 2NO+2NC								
9 / 20	9 / 11	2xM25+M16 / 2xM25+M16	150	130	85	OTP25BA3M	1SCA022401R3430	0.5
11 / 23	11 / 12		150	130	85	OTP32BA3M	1SCA022401R3510	0.5
22 / 45	15 / 20	2xM32+M16 / 2xM32+M16	200	145	90	OTP45BA3M	1SCA022401R3600	0.9
37 / 75	18.5 / 20		200	145	90	OTP63BA3M	1SCA022401R3780	0.9
37 / 80	37 / 40	2xM50+M16 / 2xM50+M16	400	200	140	OTP100BA3M	1SCA126069R1001	2.4
45 / 90	45 / 50		400	200	140	OTP125BA3M	1SCA022812R7420	2.4
Selector handle Auxiliary contacts included: none • Auxiliary contacts max: 2NO+2NC								
37 / 80	37 / 40	Blank / Blank	400	200	140	OTP100BA3U	1SCA126057R1001	2.4
45 / 90	45 / 50		400	200	140	OTP125BA3U	1SCA022401R3940	2.4
Auxiliary contacts included: none • Auxiliary contacts max: 2NO+2NC								
37 / 80	37 / 40	I-flange / I-flange	400	200	140	OTP100BA3B	1SCA126067R1001	2,4
45 / 90	45 / 50		400	200	140	OTP125BA3B	1SCA022389R7420	2,4

Knock-out flanges, flanges have to be ordered separately.
Threaded knock-outs, compression glands have to be ordered separately.

Ordering information

Plastic enclosed switch-disconnectors, 16...125 A



OTP16T4M



OTP25...63T4M



OTP75...90T4M



OTP75...90T4U



OT125GFCC4T

Enclosed switch-disconnectors with auxiliary contact and 'Safety switch' -sticker, 4-pole, IP65, black handle

The delivery includes a black handle (I-O/ON-OFF), PE-terminals, knock-out openings and auxiliary contacts according to the table below. Cover interlock and defeatable interlock included.

Cable entries from top and bottom

Max. motor output/ AC-23A			Enclosure dimensions					
415V	690V	Cable outlets/	Height	Width	Depth			Weight /unit
kW/A	kW/A	side	mm	mm	mm	Type	Order number	kg
Selector handle								
N-terminal included. Threaded knock-out openings, also for control cables. Auxiliary contacts included: 1NO • Auxiliary contacts max: 2NO+2NC								
7,5/16	7,5/10	2xM25+M16/ 2xM25+M16	150	130	60	OTP16T4M	1SCA022401R0500	0.53
15/30	15/20	2xM32+M16/ 2xM32+M16	200	145	90	OTP25T4M	1SCA022401R0680	0.96
22/45	15/20		200	145	90	OTP36T4M	1SCA022401R0760	0.96
30/63	30/35		200	145	90	OTP63T4M	1SCA150558R1001	1.1
37/80	37/40	2xM50+M16/ 2xM50+M16	400	200	140	OTP75T4M	1SCA022812R3010	2.5
45/90	45/50		400	200	140	OTP90T4M	1SCA022812R3190	2.5
N-terminal included. Cable outlet type: Blank Auxiliary contacts included: 1NO • Auxiliary contacts max: 2NO+2NC								
37/80	37/40	Blank/Blank	400	200	140	OTP75T4U	1SCA022401R0840	2.5
45/90	45/50		400	200	140	OTP90T4U	1SCA022430R1570	2.5
Pistol handle								
Cable outlet type: knock-out Auxiliary contacts included: 1NO • Auxiliary contacts max: 2NO+2NC								
37/80	37/80	I-flange / I-flange	400	200	140	OTP75T4B	1SCA022383R0860	2.5
45/90	45/50		400	200	140	OTP90T4B	1SCA022430R1310	2.5
Auxiliary contacts included: 1NO+1NC • Auxiliary contacts max: 2NO+2NC								
55/125	110/125	II-flange/II-flange	380	280	130	OT125GFCC4T	1SCA148612R1001	3.6

Compression glands or flanges to be ordered separately.

Ordering information

Plastic enclosed switch-disconnectors, 16...125 A



OTP16A4M



OTP25...63A4M



OTP75...90A4M



OTP75...90A4U



OT125GFCC4A

Enclosed switch-disconnectors with auxiliary contact and 'Safety switch' -sticker, 4-pole, IP65, red-yellow handle

The delivery includes a red-yellow handle (I-O/ON-OFF), N- and PE-terminals, knock-out openings and auxiliary contacts according to the table below. Grey enclosure. Cover interlock and defeatable interlock included.

Cable entries from top and bottom

Max. motor output/ AC-23A			Enclosure dimensions					
415V	690V	Cable outlets	Height	Width	Depth			Weight /unit
kW/A	kW/A	/side	mm	mm	mm	Type	Order number	kg
Selector handle								
Threaded knock-out openings, also for control cables. Auxiliary contacts included: 1NO • Auxiliary contacts max: 2NO+2NC								
7,5/16	7,5/10	2xM25+M16/2xM25+M16	150	130	60	OTP16A4M	1SCA022401R1060	0.53
15/30	15/20	2xM32+M16/2xM32+M16	200	145	90	OTP25A4M	1SCA022401R1220	0.96
22/45	15/20		200	145	90	OTP36A4M	1SCA022401R1490	0.96
30/63	30/35		200	145	90	OTP63A4M	1SCA150557R1001	1
37/80	37/40	2xM50+M16/2xM50+M16	400	200	140	OTP75A4M	1SCA022812R3780	2.5
45/90	45/50		400	200	140	OTP90A4M	1SCA022812R3860	2.3
Cable outlet type: blank. Auxiliary contacts included: 1NO • Auxiliary contacts max: 2NO+2NC								
37/80	37/40	Blank/Blank	400	200	140	OTP75A4U	1SCA022401R1650	2.5
45/90	45/50		400	200	140	OTP90A4U	1SCA022430R2030	2.5
Pistol handle								
Cable outlet type: knock-out Auxiliary contacts included: 1NO • Auxiliary contacts max: 2NO+2NC								
37/80	37/40	I-flange / I-flange	400	200	140	OTP75A4B	1SCA022401R1570	2.5
45/90	45/50		400	200	140	OTP90A4B	1SCA022430R1900	2.5
Auxiliary contacts included: 1NO+1NC • Auxiliary contacts max: 2NO+2NC								
55/125	110/125	II-flange/II-flange	380	280	130	OT125GFCC4A	1SCA148611R1001	3.6

Compression glands or flanges to be ordered separately.

Ordering information

Plastic enclosed switch-disconnectors, 16...125 A



OTP16...32B4M



OTP45...63B4M



OTP125B4M

Enclosed switch-disconnectors, 4-pole, black handle, IP65

The delivery includes a handle (I-O/ON-OFF), N- and PE-terminals.
Includes black handle with cover interlock and defeatable interlock function.

Cable entries from top and bottom

Max. motor output/ AC-23A			Dimensions					
415V	690V	Cable	Height	Width	Depth			Weight /unit
kW/A	kW/A	outlets/side	mm	mm	mm	Type	Order number	kg
Selector handle Auxiliary contacts included: none • Auxiliary contacts max: 2NO+2NC								
7.5 / 16	7.5 / 10	2xM25+M16 / 2xM25+M16	150	130	60	OTP16B4M	1SCA022401R4160	0.6
9 / 20	9 / 11		150	130	60	OTP25B4M	1SCA022401R4320	0.6
11 / 23	11 / 12		150	130	60	OTP32B4M	1SCA022401R4590	0.6
22 / 45	15 / 20	2xM32+M16 / 2xM32+M16	200	145	90	OTP45B4M	1SCA022401R4750	1.0
37 / 75	18.5 / 20		200	145	90	OTP63B4M	1SCA022401R4910	1.0
45 / 90	45 / 50	2xM50+M16 / 2xM50+M16	400	200	140	OTP125B4M	1SCA022812R7260	2.5
Selector handle. Blank cable entry. Auxiliary contacts included: none • Auxiliary contacts max: 2NO+2NC								
9 / 20	9 / 11	Blank / Blank	150	130	60	OTP25B4U	1SCA111455R1001	0.6
22 / 45	15 / 20		200	145	90	OTP45B4U	1SCA115872R1001	1.0
37 / 75	18.5 / 20		200	145	90	OTP63B4U	1SCA116044R1001	1.0
45 / 90	45 / 50		400	200	140	OTP125B4U	1SCA022401R5300	2.5
Auxiliary contacts included: none • Auxiliary contacts max: 2NO+2NC								
45 / 90	45 / 50	I-flange / I-flange	400	200	140	OTP125B4B	1SCA022401R5210	2,5
45 / 90	45 / 50		400	200	140	OTP125BA4B	1SCA022571R8510	2,5

Threaded knock-outs, compression glands have to be ordered separately.
Knock-out flanges, flanges have to be ordered separately.

Ordering information

Plastic enclosed switch-disconnectors, 16...125 A



OTP16...32BA4M



OTP45...63BA4M



OTP125BA4M



OTP125BA4U

Enclosed switch-disconnectors, 4-pole, red-yellow handle, IP65

The delivery includes a red-yellow handle (I-O/ON-OFF) with cover interlock and defeatable interlock function, N- and PE-terminals.

Cable entries from top and bottom

Max. motor output/ AC-23A			Dimensions					Weight
415V	690V	Cable	Height	Width	Depth			/unit
kW/A	kW/A	outlets/side	mm	mm	mm	Type	Order number	kg
Selector handle Auxiliary contacts included: none • Auxiliary contacts max: 2NO+2NC								
7.5 / 16	7.5 / 10	2xM25+M16 / 2xM25+M16	150	130	85	OTP16BA4M	1SCA022459R6510	0.6
9 / 20	9 / 11		150	130	85	OTP25BA4M	1SCA022459R6600	0.7
11 / 23	11 / 12		150	130	85	OTP32BA4M	1SCA022459R6780	0.8
22 / 45	15 / 20	2xM32+M16 / 2xM32+M16	200	145	90	OTP45BA4M	1SCA022459R6860	1.0
37 / 75	18.5 / 20		200	145	90	OTP63BA4M	1SCA022459R6940	1.0
45 / 90	45 / 50	2xM50+M16 / 2xM50+M16	400	200	140	OTP125BA4M	1SCA022812R7510	2.5
Selector handle Auxiliary contacts included: none • Auxiliary contacts max: 2NO+2NC								
45 / 90	45 / 50	Blank / Blank	400	200	140	OTP125BA4U	1SCA022459R7160	2.5

Threaded knock-outs, compression glands have to be ordered separately.
Knock-out flanges, flanges have to be ordered separately.

Ordering information

Plastic enclosed switch-disconnectors, 16...125 A



OTP16T6M



OTP25...36T6M



OTP75...90T6M



OTP75...90T6U



OT90...125GFCC6T

Enclosed switch-disconnectors with auxiliary contact and 'Safety switch' -sticker, 6-pole, IP65, black handle

The delivery includes a black handle (I-O/ON-OFF), PE-terminals, knock-out openings and auxiliary contacts according to the table below. Grey enclosure. Cover interlock and defeatable interlock included.

Cable entries from top and bottom

Max. motor output/ AC-23A			Enclosure dimensions					
415V	690V	Cable outlets	Height	Width	Depth			Weight /unit
kW/A	kW/A	/side	mm	mm	mm	Type	Order number	kg
Selector handle								
N-terminal included. Threaded knock-out openings, also for control cables. Auxiliary contacts included: 1NO • Auxiliary contacts max: 2NO+1NC								
7,5/16	7,5/10	2xM25+M16/ 2xM25+M16	150	130	85	OTP16T6M	1SCA022401R1730	0.7
Pistol handle								
N-terminal included. Threaded knock-out openings, also for control cables. Auxiliary contacts included: 1NO • Auxiliary contacts max: 1NO+1NC								
15/30	15/20	2xM32+M16/ 2xM32+M16	200	145	90	OTP25T6M	1SCA022401R1810	1.2
22/45	15/20		200	145	90	OTP36T6M	1SCA022401R1900	1.2
Auxiliary contacts included: 1NO • Auxiliary contacts max: 2NO+2NC								
37/80	37/40	2xM50+M16/ 2xM50+M16	400	200	140	OTP75T6M	1SCA022812R3270	3.2
45/90	45/50		400	200	140	OTP90T6M	1SCA022812R3350	3.2
N-terminal included. Cable outlet type: Blank Auxiliary contacts included: 1NO • Auxiliary contacts max: 2NO+2NC								
37/80	37/40	Blank/Blank	400	200	140	OTP75T6U	1SCA022401R2030	3.2
45/90	45/50		400	200	140	OTP90T6U	1SCA022430R2460	3.2
Cable outlet type: knock-out. Auxiliary contacts included: 1NO • Auxiliary contacts max: 2NO+2NC								
30/63	30/35	I-flange / I-flange	400	200	140	OTP63T6B	1SCA022485R6440	2.5
37/80	37/40		400	200	140	OTP75T6B	1SCA022371R3040	3.2
45/90	45/50		400	200	140	OTP90T6B	1SCA022430R2380	3.2
Auxiliary contacts included: 2NO+4NC • Auxiliary contacts max: 2NO+2NC								
45/90	75/90	II-flange/II-flange	560	380	180	OT90GFCC6T	1SCA148666R1001	8
55/125	110/125		560	380	180	OT125GFCC6T	1SCA148668R1001	8

Compression glands or flanges to be ordered separately.

Ordering information

Plastic enclosed switch-disconnectors, 16...125 A



OTP16A6M



OTP25...36A6M



OTP75...90A6M



OTP75...90A6U



OT90...125GFCC6A

Enclosed switch-disconnectors with auxiliary contact and 'Safety switch' -sticker, 6-pole, IP65, red-yellow handle

The delivery includes a red-yellow handle (I-O/ON-OFF), PE-terminal, knock-out openings and auxiliary contacts according to the table below. Grey enclosure. Cover interlock and defeatable interlock included.

Cable entries from top and bottom

Max. motor output/ AC-23A			Enclosure dimensions					
415V	690V	Cable	Height	Width	Depth			Weight /unit
kW/A	kW/A	openings/side	mm	mm	mm	Type	Order number	kg
Selector handle								
N-terminal included. Threaded knock-out openings, also for control cables. Auxiliary contacts included: 1NO • Auxiliary contacts max: 2NO+1NC								
7,5/16	7,5/10	2xM25+M16/2xM25+M16	150	130	85	OTP16A6M	1SCA022401R2200	0.7
Pistol handle								
N-terminal included. Threaded knock-out openings, also for control cables. Auxiliary contacts included: 1NO • Auxiliary contacts max: 1NO+1NC								
15/30	15/20	2xM32+M16 /2xM32+M16	200	145	90	OTP25A6M	1SCA022401R2460	1.2
22/45	15/20		200	145	90	OTP36A6M	1SCA022401R2620	1.2
Auxiliary contacts included: 1NO • Auxiliary contacts max: 2NO+2NC								
37/80	37/40	2xM50+M16 /2xM50+M16	400	200	140	OTP75A6M	1SCA022812R3940	3.2
45/90	45/50		400	200	140	OTP90A6M	1SCA022812R4080	3.2
N-terminal included. Cable outlet type: blank Auxiliary contacts included: 1NO • Auxiliary contacts max: 2NO+2NC								
37/80	37/40	Blank/Blank	400	200	140	OTP75A6U	1SCA022401R2890	3.2
45/90	45/50		400	200	140	OTP90A6U	1SCA022430R2620	3.2
Cable outlet type: knock-out Auxiliary contacts included: 1NO • Auxiliary contacts max: 2NO+2NC								
30/63	30/35	I-flange / I-flange	400	200	140	OTP63A6B	1SCA022485R6280	2.5
37/80	37/40		400	200	140	OTP75A6B	1SCA022401R2710	3.2
45/90	45/50		400	200	140	OTP90A6B	1SCA022430R2540	3.2
Auxiliary contacts included: 2NO+2NC • Auxiliary contacts max: 2NO+2NC								
45/90	75/90	II-flange/II-flange	560	380	180	OT90GFCC6A	1SCA148665R1001	8
55/125	110/125		560	380	180	OT125GFCC6A	1SCA148667R1001	8

Compression glands or flanges to be ordered separately.

Ordering information

Plastic enclosed switch-disconnectors, 16...125 A



OTP16...32B6M



OTP45...63B6M



OTP125B6M



OTP125B6U

Enclosed switch-disconnectors, 6-pole, black handle, IP65

The delivery includes a handle (I-O/ON-OFF), N- and PE-terminals.
Includes black handle with cover interlock and defeatable interlock function

Cable entries from top and bottom

Max. motor output/ AC-23A			Dimensions					Weight
415V	690V	Cable	Height	Width	Depth			/unit
kW/A	kW/A	outlets/side	mm	mm	mm	Type	Order number	kg
Selector handle								
Auxiliary contacts included: none • Auxiliary contacts max: 2NO+1NC								
7.5 / 16	7.5 / 10	2xM25+M16 / 2xM25+M16	150	130	85	OTP16B6M*	1SCA022401R5560	0.7
9 / 20	9 / 11		150	130	85	OTP25B6M	1SCA022401R5720	0.7
11 / 23	11 / 12		150	130	85	OTP32B6M	1SCA022401R5990	0.7
Pistol handle. Threaded knock-outs, compression glands have to be ordered separately.								
Auxiliary contacts included: none • Auxiliary contacts max: 2NO+2NC								
22 / 45	15 / 20	2xM32+M16 / 2xM32+M16	200	145	90	OTP45B6M	1SCA022401R6110	1.6
37 / 75	18.5 / 20		200	145	90	OTP63B6M	1SCA022401R6370	1.6
45 / 90	45 / 50	2xM50+M16 / 2xM50+M16	400	200	140	OTP125B6M	1SCA022812R7340	3.2
45 / 90	45 / 50	Blank / Blank	400	200	140	OTP125B6U	1SCA022401R6700	3.2
Auxiliary contacts included: none • Auxiliary contacts max: 2NO+2NC								
45 / 90	45 / 50	I-flange / I-flange	400	200	140	OTP125B6B	1SCA022401R6610	3,2
45 / 90	45 / 50		400	200	140	OTP125BA6B	1SCA022401R7510	3,2

* Also available with lockable handle in On-position

Ordering information

Plastic enclosed switch-disconnectors, 16...125 A



OTP16...32BA6M



OTP45...63BA6M



OTP125BA6M



OTP125BA6U

Enclosed switch-disconnectors, 6-pole, red-yellow, IP65

The delivery includes a red-yellow handle (I-O/ON-OFF) with cover interlock and defeatable interlock function, N- and PE-terminals.

Cable entries from top and bottom

Max. motor output/ AC-23A			Dimensions					Weight
415V	690V	Cable	Height	Width	Depth			/unit
kW/A	kW/A	outlets/side	mm	mm	mm	Type	Order number	kg
Selector handle Auxiliary contacts included: none • Auxiliary contacts max: 2NO+1NC								
7.5 / 16	7.5 / 10	2xM25+M16 / 2xM25+M16	150	130	85	OTP16BA6M	1SCA022401R6880	0.7
9 / 20	9 / 11		150	130	85	OTP25BA6M	1SCA022401R6960	0.7
11 / 23	11 / 12		150	130	85	OTP32BA6M	1SCA022401R7000	0.7
Pistol handle Auxiliary contacts included: none • Auxiliary contacts max: 2NO+2NC								
22 / 45	15 / 20	2xM32+M16 / 2xM32+M16	200	145	90	OTP45BA6M	1SCA022401R7180	1.6
37 / 75	18.5 / 20		200	145	90	OTP63BA6M	1SCA022401R7260	1.6
45 / 90	45 / 50	2xM50+M16 / 2xM50+M16	400	200	140	OTP125BA6M	1SCA022812R7690	3.2
Selector handle Auxiliary contacts included: none • Auxiliary contacts max: 2NO+2NC								
45 / 90	45 / 50	Blank / Blank	400	200	140	OTP125BA6U	1SCA022401R7690	3.0

Threaded knock-outs, compression glands have to be ordered separately.
Knock-out flanges, flanges have to be ordered separately.

Ordering information

Plastic enclosed switch-disconnectors, 16...125 A



OTU100...125B3MS4
OTU100...125B4MS4

Enclosed switch disconnectors, 3-pole, IP65

The delivery includes a handle (I-O/ON-OFF), N- and PE-terminals. Knock out holes for cable entry. Padlockable handle for 3 padlocks. Cover is not interlocked.

Cable entries from top and bottom

Max. motor output/ AC-23A			Dimensions					Weight
415V	690V	Cable	Height	Width	Depth			/unit
kW/A	kW/A	outlets/side	mm	mm	mm	Type	Order number	kg
Black round handle Auxiliary contacts included: none • Auxiliary contacts max: 2NO+2NC								
37 / 80	37 / 40	2xø40.5+ø20.5 /	300	210	136	OTU100B3MS4	1SCA160360R1001	1.9
45 / 90	45 / 50	2xø40.5+ø20.5	300	210	136	OTU125B3MS4	1SCA160364R1001	1.9
Red-yellow round handle Auxiliary contacts included: none • Auxiliary contacts max: 2NO+2NC								
37 / 80	37 / 40	2xø40.5+ø20.5 /	300	210	136	OTU100BA3MS4	1SCA160362R1001	1.9
45 / 90	45 / 50	2xø40.5+ø20.5	300	210	136	OTU125BA3MS4	1SCA160366R1001	1.9



OTU100...125BA3MS4
OTU100...125BA4MS4

Enclosed switch disconnectors, 4-pole, IP65

The delivery includes a handle (I-O/ON-OFF), N- and PE-terminals. Knock out holes for cable entry. Padlockable handle for 3 padlocks. Cover is not interlocked.

Cable entries from top and bottom

Max. motor output/ AC-23A			Dimensions					Weight
415V	690V	Cable	Height	Width	Depth			/unit
kW/A	kW/A	outlets/side	mm	mm	mm	Type	Order number	kg
Black round handle Auxiliary contacts included: none • Auxiliary contacts max: 2NO+2NC								
37 / 80	37 / 40	2xø40.5+ø20.5 /	300	210	136	OTU100B4MS4	1SCA160361R1001	1.9
45 / 90	45 / 50	2xø40.5+ø20.5	300	210	136	OTU125B4MS4	1SCA160365R1001	1.9
Red-yellow round handle Auxiliary contacts included: none • Auxiliary contacts max: 2NO+2NC								
37 / 80	37 / 40	2xø40.5+ø20.5 /	300	210	136	OTU100BA4MS4	1SCA160363R1001	1.9
45 / 90	45 / 50	2xø40.5+ø20.5	300	210	136	OTU125BA4MS4	1SCA160367R1001	1.9

Ordering information

Plastic enclosed EMC switch-disconnectors, 16...90 A



OTE16T3M,
OTE16T4M



OTE25...63T3M
OTE25...36T4M



OTE75...90T3M,
OTE75...90T4M

EMC enclosed switch-disconnectors with auxiliary contact and 'Safety switch' -sticker, 3-pole, IP65, black handle

The delivery includes a black selector handle (I-O/ON-OFF), auxiliary contacts according to the table below, and PE-terminal. Grey enclosure. The handles are padlockable with three padlocks in O-position. The cables have to be shielded. Standard compression glands may be used (no EMC). Cover interlock and defeatable interlock included.

Cable entries from top and bottom

Max. motor output/ AC-23A			Enclosure dimensions					
415V	690V	Cable	Height	Width	Depth			Weight /unit
kW/A	kW/A	openings/side	mm	mm	mm	Type	Order number	kg
Auxiliary contacts included: 1NO • Auxiliary contacts max: 2NO+2NC								
37/80	37/40	I-flange / I-flange	400	200	140	OTE75T3B*	1SCA022438R3790	3,6
45/90	45/50		400	200	140	OTE90T3B	1SCA022438R3870	3,6
Auxiliary contacts included: 1NO • Auxiliary contacts max: 2NO+2NC								
7,5/16	7,5/10	2xM25+M16/2xM25+M16	150	130	85	OTE16T3M*	1SCA022613R2190	0.5
15/30	15/20	2xM32+M16/2xM32+M16	200	145	90	OTE25T3M*	1SCA022613R2270	0.9
22/45	15/20		200	145	90	OTE36T3M*	1SCA022613R2350	0.9
30/63	30/35		200	145	90	OTE63T3M	1SCA149375R1001	1
37/80	37/40	2xM50+M16/2xM50+M16	400	200	140	OTE75T3M*	1SCA022812R4160	3.6
45/90	45/50		400	200	140	OTE90T3M*	1SCA022812R4240	3.6

* Also available with lockable handle in On-position

EMC enclosed switch-disconnectors with auxiliary contact and 'Safety switch' -sticker, 4-pole, IP65, black handle

The delivery includes a black selector handle (I-O/ON-OFF), auxiliary contacts according to the table below, and PE-terminal. Grey enclosure. The handles are padlockable with three padlocks in O-position. The cables have to be shielded. Standard compression glands may be used (no EMC). Cover interlock and defeatable interlock included.

Cable entries from top and bottom

Max. motor output/ AC-23A			Enclosure dimensions					
415V	690V	Cable	Height	Width	Depth			Weight /unit
kW/A	kW/A	openings/side	mm	mm	mm	Type	Order number	kg
Auxiliary contacts included: 1NO • Auxiliary contacts max: 2NO+2NC								
37/80	37/40	I-flange / I-flange	400	200	140	OTE75T4B	1SCA022438R4250	3.7
45/90	45/50		400	200	140	OTE90T4B	1SCA022438R4330	3.7
Auxiliary contacts included: 1NO • Auxiliary contacts max: 2NO+2NC								
7,5/16	7,5/10	2xM25+M16/2xM25+M16	150	130	85	OTE16T4M	1SCA022613R2430	0.53
15/30	15/20	2xM32+M16/2xM32+M16	200	145	90	OTE25T4M	1SCA022613R2510	0.96
22/45	15/20		200	145	90	OTE36T4M	1SCA022613R2600	0.96
37/80	37/40	2xM50+M16/2xM50+M16	400	200	140	OTE75T4M	1SCA022812R4670	3.7
45/90	45/50		400	200	140	OTE90T4M	1SCA022812R5050	3.7

Threaded knock-out openings, compression glands have to be ordered separately.
The cables should be shielded to obtain proper EMC protection.

Ordering information

Plastic enclosed EMC switch-disconnectors, 16...90 A



OTE16A3M,
OTE16A4M



OTE25...63A3M
OTE25...36A4M



OTE75...90A3M
OTE75...90A4M

EMC enclosed switch-disconnectors with auxiliary contact and 'Safety switch' -sticker, 3-pole, IP65, red-yellow handle

The delivery includes a red-yellow selector handle (I-O/ON-OFF), auxiliary contacts according to the table below, and PE-terminal. Grey enclosure. The handles are padlockable with three padlocks in O-position. The cables have to be shielded. Standard compression glands may be used (no EMC). Cover interlock and defeatable interlock included.

Cable entries from top and bottom

Max. motor output/ AC-23A			Enclosure dimensions					Weight /unit
415V	690V	Cable	Height	Width	Depth			
kW/A	kW/A	openings/side	mm	mm	mm	Type	Order number	kg
Auxiliary contacts included: 1NO • Auxiliary contacts max: 2NO+2NC								
37/80	37/40	I-flange / I-flange	400	200	140	OTE75A3B	1SCA022438R4760	3,6
45/90	45/50		400	200	140	OTE90A3B	1SCA022438R4840	3,6
Auxiliary contacts included: 1NO • Auxiliary contacts max: 2NO+2NC								
7,5/16	7,5/10	2xM25+M16/2xM25+M16	150	130	85	OTE16A3M*	1SCA022613R8710	0.5
15/30	15/20	2xM32+M16/2xM32+M16	200	145	90	OTE25A3M	1SCA022613R9010	0.9
22/45	15/20		200	145	90	OTE36A3M	1SCA022613R9280	0.9
30/63	30/35		200	145	90	OTE63A3M	1SCA149374R1001	1
37/80	37/40	2xM50+M16/2xM50+M16	400	200	140	OTE75A3M	1SCA022812R5990	3.6
45/90	45/50		400	200	140	OTE90A3M*	1SCA022812R6020	3.6

* Also available with lockable handle in On-position

EMC enclosed switch-disconnectors with auxiliary contact and 'Safety switch' -sticker, 4-pole, IP65, red-yellow handle

The delivery includes a red-yellow selector handle (I-O/ON-OFF), auxiliary contacts according to the table below, and PE-terminal. Grey enclosure. The handles are padlockable with three padlocks in O-position. The cables have to be shielded. Standard compression glands may be used (no EMC). Cover interlock and defeatable interlock included.

Cable entries from top and bottom

Max. motor output/ AC-23A			Enclosure dimensions					Weight /unit
415V	690V	Cable	Height	Width	Depth			
kW/A	kW/A	openings/side	mm	mm	mm	Type	Order number	kg
Auxiliary contacts included: 1NO • Auxiliary contacts max: 2NO+2NC								
37/80	37/40	I-flange / I-flange	400	200	140	OTE75A4B	1SCA022438R5220	3,7
45/90	45/50		400	200	140	OTE90A4B	1SCA022438R5310	3,7
Auxiliary contacts included: 1NO • Auxiliary contacts max: 2NO+2NC								
7,5/16	7,5/10	2xM25+M16/2xM25+M16	150	130	85	OTE16A4M	1SCA022613R8800	0.53
15/30	15/20	2xM32+M16/2xM32+M16	200	145	90	OTE25A4M	1SCA022613R9100	0.96
22/45	15/20		200	145	90	OTE36A4M	1SCA022613R9360	0.96
37/80	37/40	2xM50+M16/2xM50+M16	400	200	140	OTE75A4M	1SCA022812R6370	3.7
45/90	45/50		400	200	140	OTE90A4M	1SCA022812R6450	3.7

Threaded knock-out openings, compression glands have to be ordered separately.
The cables should be shielded to obtain proper EMC protection.

Ordering information

Plastic enclosed EMC switch-disconnectors, 16...90 A



OTE16T6M



OTE25...90T6M

EMC enclosed switch-disconnectors with auxiliary contact and 'Safety switch' -sticker, 6-pole, IP65, black handle

The delivery includes a black handle (I-O/ON-OFF), auxiliary contacts according to the table below, and PE-terminal. Grey enclosure. The handles are padlockable with three padlocks in O-position. The cables have to be shielded. Standard compression glands may be used (no EMC). Cover interlock and defeatable interlock included.

Cable entries from top and bottom

Max. motor output/ AC-23A			Enclosure dimensions					
415V	690V	Cable	Height	Width	Depth			Weight /unit
kW/A	kW/A	openings/side	mm	mm	mm	Type	Order number	kg
Selector handle								
Auxiliary contacts included: 1NO • Auxiliary contacts max: 2NO+1NC								
7,5/16	7,5/10	2xM25+M16/2xM25+M16	150	130	85	OTE16T6M	1SCA022613R8980	1
Pistol handle								
Auxiliary contacts included: 1NO • Auxiliary contacts max: 2NO+2NC								
15/30	15/20	I-flange / I-flange	400	200	140	OTE25T6B	1SCA022506R4120	4,1
22/45	15/20		400	200	140	OTE36T6B	1SCA022506R4210	4,1
37/80	37/40		400	200	140	OTE75T6B	1SCA022536R1680	4,2
45/90	45/50		400	200	140	OTE90T6B	1SCA022536R1760	4,2
Auxiliary contacts included: 1NO • Auxiliary contacts max: 2NO+2NC								
15/30	15/20	2xM40+M16/2xM40+M16	400	200	140	OTE25T6M	1SCA150552R1001	4.1
22/45	15/20		400	200	140	OTE36T6M	1SCA150554R1001	4.1
30/63	30/35		400	200	140	OTE63T6M	1SCA150556R1001	4.3
37/80	37/40	2xM50+M16/2xM50+M16	400	200	140	OTE75T6M	1SCA022812R5720	4.2
45/90	45/50		400	200	140	OTE90T6M	1SCA022812R5810	4.2

Threaded knock-out openings, compression glands have to be ordered separately.
The cables should be shielded to obtain proper EMC protection.

Ordering information

Plastic enclosed EMC switch-disconnectors, 16...90 A



OTE16A6M



OTE25...63A6M



OTE75...90A6M

EMC enclosed switch-disconnectors with auxiliary contact and 'Safety switch' -sticker, 6-pole, IP65, red-yellow handle

The delivery includes a red-yellow handle (I-O/ON-OFF), auxiliary contacts according to the table below, and PE-terminal. Grey enclosure. The handles are padlockable with three padlocks in O-position. The cables have to be shielded. Standard compression glands may be used (no EMC needed). Cover interlock and defeatable interlock included.

Cable entries from top and bottom

Max. motor output/ AC-23A			Enclosure dimensions					
415V	690V	Cable	Height	Width	Depth			Weight /unit
kW/A	kW/A	openings/side	mm	mm	mm	Type	Order number	kg
Selector handle								
Auxiliary contacts included: 1NO • Auxiliary contacts max: 2NO+1NC								
7,5/16	7,5/10	2xM25+M16/2xM25+M16	150	130	85	OTE16A6M	1SCA022681R1250	1
Auxiliary contacts included: 1NO • Auxiliary contacts max: 2NO+2NC								
15/30	15/20	2xM40+M16/2xM40+M16	400	200	140	OTE25A6M	1SCA150551R1001	4.1
22/45	15/20		400	200	140	OTE36A6M	1SCA150553R1001	4.1
30/63	30/35		400	200	140	OTE63A6M	1SCA150555R1001	4.3
Pistol handle								
Auxiliary contacts included: 1NO • Auxiliary contacts max: 2NO+2NC								
15/30	15/20	I-flange / I-flange	400	200	140	OTE25A6B	1SCA022615R0500	4.1
22/45	15/20		400	200	140	OTE36A6B	1SCA022652R3890	4.1
37/80	37/40		400	200	140	OTE75A6B	1SCA022652R3970	4.2
45/90	45/50		400	200	140	OTE90A6B	1SCA022652R4010	4.2
Auxiliary contacts included: 1NO • Auxiliary contacts max: 2NO+2NC								
37/80	37/40	2xM50+M16/2xM50+M16	400	200	140	OTE75A6M	1SCA022812R6700	4.2
45/90	45/50		400	200	140	OTE90A6M	1SCA022812R6880	4.2

Threaded knock-out openings, compression glands have to be ordered separately.
The cables should be shielded to obtain proper EMC protection.

Ordering Information

Steel sheet enclosed switch-disconnectors, 16...125 A

Type keys

Steel sheet enclosed switch-disconnectors, type OTL_

Main type	
Steel sheet enclosed switch-disconnector	**OTL**

Switch size

Number of poles

OTL 16 B 3 M

Construction	
Enclosed switch-disconnector with auxiliary contact and 'Safety switch' sticker, red/yellow handle	**A**
Enclosed switch-disconnector with auxiliary contact and 'Safety switch' sticker, black handle	**T**
Enclosed switch-disconnector (without auxiliary contacts), black handle	**B**
Enclosed switch-disconnector (without auxiliary contacts), red yellow handle	**BA**

Cable outlets	
Metric cable outlets	**M**
Without cable openings	**U**
B-flange	**B**

Steel sheet enclosed switch-disconnectors, type OT_

Type of enclosure and cable entry	
Steel sheet enclosure. Cable entry Top/Bottom	**L**
Steel sheet enclosure. Cable entry Bottom/Bottom	**A**
Steel sheet enclosure. Cable entry Top/Top	**D**
Steel sheet enclosure. EMC. Cable entry Top/Bottom	**T**
Steel sheet enclosure. EMC. Cable entry Bottom/Bottom	**U**

Main type

Switch size

Number of poles

OT 90G L C C 3 T Z

Enclosed switch-disconnector	
Enclosed switch-disconnector with auxiliary contact and 'Safety switch' sticker, black handle	**T**
Enclosed switch-disconnector with auxiliary contact and 'Safety switch' sticker, red/yellow handle	**A**
Enclosed switch-disconnector without auxiliary contact, black handle	**B**
Enclosed switch-disconnector without auxiliary contact, red/yellow handle	**BA**

Construction, IP Class	
IP65	**Z**
EMC Switch (sizes 16...63 A) IP65	**E**

Upper end configuration for the enclosure	
Space for B-flange	**B**
Space for C-flange	**C**
Space for ring flange	**R**
Space for M glands	**M**
Closed ends	**U**

Lower end configuration for the enclosure	
Space for B-flange	**B**
Space for C-flange	**C**
Space for ring flange	**R**
Space for M glands	**M**
Closed ends	**U**

Ordering information

Steel sheet enclosed switch-disconnectors, 16...125 A



OTL16...36T3M



OTL16T3M32,
OTL25...36T3M25



OTL63T3M



OTL75...90T3B



OTL75...90T3U



OT90...125GLUU3TZ



OTL16...63T3B

Enclosed switch-disconnectors with auxiliary contact and 'Safety switch' -sticker, 3-pole, IP65, black handle

The delivery includes a black handle (I-O/ON-OFF), PE-terminal and auxiliary contact. Knock-out type cable outlets included, cable outlets also for control cable. Hinged cover, grey enclosure, equipped with hinges and lock. Cover interlock and defeatable interlock included.

Cable entries from top and bottom

Max. motor output/ AC-23A			Enclosure dimensions					
415V	690V	Cable outlets	Height	Width	Depth			Weight /unit
kW/A	kW/A	/side	mm	mm	mm	Type	Order number	kg
Selector handle								
Auxiliary contacts included: 1NO • Auxiliary contacts max: 2NO+2NC								
7,5/16	7,5/10	2xø25.5/2xø25.5	200	150	100	OTL16T3M	1SCA022612R9810	1.7
7,5/16	7,5/10	2xø32.5+ø16.5/2xø32.5+ø16.5	200	150	100	OTL16T3M32	1SCA130523R1001	1.7
Auxiliary contacts included: 1NO • Auxiliary contacts max: 2NO+1NC								
15/30	15/20	2xø32.5+ø16.5/2xø32.5+ø16.5	200	150	100	OTL25T3M	1SCA022612R9990	1.9
15/30	15/20	2xø25.5+ø16.5/2xø25.5+ø16.5	200	150	100	OTL25T3M25	1SCA122326R1001	1.9
22/45	15/20	2xø32.5+ø16.5/2xø32.5+ø16.5	200	150	100	OTL36T3M	1SCA022613R0060	1.9
22/45	15/20	2xø25.5+ø16.5/2xø25.5+ø16.5	200	150	100	OTL36T3M25	1SCA100645R1001	1.9
Pistol handle								
Auxiliary contacts included: 1NO • Auxiliary contacts max: 2NO+2NC								
30/63	30/35	2xø32.5+ø16.5/ 2xø32.5+ø16.5	250	165	110	OTL63T3M	1SCA022609R7180	2.4
37/80	37/40	B-flange/B-flange	300	200	135	OTL75T3B	1SCA022546R0820	3.3
37/80	37/40	Blank/Blank	300	200	135	OTL75T3U	1SCA022718R4520	3.3
45/90	45/50	B-flange/B-flange	300	200	135	OTL90T3B	1SCA022546R1120	3.3
45/90	45/50	Blank/Blank	300	200	135	OTL90T3U	1SCA022718R4610	3.1
Pistol handle, entry plate fixing profile is used also for mounting the enclosed switch-disconnector								
Auxiliary contacts included: 1NO+1NC • Auxiliary contacts max: 2NO+2NC								
45/90	75/90	Blank / Blank	400	250	180	OT90GLUU3TZ[1)]	1SCA148207R1001	9.4

Cable entries from bottom

Max. motor output/ AC-23A			Enclosure dimensions					
415V	690V	Cable outlets	Height	Width	Depth			Weight /unit
kW/A	kW/A	/side	mm	mm	mm	Type	Order number	kg
Selector handle								
Auxiliary contacts included: 1NO • Auxiliary contacts max: 2NO+2NC								
7,5/16	7,5/10	Blank/B-flange	200	150	100	OTL16T3B	1SCA022571R9150	1.7
Auxiliary contacts included: 1NO • Auxiliary contacts max: 2NO+1NC								
15/30	15/20	Blank/B-flange	200	150	100	OTL25T3B	1SCA022571R9230	1.9
22/45	15/20		200	150	100	OTL36T3B	1SCA022571R9310	1.9
30/63	30/35		200	150	100	OTL63T3B	1SCA022571R9400	2.0

Compression glands or flanges to be ordered separately.
[1)] Knock-outs 10, 12.5, 20.5, 25.5, 32.5, 40.5 mm

Ordering information

Steel sheet enclosed switch-disconnectors, 16...125 A



OTL16...36A3M



OTL63A3M



OTL75...90A3B



OTL75...90A3U



OTL16...36A3B

Enclosed switch-disconnectors with auxiliary contact and 'Safety switch' -sticker, 3-pole, IP65, red-yellow handle

The delivery includes a red-yellow handle (I-O/ON-OFF), auxiliary contact 1NO and PE-terminal. Knock-out type Cable outlets included, cable outlets also for control cable. Grey enclosure, equipped with hinges and lock. Cover interlock and defeatable interlock included.

Cable entries from top and bottom

Max. motor output/ AC-23A			Enclosure dimensions					Weight
415V	690V	Cable	Height	Width	Depth			/unit
kW/A	kW/A	openings/side	mm	mm	mm	Type	Order number	kg
Selector handle								
Auxiliary contacts included: 1NO • Auxiliary contacts max: 2NO+2NC								
7,5/16	7,5/10	2xø25.5/2xø25.5	200	150	100	OTL16A3M	1SCA022612R8750	1.7
Auxiliary contacts included: 1NO • Auxiliary contacts max: 2NO+1NC								
15/30	15/20	2xø32.5+ø16.5/ 2xø32.5+ø16.5	200	150	100	OTL25A3M	1SCA022612R8830	1.9
22/45	15/20		200	150	100	OTL36A3M	1SCA022612R8910	1.9
Pistol handle								
Auxiliary contacts included: 1NO • Auxiliary contacts max: 2NO+2NC								
30/63	30/35	2xø32.5+ø16.5/ 2xø32.5+ø16.5	250	165	110	OTL63A3M	1SCA022612R9050	2.4
37/80	37/40	B-flange/B-flange	300	200	135	OTL75A3B	1SCA022555R7580	3.3
37/80	37/40	Blank/Blank	300	200	135	OTL75A3U	1SCA022707R7610	3.3
45/90	45/50	B-flange/B-flange	300	200	135	OTL90A3B	1SCA022555R7820	3.3
45/90	45/50	Blank/Blank	300	200	135	OTL90A3U	1SCA022707R7790	3.3

Cable entries from bottom

Max. motor output/ AC-23A			Enclosure dimensions					Weight
415V	690V	Cable	Height	Width	Depth			/unit
kW/A	kW/A	openings/side	mm	mm	mm	Type	Order number	kg
Selector handle								
Auxiliary contacts included: 1NO • Auxiliary contacts max: 2NO+2NC								
7,5/16	7,5/10	Blank/B-flange	200	150	100	OTL16A3B	1SCA022575R1630	1.7
Auxiliary contacts included: 1NO • Auxiliary contacts max: 2NO+1NC								
15/30	15/20	Blank/B-flange	200	150	100	OTL25A3B	1SCA022575R1710	1.9
22/45	15/20		200	150	100	OTL36A3B	1SCA022575R1800	1.9
Pistol handle								
Auxiliary contacts included: 1NO • Auxiliary contacts max: 2NO+1NC								
30/63	30/35	Blank/B-flange	200	150	100	OTL63A3B	1SCA022575R1980	2.0

Compression glands or flanges to be ordered separately.

Ordering information

Steel sheet enclosed switch-disconnectors, 16...125 A



OTL16...63B3M



OTL100...125B3B



OTL32...125B3U

Enclosed switch-disconnectors, 3-pole, black handle, IP65

The delivery includes a black handle (I-O/ON-OFF), N- and PE-terminals with cover interlock and defeatable interlock function.

Cable entries from top and bottom

Max. motor output/ AC-23A			Dimensions					Weight /unit
415V	690V	Cable	Height	Width	Depth			
kW/A	kW/A	outlets/side	mm	mm	mm	Type	Order number	kg
Selector handle Auxiliary contacts included: none • Auxiliary contacts max: 2NC								
7.5 / 16	7.5 / 10	2xø25.5+ø16.5 / 2xø25.5+ø16.5	200	150	100	OTL16B3M*	1SCA022562R1260	1.7
9 / 20	9 / 11		200	150	100	OTL25B3M*	1SCA022562R2400	1.7
11 / 23	11 / 12		200	150	100	OTL32B3M*	1SCA022562R3630	1.7
Selector handle Auxiliary contacts included: none • Auxiliary contacts max: 1NO+2NC								
22 / 45	15 / 20	2xø32.5+ø16.5 / 2xø32.5+ø16.5	200	150	100	OTL45B3M*	1SCA022562R4790	1.9
37 / 75	18.5 / 20		200	150	100	OTL63B3M*	1SCA022562R5920	1.9
Pistol handle Auxiliary contacts included: none • Auxiliary contacts max: 1NO+2NC								
37 / 80	37 / 40	B-flange / B-flange	300	200	135	OTL100B3B	1SCA022562R8350	3.4
45 / 90	45 / 50		300	200	135	OTL125B3B	1SCA022562R9590	3.4
Pistol handle. Blank cable entry. Auxiliary contacts included: none • Auxiliary contacts max: 2NC								
11 / 23	11 / 12	Blank / Blank	300	200	135	OTL32B3U	1SCA127689R1001	1.7
Auxiliary contacts included: none • Auxiliary contacts max: 1NO+2NC								
37 / 75	18.5 / 20	Blank / Blank	300	200	135	OTL63B3U	1SCA127686R1001	1.9
37 / 80	37 / 40		300	200	135	OTL100B3U	1SCA022562R8430	3.4
45 / 90	45 / 50		300	200	135	OTL125B3U	1SCA022562R9670	3.4

* Also available with lockable handle in On-position

Cable knock-outs as standard, compression glands and flanges have to be ordered separately.

Ordering information

Steel sheet enclosed switch-disconnectors, 16...125 A



OTL16...63BA3M



OTL100...125BA3B



OTL100...125BA3U

Enclosed switch-disconnectors, 3-pole, red-yellow handle, IP65

The delivery includes a red-yellow handle (I-O/ON-OFF), N- and PE-terminals. The handle has cover interlock and defeatable interlock function.

Cable entries from top and bottom

Max. motor output/ AC-23A			Dimensions					
415V	690V	Cable	Height	Width	Depth			Weight /unit
kW/A	kW/A	outlets/side	mm	mm	mm	Type	Order number	kg
Selector handle Auxiliary contacts included: none • Auxiliary contacts max: 2NC								
7.5 / 16	7.5 / 10	2xø25.5+ø16.5 / 2xø25.5+ø16.5	200	150	100	OTL16BA3M	1SCA022562R1850	1.7
9 / 20	9 / 11		200	150	100	OTL25BA3M	1SCA022562R3040	1.7
11 / 23	11 / 12		200	150	100	OTL32BA3M	1SCA022562R4100	1.7
Selector handle Auxiliary contacts included: none • Auxiliary contacts max: 1NO+2NC								
22 / 45	15 / 20	2xø32.5+ø16.5 / 2xø32.5+ø16.5	200	150	100	OTL45BA3M	1SCA022562R5330	1.9
37 / 75	18.5 / 20		200	150	100	OTL63BA3M	1SCA022562R6570	1.9
Pistol handle Auxiliary contacts included: none • Auxiliary contacts max: 1NO+2NC								
37 / 80	37 / 40	B-flange / B-flange	300	200	135	OTL100BA3B	1SCA022562R8940	3.4
37 / 80	37 / 40	Blank / Blank	300	200	135	OTL100BA3U	1SCA022562R9080	3.4
45 / 90	45 / 50	B-flange / B-flange	300	200	135	OTL125BA3B	1SCA022563R0250	3.4
45 / 90	45 / 50	Blank / Blank	300	200	135	OTL125BA3U	1SCA022563R0330	3.4

Cable knock-outs as standard, compression glands have to be ordered separately.

Ordering information

Steel sheet enclosed switch-disconnectors, 16...125 A



OT90...125GAUR3TZ

Enclosed switch-disconnectors with auxiliary contact and 'Safety switch' -sticker, with ring-flange cable entries, 3-pole, IP65, black handle

The delivery includes a black pistol type handle (I-O/ON-OFF), PE-terminal and grey enclosure. Fixed cable entry with ring-flange entries. Entry plate fixing profiles are used also for mounting the enclosed switch-disconnector. Cover interlock and defeatable interlock included.

Cable entries from bottom

Max. motor output/ AC-23A			Enclosure dimensions			Cover flanges included			Weight /unit
415V	690V	Cable outlets	Height	Width	Depth				
kW/A	kW/A	/side	mm	mm	mm	[pcs]	Type	Order number	kg
Knock-outs: 3x10mm, 12.5mm, 20.5mm, 25.5mm, 32.5mm Auxiliary contacts included: 1NO+1NC • Auxiliary contacts max: 2NO+2NC									
45/90	75 / 90	Blank/ 4xring-flange	400	400	230	4	OT90GAUR3TZ	1SCA148436R1001	14.8
55/125	110 / 125		400	400	230	4	OT125GAUR3TZ	1SCA148442R1001	14.8

Compression glands or flanges to be ordered separately.



OT90...125GAUR3AZ

Enclosed switch-disconnectors with auxiliary contact and 'Safety switch' -sticker with ring-flange cable entries, 3-pole, IP65, red-yellow handle

The delivery includes a red-yellow pistol handle (I-O/ON-OFF), PE-terminal and grey enclosure. Fixed cable entry with ring-flange entries. Entry plate fixing profiles are used also for mounting the enclosed switch-disconnector. Auxiliary contacts are wired to the terminal blocks in sizes 200A...800A. Cover interlock and defeatable interlock included.

Cable entries from bottom

Max. motor output/ AC-23A			Enclosure dimensions			Cover flanges included			Weight /unit
415V	690V	Cable	Height	Width	Depth				
kW/A	kW/A	openings/side	mm	mm	mm	[pcs]	Type	Order number	kg
Knock-outs: 3x10mm, 12.5mm, 20.5mm, 25.5mm, 32.5mm Auxiliary contacts included: 1NO+1NC • Auxiliary contacts max: 2NO+2NC									
45/90	75/90	Blank/4xring-flange	400	400	230	4	OT90GAUR3AZ	1SCA148435R1001	14.8
55/125	110/125		400	400	230	4	OT125GAUR3AZ	1SCA148441R1001	14.8

Compression glands or flanges to be ordered separately.

Ordering information

Steel sheet enclosed switch-disconnectors, 16...125 A

Enclosed switch-disconnectors with auxiliary contact and 'Safety switch' -sticker, with C-flange cable entries, 3-pole, IP65, black handle



OT90...125GLCC3TZ



OT90...125GAUC3TZ

The delivery includes a black pistol type handle (I-O/ON - OFF indication), PE-terminal, grey enclosure. Fixed cable entries with C-flange entries. Entry plate fixing profiles are used also for mounting the enclosed switch-disconnector. Cover interlock and defeatable interlock included.

Cable entries from top and bottom

Max. motor output/ AC-23A		Cable outlets /side	Enclosure dimensions			Cover flanges included [pcs]	Type	Order number	Weight /unit
415V	690V		Height	Width	Depth				
kW/A	kW/A		mm	mm	mm				kg
Knock-outs: 3x10mm, 12.5mm, 20.5mm, 25.5mm, 32.5mm Auxiliary contacts included: 1NO • Auxiliary contacts max: 2NO+2NC									
45 / 90	75 / 90	C-flange / C-flange	400	250	180	0	OT90GLCC3TZ	1SCA148204R1001	9,4
55 / 125	110 / 125		400	250	180	0	OT125GLCC3TZ	1SCA148212R1001	9,4

Cable entries from bottom

Knock-outs: 10mm, 12.5mm, 20.5mm, 25.5mm, 32.5mm Auxiliary contacts included: 1NO+1NC • Auxiliary contacts max: 2NO+2NC									
45/90	75/90	Blank/2xC-flange	400	400	230	1	OT90GAUC3TZ	1SCA148434R1001	14.5
55/125	110/125		400	400	230	1	OT125GAUC3TZ	1SCA148440R1001	14.5

Compression glands or flanges to be ordered separately.

Enclosed switch-disconnectors with auxiliary contact and 'Safety switch' -sticker, with C-flange cable entries, 3-pole, IP65, red-yellow handle



OT90...125GLCC3AZ



OT90...125GAUC3AZ

The delivery includes a red-yellow pistol handle (I-O/ON-OFF), PE-terminal and grey enclosure. Fixed cable entries with C-flange entries. Entry plate fixing profiles are used also for mounting the enclosed switch-disconnector. Auxiliary contacts are wired to the terminal blocks in sizes 200A...800A. Cover interlock and defeatable interlock included.

Cable entries from top and bottom

Max. motor output/ AC-23A		Cable openings/side	Enclosure dimensions			Cover flanges included [pcs]	Type	Order number	Weight /unit
415V	690V		Height	Width	Depth				
kW/A	kW/A		mm	mm	mm				kg
Knock-outs: 9.5mm, 10mm, 12.5mm, 20.5mm, 25.5mm Auxiliary contacts included: 1NO+1NC • Auxiliary contacts max: 2NO+2NC									
45/90	75/90	C-flange/C-flange	400	250	180	0	OT90GLCC3AZ	1SCA148203R1001	9.4
55/125	110/125		400	250	180	0	OT125GLCC3AZ	1SCA148211R1001	9.4

Cable entries from bottom

Knock-outs: 9.5mm, 10mm, 12.5mm, 20.5mm, 25.5mm Auxiliary contacts included: 1NO+1NC • Auxiliary contacts max: 2NO+2NC									
45/90	75/90	Blank/2xC-flange	400	400	230	1	OT90GAUC3AZ	1SCA148433R1001	14.5
55/125	110/125		400	400	230	1	OT125GAUC3AZ	1SCA148439R1001	14.5

Compression glands or flanges to be ordered separately.

Ordering information

Steel sheet enclosed switch-disconnectors, 16...125 A



OT90...125GAUM3TZ

Enclosed switch-disconnectors with auxiliary contact and 'Safety switch' -sticker for compression type cable glands, 3-pole, IP65, black handle

The delivery includes a black pistol type handle (I-0/ON-OF), PE-terminals and grey enclosure. Fixed cable entries with knock outs for compression type glands. Entry plate fixing profiles are used also for mounting the enclosed switch-disconnector. Cover interlock and defeatable interlock included.

Cable entries from bottom

Max. motor output/ AC-23A			Enclosure dimensions					
415V	690V	Cable outlets	Height	Width	Depth			Weight /unit
kW/A	kW/A	/side	mm	mm	mm	Type	Order number	kg
Auxiliary contacts included: 1NO+1NC. • Auxiliary contacts max: 2NO+2NC								
45 / 90	75 / 90	Blank / Knock-outs: 2x63.5mm, 2x50.5mm, 2x40.5mm, 25.5mm, 20.5mm	400	400	230	OT90GAUM3TZ	1SCA161656R1001	14,5
55 / 125	110 / 125	Blank / Knock-outs: 2x63.5mm, 2x50.5mm, 2x40.5mm, 25.5mm, 20.5mm	400	400	230	OT125GAUM3TZ	1SCA161650R1001	14,5

Compression glands or flanges to be ordered separately.



OT90GLUU3AZ

Enclosed switch-disconnectors with auxiliary contact and 'Safety switch' -sticker with blank cable entries, 3-pole, IP65, red-yellow handle

The delivery includes a red-yellow pistol handle (I-O/ON-OFF), PE-terminal and grey enclosure. Blank cable entries. Auxiliary contacts are wired to the terminal blocks in sizes 200A...800A. Cover interlock and defeatable interlock included.

Cable entries from top and bottom

Max. motor output/ AC-23A			Enclosure dimensions					
415V	690V	Cable	Height	Width	Depth			Weight /unit
kW/A	kW/A	openings/side	mm	mm	mm	Type	Order number	kg
Auxiliary contacts included: 1NO+1NC • Auxiliary contacts max: 2NO+2NC								
45/90	75/90	Blank/Blank	400	250	180	OT90GLUU3AZ[1)]	1SCA148206R1001	9.4

Compression glands or flanges to be ordered separately.
[1)] Knock-outs 10, 12.5, 20.5, 25.5, 32.5, 40.5 mm

Ordering information

Steel sheet enclosed switch-disconnectors, 16...125 A



OT125GLUU3BZ

Enclosed switch-disconnectors with blank cable entries, 3-pole, black handle, IP65

The delivery includes a black pistol handle (I-O/ON-OFF), N- and PE-terminals. The handle includes cover interlock and defeatable interlock function. Delivery with blank cable entries, which are also used for fixing the enclosed switch.

Cable entries from top and bottom

Max. motor output/ AC-23A			Dimensions					Weight /unit
415V	690V	Cable	Height	Width	Depth			
kW/A	kW/A	outlets/side	mm	mm	mm	Type	Order number	kg
Auxiliary contacts included: none • Auxiliary contacts max: 2NO+1NC								
55 / 125	110 / 125	Blank / Blank	400	250	180	OT125GLUU3BZ[1)]	1SCA148274R1001	9.5

[1)] OT125GLUU3BZ includes knock out holes: 10mm, 12.5mm, 20.5mm, 25.5mm, 32.5mm, 40.5mm

Compression glands or flanges to be ordered separately.



OT125GLCC3BZ

Enclosed switch-disconnectors with C-flange cable entries, 3-pole, black handle, IP65

The delivery includes a black pistol handle (I-O/ON-OFF), N- and PE-terminals. The handle includes cover interlock and defeatable interlock function. The delivery includes C-flange cable plates, which are used also for fixing the enclosed switch-disconnectors. One incoming and one outgoing cables are considered. When more than one cable entry is available, the delivery includes C-flange cover plates.

Cable entries from top and bottom

Max. motor output/ AC-23A			Dimensions			Cover flanges included [pcs]			Weight /unit
415V	690V	Cable	Height	Width	Depth				
kW/A	kW/A	outlets/side	mm	mm	mm		Type	Order number	kg
The cable entry plates contains knock-outs: 10mm, 12.5mm, 20.5mm, 25.5mm, 32.5mm Auxiliary contacts included: none • Auxiliary contacts max: 2NO+1NC									
55 / 125	110 / 125	C-flange / C-flange	400	250	180	0	OT125GLCC3BZ	1SCA148273R1001	9.5

Compression glands or flanges to be ordered separately.

Ordering information

Steel sheet enclosed switch-disconnectors, 16...125 A


OTL16T4M


OTL25...36T4M


OTL63T4M


OTL75...90T4B


OTL16...36T4B

Enclosed switch-disconnectors with auxiliary contact and 'Safety switch' -sticker, 4-pole, IP65, black handle

The delivery includes a black handle (I-O/ON-OFF), auxiliary contact 1NO and PE-terminal. Knock-out type Cable outlets included, cable outlets also for control cable. Compression glands and flanges have to be ordered separately, see Accessories. Grey enclosure, equipped with hinges and lock. Auxiliary contacts are wired to the terminal blocks in sizes 200A...800A. Cover interlock and defeatable interlock included.

Cable entries from top and bottom

Max. motor output/ AC-23A			Enclosure dimensions					
415V	690V	Cable outlets	Height	Width	Depth			Weight /unit
kW/A	kW/A	/side	mm	mm	mm	Type	Order number	kg
Selector handle								
Auxiliary contacts included: 1NO • Auxiliary contacts max: 2NO+2NC								
7,5/16	7,5/10	2xø25.5/2xø25.5	200	150	100	OTL16T4M	1SCA022613R0140	1.8
Auxiliary contacts included: 1NO • Auxiliary contacts max: 2NO+1NC								
15/30	15/20	2xø32.5+ø16.5/ 2xø32.5+ø16.5	200	150	100	OTL25T4M	1SCA022613R0220	2
22/45	15/20		200	150	100	OTL36T4M	1SCA022613R0310	2
Pistol handle								
Auxiliary contacts included: 1NO • Auxiliary contacts max: 2NO+2NC								
30/63	30/35	2xø32.5+ø16.5/ 2xø32.5+ø16.5	250	165	110	OTL63T4M	1SCA022613R0490	2.5
37/80	37/40	B-flange/B-flange	300	200	135	OTL75T4B	1SCA022546R0910	3.4
45/90	45/50		300	200	135	OTL90T4B	1SCA022546R1210	3.4

Cable entries from bottom

Max. motor output/ AC-23A			Enclosure dimensions					
415V	690V	Cable outlets	Height	Width	Depth			Weight /unit
kW/A	kW/A	/side	mm	mm	mm	Type	Order number	kg
Selector handle								
Auxiliary contact included s: 1NO • Auxiliary contacts max: 2NO+2NC								
7,5/16	7,5/10	Blank/B-flange	200	150	100	OTL16T4B	1SCA022580R5150	1.8
Auxiliary contact included s: 1NO • Auxiliary contacts max: 2NO+1NC								
15/30	15/20	Blank/B-flange	200	150	100	OTL25T4B	1SCA022580R5310	2
22/45	15/20		200	150	100	OTL36T4B	1SCA022580R5400	2
Pistol handle								
Auxiliary contacts included: 1NO • Auxiliary contacts max: 1NO+1NC								
30/63	30/35	Blank/B-flange	200	150	100	OTL63T4B	1SCA022580R5580	2.1

Compression glands or flanges to be ordered separately.

Ordering information

Steel sheet enclosed switch-disconnectors, 16...125 A



OTL16A4M



OTL25...36A4M



OTL75...90A4B



OTL16...36A4B



OTL63A4B

Enclosed switch-disconnectors with auxiliary contact and 'Safety switch' -sticker, 4-pole, IP65, red-yellow handle

The delivery includes a red-yellow handle (I-O/ON-OFF), auxiliary contact 1NO and PE-terminal. Knock-out type Cable outlets included, cable outlets also for control cable. Grey enclosure, equipped with hinges and lock. Cover interlock and defeatable interlock included.

Cable entries from top and bottom

Max. motor output/ AC-23A			Enclosure dimensions					Weight
415V	690V	Cable	Height	Width	Depth			/unit
kW/A	kW/A	openings/side	mm	mm	mm	Type	Order number	kg
Selector handle								
Auxiliary contacts included: 1NO • Auxiliary contacts max: 2NO+2NC								
7,5/16	7,5/10	2xø25.5/2xø25.5	200	150	100	OTL16A4M	1SCA022612R9130	1.8
Auxiliary contacts included: 1NO • Auxiliary contacts max: 2NO+1NC								
15/30	15/20	2xø32.5+ø16.5/ 2xø32.5+ø16.5	200	150	100	OTL25A4M	1SCA022612R9210	2
22/45	15/20		200	150	100	OTL36A4M	1SCA022612R9300	2
Pistol handle								
Auxiliary contacts included: 1NO • Auxiliary contacts max: 2NO+2NC								
30/63	30/35	2xø32.5+ø16.5/ 2xø32.5+ø16.5	250	165	110	OTL63A4M	1SCA022612R9480	2.5
37/80	37/40	B-flange/B-flange	300	200	135	OTL75A4B	1SCA022555R7660	3.4
45/90	45/50		300	200	135	OTL90A4B	1SCA022555R7910	3.4

Cable entries from bottom

Max. motor output/ AC-23A			Enclosure dimensions					Weight
415V	690V	Cable	Height	Width	Depth			/unit
kW/A	kW/A	openings/side	mm	mm	mm	Type	Order number	kg
Selector handle								
Auxiliary contacts included: 1NO • Auxiliary contacts max: 2NO+2NC								
7,5/16	7,5/10	Blank/B-flange	200	150	100	OTL16A4B	1SCA022745R7010	1.7
Auxiliary contacts included: 1NO • Auxiliary contacts max: 2NO+1NC								
15/30	15/20	Blank/B-flange	200	150	100	OTL25A4B	1SCA022745R7190	2
22/45	15/20		200	150	100	OTL36A4B	1SCA022745R7270	2
Auxiliary contacts included: 1NO • Auxiliary contacts max: 1NO+1NC								
30/63	30/35	Blank/B-flange	200	150	100	OTL63A4B	1SCA022745R7350	2.1

Compression glands or flanges to be ordered separately.

Ordering information

Steel sheet enclosed switch-disconnectors, 16...125 A



OTL16...63B4M



OTL100...125B4B



OTL100...125B4U

Enclosed switch-disconnectors, 4-pole, black handle, IP65

The delivery includes a black handle ((I-O/ON-OFF), N- and PE-terminals) with cover interlock and defeatable interlock function

Cable entries from top and bottom

Max. motor output/ AC-23A			Dimensions					
415V	690V	Cable	Height	Width	Depth			Weight /unit
kW/A	kW/A	outlets/side	mm	mm	mm	Type	Order number	kg
Selector handle								
Auxiliary contacts included: none • Auxiliary contacts max: 2NO+2NC								
7.5 / 16	7.5 / 10	2xø25.5+ø16.5 / 2xø25.5+ø16.5	200	150	100	OTL16B4M	1SCA022562R4120	1.6
9 / 20	9 / 11		200	150	100	OTL25B4M*	1SCA022562R2660	1.7
11 / 23	11 / 12		200	150	100	OTL32B4M	1SCA022562R3800	1.7
Auxiliary contacts included: none • Auxiliary contacts max: 2NO+1NC								
22 / 45	15 / 20	2xø32.5+ø16.5 / 2xø32.5+ø16.5	200	150	100	OTL45B4M*	1SCA022562R4950	1.9
37 / 75	18.5 / 20		200	150	100	OTL63B4M*	1SCA022562R6140	1.9
Pistol handle								
Auxiliary contacts included: none • Auxiliary contacts max: 2NO+2NC								
37 / 80	37 / 40	B-flange / B-flange	300	200	135	OTL100B4B	1SCA022562R8510	3.4
37 / 80	37 / 40	Blank / Blank	300	200	135	OTL100B4U	1SCA022562R8600	3.4
45 / 90	45 / 50	B-flange / B-flange	300	200	135	OTL125B4B	1SCA022562R9830	3.4
45 / 90	45 / 50	Blank / Blank	300	200	135	OTL125B4U	1SCA022562R9910	3.4

* Also available with lockable handle in On-position

Cable knock-outs as standard, compression glands have to be ordered separately.

Ordering information

Steel sheet enclosed switch-disconnectors, 16...125 A



OTL16...63BA4M



OTL100...125BA4B



OTL100...125BA4U

Enclosed switch-disconnectors, 4-pole, red-yellow handle, IP65

The delivery includes a red-yellow handle (I-O/ON-OFF), N- and PE-terminals. The handle has cover interlock and defeatable interlock function.

Cable entries from top and bottom

Max. motor output/ AC-23A			Dimensions					Weight /unit
415V	690V	Cable	Height	Width	Depth			
kW/A	kW/A	outlets/side	mm	mm	mm	Type	Order number	kg
Selector handle								
Auxiliary contacts included: none • Auxiliary contacts max: 2NO+2NC								
7.5 / 16	7.5 / 10	2xø25.5+ø16.5 / 2xø25.5+ø16.5	200	150	100	OTL16BA4M	1SCA022562R2070	1.7
9 / 20	9 / 11		200	150	100	OTL25BA4M	1SCA022562R3210	1.7
11 / 23	11 / 12		200	150	100	OTL32BA4M	1SCA022562R4360	1.7
Auxiliary contacts included: none • Auxiliary contacts max: 2NO+1NC								
22 / 45	15 / 20	2xø32.5+ø16.5 / 2xø32.5+ø16.5	200	150	100	OTL45BA4M	1SCA022562R5500	1.9
37 / 75	18.5 / 20		200	150	100	OTL63BA4M	1SCA022562R6730	1.9
Pistol handle								
Auxiliary contacts included: none • Auxiliary contacts max: 2NO+2NC								
37 / 80	37 / 40	B-flange / B-flange	300	200	135	OTL100BA4B	1SCA022562R9160	3.4
37 / 80	37 / 40	Blank / Blank	300	200	135	OTL100BA4U	1SCA022562R9240	3.4
45 / 90	45 / 50	B-flange / B-flange	300	200	135	OTL125BA4B	1SCA022563R0410	3.4
45 / 90	45 / 50	Blank / Blank	300	200	135	OTL125BA4U	1SCA022563R0500	3.4

Cable knock-outs as standard, compression glands have to be ordered separately.

Ordering information

Steel sheet enclosed switch-disconnectors, 16...125 A



OT125GLUU4BZ,
OT160EVLUU4BZ



OT125GLCC4BZ,
OT160EVLCC4BZ

Enclosed switch-disconnectors with blank cable entries, 4-pole, black handle, IP65

The delivery includes a black pistol handle (I-O/ON-OFF), N- and PE-terminals. The handle has cover interlock and defeatable interlock function. Blank cable entries, which are used also for fixing the enclosed switch-disconnectors.

Cable entries from top and bottom

Max. motor output/ AC-23A			Dimensions					Weight
415V	690V	Cable	Height	Width	Depth			/unit
kW/A	kW/A	outlets/side	mm	mm	mm	Type	Order number	kg
Auxiliary contacts included: none • Auxiliary contacts max: 2NO+1NC Include knock out holes: 10mm, 12.5mm, 20.5mm, 25.5mm, 32.5mm, 40.5mm								
55 / 125	110 / 125	Blank / Blank	400	250	180	OT125GLUU4BZ*	1SCA148277R1001	9.5

* Also available with lockable handle in On-position

Compression glands or flanges to be ordered separately.

Enclosed switch-disconnectors with C-flange cable entries, 4-pole, black handle, IP65

The delivery includes a black pistol handle (I-O/ON-OFF), N- and PE-terminals. The handle has cover interlock and defeatable interlock function. C-flange cable entries, which are used also for fixing the enclosed switch-disconnectors. One incoming and one outgoing cable are considered. When more than one cable entry is available, the delivery includes C-flange cover plates.

Cable entries from top and bottom

Max. motor output/ AC-23A			Dimensions					Weight
415V	690V	Cable	Height	Width	Depth			/unit
kW/A	kW/A	outlets/side	mm	mm	mm	Type	Order number	kg
Auxiliary contacts included: none • Auxiliary contacts max: 2NO+1NC								
55 / 125	110 / 125	C-flange / C-flange	400	250	180	OT125GLCC4BZ	1SCA148275R1001	9.5

Compression glands or flanges to be ordered separately.

Ordering information

Steel sheet enclosed switch-disconnectors, 16...125 A



OT90...125GLCC4TZ

Enclosed switch-disconnectors with auxiliary contact and 'Safety switch' -sticker, with C-flange cable entries, 4-pole, IP65, black handle

The delivery includes a black pistol handle (I-O/ON-OFF), PE-terminal and grey enclosure. Fixed cable entries with C-flange entries. Entry plate fixing profiles are used also for mounting the enclosed switch-disconnector. Auxiliary contacts are wired to the terminal blocks in sizes 200A...800A. Cover interlock and defeatable interlock included.

Cable entries from top and bottom

Max. motor output/ AC-23A		Cable openings/ side	Enclosure dimensions			Cover flanges included [pcs]	Type	Order number	Weight /unit
415V	690V		Height	Width	Depth				
kW/A	kW/A		mm	mm	mm				kg
Knock-outs: 9.5mm, 10mm, 12.5mm, 20.5mm, 25.5mm Auxiliary contacts included: 1NO+1NC • Auxiliary contacts max: 2NO+2NC									
45/90	75/90	C-flange/C-flange	400	250	180	0	OT90GLCC4TZ	1SCA148208R1001	9.6
55/125	110/125		400	250	180	0	OT125GLCC4TZ	1SCA148214R1001	9.6

Compression glands or flanges to be ordered separately.



OT90...125GLCC4AZ

Enclosed switch-disconnectors with auxiliary contact and 'Safety switch' -sticker, with C-flange cable entries, 4-pole, IP65, red-yellow handle

The delivery includes a red-yellow pistol type handle (I-O/ON-OFF), PE-terminal and grey enclosure. Fixed cable entries with C-flange entries. Entry plate fixing profiles are used also for mounting the enclosed switch-disconnector. Auxiliary contacts are wired to the terminal blocks in sizes 200A...800A. Cover interlock and defeatable interlock included.

Cable entries from top and bottom

Max. motor output/AC-23A		Cable openings/side	Enclosure dimensions			Cover flanges included [pcs]	Type	Order number	Weight /unit
415V	690V		Height	Width	Depth				
kW/A	kW/A		mm	mm	mm				kg
Knock-outs: 9.5mm, 10mm, 12.5mm, 20.5mm, 25.5mm Auxiliary contacts included: 1NO • Auxiliary contacts max: 2NO+2NC									
45/90	75/90	C-flange/C-flange	400	250	180	0	OT90GLCC4AZ	1SCA148205R1001	9.6
55/125	110/125		400	250	180	0	OT125GLCC4AZ	1SCA148213R1001	9.6

Compression glands or flanges to be ordered separately.

Ordering information

Steel sheet enclosed switch-disconnectors, 16...125 A



OTL16T6M



OTL25...36T6M



OTL25...36T6B



OTL75...90T6B



OTL75...90T6U



OTL16T6B

Enclosed switch-disconnectors with auxiliary contact and 'Safety switch' -sticker, 6-pole, IP65, black handle

The delivery includes a black handle (I-O/ON-OFF), PE-terminal and auxiliary contact 1NO. Knock-out type Cable outlets included, cable outlets also for control cable. Cable entries from top and bottom. Grey enclosure, equipped with hinges and lock. Cover interlock and defeatable interlock included.

Cable entries from top and bottom

Max. motor output/ AC-23A			Enclosure dimensions					
415V	690V	Cable outlets	Height	Width	Depth			Weight /unit
kW/A	kW/A	/side	mm	mm	mm	Type	Order number	kg
Selector handle								
Auxiliary contacts included: 1NO • Auxiliary contacts max: 2NO+2NC								
7,5/16	7,5/10	2xø25.5	200	150	100	OTL16T6M	1SCA022613R0570	1.8
Pistol handle								
Auxiliary contacts included: 1NO • Auxiliary contacts max: 1NO+1NC								
15/30	15/20	2xø32.5+ø16.5	250	165	110	OTL25T6M	1SCA022613R0650	2.5
15/30	15/20	B-flange/B-flange	250	165	110	OTL25T6B	1SCA022580R8090	3.4
22/45	15/20	2xø32.5+ø16.5/ 2xø32.5+ø16.5	250	165	110	OTL36T6M	1SCA022613R0730	2.5
22/45	15/20	B-flange/B-flange	250	165	110	OTL36T6B	1SCA022580R8170	3.2
Auxiliary contacts included: 1NO • Auxiliary contacts max: 1NO								
37/80	37/40	B-flange/B-flange	300	200	135	OTL75T6B	1SCA022546R1040	3.6
37/80	37/40	Blank/Blank	300	200	135	OTL75T6U	1SCA022730R9160	3.6
45/90	45/50	B-flange/B-flange	300	200	135	OTL90T6B	1SCA022546R1390	3.6
45/90	45/50	Blank/Blank	300	200	135	OTL90T6U	1SCA022730R9240	3.6

Cable entries from bottom

Max. motor output/ AC-23A			Enclosure dimensions					
415V	690V	Cable outlets	Height	Width	Depth			Weight /unit
kW/A	kW/A	/side	mm	mm	mm	Type	Order number	kg
Selector handle								
Auxiliary contacts included: 1NO • Auxiliary contacts max: 2NO+2NC								
7,5/16	7,5/10	Blank/B-flange	200	150	100	OTL16T6B	1SCA022580R5230	1.8

Compression glands or flanges to be ordered separately.

Ordering information

Steel sheet enclosed switch-disconnectors, 16...125 A



OT16A6M



OTL25A6B



OTL36A6M



OTL75...90A6U

Enclosed switch-disconnectors with auxiliary contact and 'Safety switch' -sticker, 6-pole, IP65, red-yellow handle

The delivery includes a red-yellow handle (I-O/ON-OFF), auxiliary contact 1NO and PE-terminal. Knock-out type Cable outlets included, cable outlets also for control cable. Grey enclosure, equipped with hings and lock. Cover interlock and defeatable interlock included.

Cable entries from top and bottom

Max. motor output/ AC-23A			Enclosure dimensions					Weight
415V	690V	Cable	Height	Width	Depth			/unit
kW/A	kW/A	openings/side	mm	mm	mm	Type	Order number	kg
Selector handle								
Auxiliary contacts included: 1NO • Auxiliary contacts max: 2NO+2NC								
7,5/16	7,5/10	2xø25.5/2xø25.5	200	150	100	OTL16A6M	1SCA022612R9560	1.8
Pistol handle								
Auxiliary contacts included: 1NO • Auxiliary contacts max: 1NO								
15/30	15/20	2xø32.5+ø16.5/ 2xø32.5+ø16.5	250	165	110	OTL25A6M	1SCA022612R9640	2.5
15/30	15/20	B-flange/B-flange	250	165	110	OTL25A6B	1SCA022745R6890	3.4
22/45	15/20	2xø32.5+ø16.5/ 2xø32.5+ø16.5	250	165	110	OTL36A6M	1SCA022612R9720	2.5
22/45	15/20	B-flange/B-flange	250	165	110	OTL36A6B	1SCA022745R6970	3.4
37/80	37/40		300	200	135	OTL75A6B	1SCA022555R7740	3.6
37/80	37/40	Blank/Blank	300	200	135	OTL75A6U	1SCA022696R4830	3.6
45/90	45/50	B-flange/B-flange	300	200	135	OTL90A6B	1SCA022555R8040	3.6
45/90	45/50	Blank/Blank	300	200	135	OTL90A6U	1SCA022708R3090	3.6

Compression glands or flanges to be ordered separately.

Ordering information

Steel sheet enclosed switch-disconnectors, 16...125 A



OTL16...32B6M



OTL45...63B6B



OTL45...63B6U



OT125GLUU6BZ

Enclosed switch-disconnectors, 6-pole, black handle, IP65

The delivery includes a black handle (I-O/ON-OFF), N- and PE-terminals. The handle has cover interlock and defeatable interlock function.

Cable entries from top and bottom

Max. motor output/ AC-23A			Dimensions					Weight
415V	690V	Cable	Height	Width	Depth			/unit
kW/A	kW/A	outlets/side	mm	mm	mm	Type	Order number	kg
Selector handle Auxiliary contacts are not included.								
7.5 / 16	7.5 / 10	2xø25.5+ø16.5 / 2xø25.5+ø16.5	200	150	100	OTL16B6M	1SCA022562R1690	1.8
9 / 20	9 / 11		200	150	100	OTL25B6M	1SCA022562R2820	1.8
11 / 23	11 / 12		200	150	100	OTL32B6M	1SCA022562R4010	1.8
Pistol handle Auxiliary contacts included: none • Auxiliary contacts max: 1NO+1NC								
22 / 45	15 / 20	B-flange / B-flange	300	200	135	OTL45B6B	1SCA022610R4730	3.5
22 / 45	15 / 20	Blank / Blank	300	200	135	OTL45B6U*	1SCA022610R4810	3.5
37 / 75	18.5 / 20	B-flange / B-flange	300	200	135	OTL63B6B	1SCA022610R4900	3.5
37 / 75	18.5 / 20	Blank / Blank	300	200	135	OTL63B6U*	1SCA022610R5030	3.5
Pistol handle The delivery includes blank cable entries, which are used also for fixing the enclosed switch-disconnectors. Auxiliary contacts included: none • Auxiliary contacts max: 2NO+2NC								
55 / 125	110 / 125	Blank / Blank	400	400	230	OT125GLUU6BZ	1SCA148482R1001	16.4

* Also available with lockable handle in On-position
Cable knock-outs as standard, compression glands have to be ordered separately.

Ordering information

Steel sheet enclosed switch-disconnectors, 16...125 A



OTL16...32BA6M



OTL45...63BA6U



OTL45...63BA6M

Enclosed switch-disconnectors, 6-pole, red-yellow handle, IP65

The delivery includes a red-yellow handle (I-O/ON-OFF), N- and PE-terminals. The handle has cover interlock and defeatable interlock function.

Cable entries from top and bottom

Max. motor output/ AC-23A			Dimensions					Weight
415V	690V	Cable	Height	Width	Depth			/unit
kW/A	kW/A	outlets/side	mm	mm	mm	Type	Order number	kg
Selector handle Auxiliary contacts included: none • Auxiliary contacts max: 0NO+0NC								
7.5 / 16	7.5 / 10	2xø25.5+ø16.5 / 2xø25.5+ø16.5	200	150	100	OTL16BA6M	1SCA022562R2230	1.8
9 / 20	9 / 11		200	150	100	OTL25BA6M	1SCA022562R3470	1.8
11 / 23	11 / 12		200	150	100	OTL32BA6M	1SCA022562R4520	1.8
Pistol handle Auxiliary contacts included: none • Auxiliary contacts max: 1NO+1NC								
22 / 45	15 / 20	B-flange / B-flange	300	200	135	OTL45BA6B	1SCA022610R5110	3.5
22 / 45	15 / 20	Blank / Blank	300	200	135	OTL45BA6U	1SCA022610R5200	3.5
37 / 75	18.5 / 20	B-flange / B-flange	300	200	135	OTL63BA6B	1SCA022610R5380	3.5
37 / 75	18.5 / 20	Blank / Blank	300	200	135	OTL63BA6U	1SCA022610R5460	3.5

Cable knock-outs as standard, compression glands have to be ordered separately.

Ordering information

Steel sheet enclosed switch-disconnectors, 16...125 A



OT90...125GAUR6TZ

Enclosed switch-disconnectors with auxiliary contact and 'Safety switch' -sticker with ring-flange cable entries, 6-pole, IP65, black handle

The delivery includes a black pistol handle(I-O/ON-OFF), PE-terminal and grey enclosure. Fixed cable entry with ring-flange entries. Entry plate fixing profiles are used also for mounting the enclosed switch-disconnector. Auxiliary contacts are wired to the terminal blocks in sizes 200A...800A. Cover interlock and defeatable interlock included.

Cable entries from top and bottom

Max. motor output/ AC-23A		Cable openings /side	Enclosure dimensions			Cover flanges included [pcs]	Type	Order number	Weight /unit
415V	690V		Height	Width	Depth				
kW/A	kW/A		mm	mm	mm				kg
Knock-outs: 3x10mm, 12.5mm, 20.5mm, 25.5mm, 32.5mm Auxiliary contacts included: 2NO • Auxiliary contacts max: 2NO+2NC									
45/90	75/90	4xring-flange/ 4xring-flange	400	400	230	4	OT90GLRR6TZ	1SCA148475R1001	16.4
55/125	110/125		400	400	230	4	OT125GLRR6TZ	1SCA148479R1001	16.4
55/125	110/125		400	400	230	4	OT125GTRR6TZ	1SCA148602R1001	16.4

Cable entries from bottom

Knock-outs: 3x10mm, 12.5mm, 20.5mm, 25.5mm, 32.5mm Auxiliary contacts included: 2NO+2NC • Auxiliary contacts max: 2NO+2NC									
45/90	75/90	Blank/ 4xring-flange	600	400	230	4	OT90GAUR6TZ	1SCA148493R1001	21.31
55/125	110/125		600	400	230	4	OT125GAUR6TZ	1SCA148497R1001	21.31

Compression glands or flanges to be ordered separately.



OT90...125GLRR6AZ



OT90...125GAUR6AZ

Enclosed switch-disconnectors with auxiliary contact and 'Safety switch' -sticker with ring-flange cable entries, 6-pole, IP65, red-yellow handle

The delivery includes a red-yellow pistol type handle (I-O/ON-OFF), PE-terminal and grey enclosure. Fixed divided cable entry with ring-flange entries. Entry plate fixing profiles are used also for mounting the enclosed switch-disconnector. Auxiliary contacts are wired to the terminal blocks in sizes 200A...800A. Cover interlock and defeatable interlock included.

Cable entries from top and bottom

Max. motor output/AC-23A		Cable openings/side	Enclosure dimensions			Cover flanges included [pcs]	Type	Order number	Weight /unit
415V	690V		Height	Width	Depth				
kW/A	kW/A		mm	mm	mm				kg
Knock-outs: 3x10mm, 12.5mm, 20.5mm, 25.5mm, 32.5mm Auxiliary contacts included: 2NO • Auxiliary contacts max: 2NO+2NC									
45/90	75/90	4xring-flange/ 4xring-flange	400	400	230	4	OT90GLRR6AZ	1SCA148474R1001	16.4
55/125	110/125		400	400	230	4	OT125GLRR6AZ	1SCA148478R1001	16.4

Cable entries from bottom

Knock-outs: 3x10mm, 12.5mm, 20.5mm, 25.5mm, 32.5mm Auxiliary contacts included: 2NO • Auxiliary contacts max: 2NO+2NC									
45/90	75/90	Blank/ 4xring-flange	600	400	230	4	OT90GAUR6AZ	1SCA148492R1001	21.31
55/125	110/125		600	400	230	4	OT125GAUR6AZ	1SCA148496R1001	21.31

Compression glands or flanges to be ordered separately.

Ordering information

Steel sheet enclosed switch-disconnectors, 16...125 A



OT90GLCC6TZ,
OT125GLCC6TZ



OT90GAUC6TZ

Enclosed switch-disconnectors with auxiliary contact and 'Safety switch' -sticker with C-flange cable entries, 6-pole, IP65, black handle

The delivery includes a black pistol handle (I-O/ON-OFF), PE-terminal and grey enclosure. Fixed cable entries with C-flange entries. Entry plate fixing profiles are used also for mounting the enclosed switch-disconnector. Auxiliary contacts are wired to the terminal blocks in sizes 200A...800A. Cover interlock and defeatable interlock included.

Cable entries from top and bottom

Max. motor output/ AC-23A		Cable openings/ side	Enclosure dimensions			Cover flanges included [pcs]	Type	Order number	Weight /unit
415V	690V		Height	Width	Depth				
kW/A	kW/A		mm	mm	mm				kg
Knock-outs: 9.5mm, 10mm, 12.5mm, 20.5mm, 25.5mm Auxiliary contacts included: 2NO • Auxiliary contacts max: 2NO+2NC									
45/90	75/90	2xC-flange/ 2xC-flange	400	400	230	2	OT90GLCC6TZ	1SCA148473R1001	16.4
55/125	110/125		400	400	230	2	OT125GLCC6TZ	1SCA148477R1001	16.4

Cable entries from bottom

Max. motor output/ AC-23A		Cable openings/ side	Enclosure dimensions			Cover flanges included [pcs]	Type	Order number	Weight /unit
415V	690V		Height	Width	Depth				
kW/A	kW/A		mm	mm	mm				kg
Knock-outs: 9.5mm, 10mm, 12.5mm, 20.5mm, 25.5mm Auxiliary contacts included: 2NO • Auxiliary contacts max: 2NO+2NC									
45/90	75/90	Blank/ 2xC-flange	600	400	230	1	OT90GAUC6TZ	1SCA148491R1001	21.31
Auxiliary contacts included: 1NO+1NC • Auxiliary contacts max: 2NO+2NC									
55/125	110/125	Blank/ 2xC-flange	600	400	230	1	OT125GAUC6TZ	1SCA148495R1001	21.3

Compression glands or flanges to be ordered separately.

Ordering information

Steel sheet enclosed switch-disconnectors, 16...125 A



OT90...125GLCC6AZ



OT90...125GAUC6AZ

Enclosed switch-disconnectors with auxiliary contact and 'Safety switch' -sticker, with C-flange cable entries, 6-pole, IP65, red-yellow handle

The delivery includes a red-yellow pistol type handle (I-O/ON-OFF), PE-terminal and grey enclosure. Fixed divided cable entry with C-flange entries. Entry plate fixing profiles are used also for mounting the enclosed switch-disconnector. Auxiliary contacts are wired to the terminal blocks in sizes 200A...800A. Cover interlock and defeatable interlock included.

Cable entries from top and bottom

Max. motor output/ AC-23A			Enclosure dimensions			Cover flanges included			Weight /unit
415V	690V	Cable	Height	Width	Depth				
kW/A	kW/A	openings/side	mm	mm	mm	[pcs]	Type	Order number	kg
Knock-outs: 9.5mm, 10mm, 12.5mm, 20.5mm, 25.5mm Auxiliary contacts included: 2NO+2NC • Auxiliary contacts max: 2NO+2NC									
45/90	75/90	2xC-flange/ 2xC-flange	400	400	230	2	OT90GLCC6AZ	1SCA148472R1001	16.4
Knock-outs: 9.5mm, 10mm, 12.5mm, 20.5mm, 25.5mm Auxiliary contacts included: 1NO+1NC • Auxiliary contacts max: 2NO+2NC									
55/125	110/125	2xC-flange/ 2xC-flange	400	400	230	2	OT125GLCC6AZ	1SCA148476R1001	16.4

Cable entries from bottom

Max. motor output/AC-23A			Enclosure dimensions			Cover flanges included			Weight /unit
415V	690V	Cable	Height	Width	Depth				
kW/A	kW/A	openings/side	mm	mm	mm	[pcs]	Type	Order number	kg
Knock-outs: 9.5mm, 10mm, 12.5mm, 20.5mm, 25.5mm Auxiliary contacts included: 2NO • Auxiliary contacts max: 2NO+2NC									
45/90	75/90	Blank/2xC-flange	600	400	230	1	OT90GAUC6AZ	1SCA148490R1001	21.31
Knock-outs: 9.5mm, 10mm, 12.5mm, 20.5mm, 25.5mm Auxiliary contacts included: 1NO+1NC • Auxiliary contacts max: 2NO+2NC									
55/125	110/125	Blank/2xC-flange	600	400	230	1	OT125GAUC6AZ	1SCA148494R1001	21.31

Compression glands or flanges to be ordered separately.

Ordering information

Steel sheet enclosed switch-disconnectors, 16...125 A



OT125GLCC6BZ

Enclosed switch-disconnectors with C-flange cable entries, 6-pole, black handle, IP65

The delivery includes a black pistol handle (I-O/ON-OFF), N- and PE-terminals. The handle has cover interlock and defeatable interlock function. C-flange cable plates, which are used also for fixing the enclosed switch-disconnectors. One incoming and one outgoing cable are considered. When more than one cable entry is available, the delivery includes C-flange cover plates.

Cable entries from top and bottom - C-flange cable entries

Max. motor output/ AC-23A			Dimensions					Weight
415V	690V	Cable	Height	Width	Depth			/unit
kW/A	kW/A	outlets/side	mm	mm	mm	Type	Order number	kg
Auxiliary contacts included: none • Auxiliary contacts max: 2NO+1NC								
55 / 125	110 / 125	2xC-flange / 2xC-flange	400	400	230	OT125GLCC6BZ	1SCA148480R1001	16.4

Cable knock-outs as standard, compression glands have to be ordered separately.

Ordering information

Steel sheet enclosed EMC enclosed switch-disconnectors, 16...125 A



OT16...36ETMM3TE

EMC enclosed switch-disconnectors with auxiliary contact and 'Safety switch' -sticker, 3-pole, IP65, black handle

The delivery includes a black handle (I-O/ON-OFF) and PE-terminal. Knock-out openings included, cable outlets also for control cable. Compression glands have to be ordered separately, see accessories for EMC enclosed switch-disconnectors. Equipped with hinges and lock, grey enclosure. Cover interlock and defeatable interlock included.

Cable entries from top and bottom

Max. motor output/ AC-23A			Enclosure dimensions					
415V	690V	Cable	Height	Width	Depth			Weight /unit
kW/A	kW/A	openings/side	mm	mm	mm	Type	Order number	kg
Selector handle								
Auxiliary contacts included: 1NO • Auxiliary contacts max: 2NO+2NC								
7,5/16	7,5/10	2xø25.5+ø16.5/ 2xø25.5+ø16.5	200	150	100	OT16ETMM3TE	1SCA022734R5980	1.7
Auxiliary contacts included: 1NO • Auxiliary contacts max: 2NO+1NC								
15/30	15/20	2xø32.5+ø16.5/ 2xø32.5+ø16.5	200	150	100	OT25ETMM3TE	1SCA022734R6010	1.9
22/45	15/20		200	150	100	OT36ETMM3TE	1SCA022734R6100	1.9

Threaded knock-out openings, compression glands have to be ordered separately.
The cables should be shielded to obtain proper EMC protection.



OT16...36ETMM6TE

EMC enclosed switch-disconnectors with auxiliary contact and 'Safety switch' -sticker, 6-pole, IP65, black handle

The delivery includes a black handle (I-O/ON-OFF) and PE-terminal. Knock-out openings included, cable outlets also for control cable. Compression glands have to be ordered separately, see Accessories for EMC enclosed switch-disconnectors. Equipped with hinges and lock, grey enclosure. Cover interlock and defeatable interlock included.

Cable entries from top and bottom

Max. motor output/ AC-23A			Enclosure dimensions					
415V	690V	Cable	Height	Width	Depth			Weight /unit
kW/A	kW/A	openings/side	mm	mm	mm	Type	Order number	kg
Pistol handle								
Auxiliary contacts included: 1NO • Auxiliary contacts max: 2NO+2NC								
7,5/16	7,5/10	2xø25.5+ø16.5/ 2xø25.5+ø16.5	200	150	100	OT16ETMM6TE	1SCA022739R3870	1.9
22/45	15/20	2xø32.5+ø16.5/ 2xø32.5+ø16.5	250	165	110	OT36ETMM6TE	1SCA022739R4090	3.7

Threaded knock-out openings, compression glands have to be ordered separately.
The cables should be shielded to obtain proper EMC protection.

Ordering information

Steel sheet enclosed EMC enclosed switch-disconnectors, 16...125 A



OT16...25ETMM3AE



OT36...63ETMM3AE

EMC enclosed switch-disconnectors with auxiliary contact and 'Safety switch' -sticker, 3-pole, IP65, red-yellow handle

The delivery includes a red-yellow handle (I-O/ON-OFF), auxiliary contact 1NO and PE-terminal. Knock-out openings included, cable outlets also for control cable. Compression glands have to be ordered separately, see accessories for EMC enclosed switch-disconnectors. Equipped with hinges and lock, grey enclosure. Cover interlock and defeatable interlock included.

Cable entries from top and bottom

Max. motor output/ AC-23A			Enclosure dimensions					
415V	690V	Cable	Height	Width	Depth			Weight /unit
kW/A	kW/A	openings/side	mm	mm	mm	Type	Order number	kg
Selector handle								
Auxiliary contacts included: 1NO • Auxiliary contacts max: 2NO+2NC								
7,5/16	7,5/10	2xø25.5+ø16.5/ 2xø25.5+ø16.5	200	150	100	OT16ETMM3AE	1SCA022742R0780	17
Auxiliary contacts included: 1NO • Auxiliary contacts max: 2NO+1NC								
15/30	15/20	2xø25.5+ø16.5/ 2xø25.5+ø16.5	200	150	100	OT25ETMM3AE	1SCA022742R0860	1.9
Pistol handle								
Auxiliary contacts included: 1NO • Auxiliary contacts max: 2NO+1NC								
22/45	15/20	2xø25.5+ø16.5/ 2xø25.5+ø16.5	200	150	100	OT36ETMM3AE	1SCA022742R0940	1.9
30/63	30/35		200	150	100	OT63ETMM3AE	1SCA022742R1080	2.4



OT16...25ETMM6AE



OT36EMM6AE

EMC enclosed switch-disconnectors with auxiliary contact and 'Safety switch' -sticker, 6-pole, IP65, red-yellow handle

The delivery includes a red-yellow handle (I-O/ON-OFF), auxiliary contact 1NO and PE-terminal. Knock-out openings included, cable outlets also for control cable. Compression glands have to be ordered separately, see accessories for EMC enclosed switch-disconnectors. Equipped with hinges and lock, grey enclosure. Cover interlock and defeatable interlock included.

Cable entries from bottom

Max. motor output/ AC-23A			Enclosure dimensions					
415V	690V	Cable	Height	Width	Depth			Weight /unit
kW/A	kW/A	openings/side	mm	mm	mm	Type	Order number	kg
Selector handle								
Auxiliary contacts included: 1NO • Auxiliary contacts max: 2NO+2NC								
7,5/16	7,5/10	Blank/2xø25.5+ø16.5	200	150	100	OT16ETMM6AE	1SCA022742R1160	19
15/30	15/20	2xø32.5+ø16.5/ 2xø32.5+ø16.5	200	165	110	OT25ETMM6AE	1SCA022742R1240	
Pistol handle								
Auxiliary contacts included: 1NO • Auxiliary contacts max: 2NO+2NC								
22/45	15/20	2xø32.5+ø16.5/ 2xø32.5+ø16.5	250	165	110	OT36ETMM6AE	1SCA022742R1320	4

Threaded knock-out openings, compression glands have to be ordered separately.
The cables should be shielded to obtain proper EMC protection.

Ordering information

Steel sheet enclosed EMC enclosed switch-disconnectors, 16...125 A



OT90GTUU3TZ

EMC enclosed switch-disconnectors with auxiliary contact and 'Safety switch' -sticker with blank cable entries, 3-pole, IP65, black handle

The delivery includes a black pistol handle (I-O/ON - OFF indication), grey enclosure. PE-terminal. Blank cable entry. Entry plate fixing profiles are used also for mounting the enclosed switch-disconnector. Cover interlock and defeatable interlock included.

Cable entries from top and bottom

Max. motor output/AC-23A			Enclosure dimensions			Cover flanges included			Weight
415V	690V	Cable	Height	Width	Depth				/unit
kW/A	kW/A	openings/side	mm	mm	mm	[pcs]	Type	Order number	kg
Knock-outs: 10mm, 12.5mm, 20.5mm, 25.5mm, 32.5mm, 40.5mm Auxiliary contacts included: 1NO+1NC • Auxiliary contacts max: 2NO+2NC									
45/90	75/90	Blank/Blank	400	250	180	-	OT90GTUU3TZ	1SCA148210R1001	9.4
55/125	110/125	Blank/Blank	400	250	180	-	OT125GTUU3TZ	1SCA148216R1001	9.4

Compression glands have to be ordered separately.
The cables should be shielded to obtain proper EMC protection.



OT90...125GUUR3TZ

EMC enclosed switch-disconnectors with auxiliary contact and 'Safety switch' -sticker with ring-flange cable entries, 3-pole, IP65, black handle

The delivery includes a black pistol handle (I-O/ON-OFF indication), grey enclosure. PE-terminal. Fixed cable entry with ring-flange entries. Entry plate fixing profiles are used also for mounting the enclosed switch-disconnector. Cover interlock and defeatable interlock included.

Cable entries from bottom

Max. motor output/AC-23A			Enclosure dimensions			Cover flanges included			Weight
415V	690V	Cable	Height	Width	Depth				/unit
kW/A	kW/A	openings/side	mm	mm	mm	[pcs]	Type	Order number	kg
Knock-outs: 3x10mm, 12.5mm, 20.5mm, 25.5mm, 32.5mm Auxiliary contacts included: 1NO+1NC • Auxiliary contacts max: 2NO+2NC									
45/90	75/90	Blank/4xring-flange	400	400	230	4	OT90GUUR3TZ	1SCA148438R1001	14.8
Knock-outs: 3x10mm, 12.5mm, 20.5mm, 25.5mm, 32.5mm Auxiliary contacts included: 1NO+1NC • Auxiliary contacts max: 2NO+1NC									
55/125	110/125	Blank/4xring-flange	400	400	230	4	OT125GUUR3TZ	1SCA148444R1001	14.8

Cable entries from bottom

Knock-outs: 3x10mm, 12.5mm, 20.5mm, 25.5mm, 32.5mm Auxiliary contacts included: 1NO+1NC • Auxiliary contacts max: 2NO+2NC									
45/90	75/90	Blank/4xring-flange	400	400	230	4	OT90GUUR3TZ	1SCA148438R1001	14.8
Knock-outs: 3x10mm, 12.5mm, 20.5mm, 25.5mm, 32.5mm Auxiliary contacts included: 1NO+1NC • Auxiliary contacts max: 2NO+1NC									
55/125	110/125	Blank/4xring-flange	400	400	230	4	OT125GUUR3TZ	1SCA148444R1001	14.8

Ring-flanges have to be ordered separately.
The ordering information for ring-flanges, see Accessories for EMC enclosed switch-disconnectors.
The cables should be shielded to obtain proper EMC protection.

Ordering information

Steel sheet enclosed EMC enclosed switch-disconnectors, 16...125 A



OT90...125GTUU3AZ

EMC enclosed switch-disconnectors with auxiliary contact and 'Safety switch' -sticker with blank cable entries, 3-pole, IP65, red-yellow handle

The delivery includes a red-yellow pistol handle (I-O/ON - OFF indication), grey enclosure. Auxiliary contacts according to the table below. PE-terminal. Blank cable entry. Entry plate fixing profiles are used also for mounting the enclosed switch-disconnector. Cover interlock and defeatable interlock included.

Cable entries from top and bottom

Max. motor output/ AC-23A		Cable openings/ side	Enclosure dimensions			Cover flanges included [pcs]	Type	Order number	Weight /unit
415V	690V		Height	Width	Depth				
kW/A	kW/A		mm	mm	mm				kg
Knock-outs: 10mm, 12.5mm, 20.5mm, 25.5mm, 32.5mm, 40.5mm Auxiliary contacts included: 1NO+1NC • Auxiliary contacts max: 2NO+2NC									
45/90	75/90	Blank/Blank	400	250	180	-	OT90GTUU3AZ	1SCA148209R1001	9.4
55/125	110/125		400	250	180	-	OT125GTUU3AZ	1SCA148215R1001	9.4

Compression glands have to be ordered separately.
The cables should be shielded to obtain proper EMC protection.



OT90...125GUUR3AZ

EMC enclosed switch-disconnectors with auxiliary contact and 'Safety switch' -sticker with ring-flange cable entries, 3-pole, IP65, red-yellow handle

The delivery includes a red-yellow pistol handle (I-O/ON - OFF indication), grey enclosure. Auxiliary contacts according to the table below. PE-terminal. Fixed cable entry with ring-flange entries. Entry plate fixing profiles are used also for mounting the enclosed switch-disconnector. Cover interlock and defeatable interlock included.

Cable entries from bottom

Max. motor output/ AC-23A		Cable openings/side	Enclosure dimensions			Cover flanges included [pcs]	Type	Order number	Weight /unit
415V	690V		Height	Width	Depth				
kW/A	kW/A		mm	mm	mm				kg
Knock-outs: 3x10mm, 12.5mm, 20.5mm, 25.5mm, 32.5mm Auxiliary contacts included: 1NO+1NC • Auxiliary contacts max: 2NO+1NC									
45/90	75/90	Blank/4xring-flange	400	400	230	4	OT90GUUR3AZ	1SCA148437R1001	14.8
55/125	110/125		400	400	230	4	OT125GUUR3AZ	1SCA148443R1001	14.8

Ring-flanges have to be ordered separately.
The ordering information for ring-flanges, see Accessories for EMC enclosed switch-disconnectors.
The cables should be shielded to obtain proper EMC protection.

Ordering information

Steel sheet enclosed EMC enclosed switch-disconnectors, 16...125 A



OT90...125GTRR6TZ

EMC enclosed switch-disconnectors with auxiliary contact and 'Safety switch' -sticker with ring-flange cable entries, 6-pole, IP65, black handle

The delivery includes a black pistol handle (I-O/ON-OFF) and PE-terminal. Fixed cable entries with ring-flange entries. Entry plate fixing profiles are used also for mounting the enclosed switch-disconnector. Cover interlock and defeatable interlock included.

Cable entries from top and bottom

Max. motor output/AC-23A			Enclosure dimensions			Cover flanges included			Weight /unit
415V	690V	Cable	Height	Width	Depth				
kW/A	kW/A	openings/side	mm	mm	mm	[pcs]	Type	Order number	kg
Knock-outs: 3x10mm, 12.5mm, 20.5mm, 25.5mm, 32.5mm Auxiliary contacts included: 2NO • Auxiliary contacts max: 2NO+2NC									
45/90	75/90	4xring-flange/ 4xring-flange	400	400	230	4	OT90GTRR6TZ	1SCA148604R1001	16.4
55/125	110/125		400	400	230	4	OT125GTRR6TZ	1SCA148602R1001	16.4
55/125	110/125	Blank/ Blank	400	400	230	-	OT125GTUU6TZ[1)]	1SCA157028R1001	16.4

[1)] Include blank cable entries
Ring-flanges have to be ordered separately.
The ordering information for ring-flanges, see Accessories for EMC enclosed switch-disconnectors.
The cables should be shielded to obtain proper EMC protection.



OT90...125GTRR6AZ

EMC switch-disconnectors with auxiliary contact and 'Safety switch' -sticker with ring-flange cable entries, 6-pole, IP65, red-yellow handle

The delivery includes a red-yellow handle (I-O/ON-OFF) and PE-terminal. Fixed cable entries with ring-flange entries. Entry plate fixing profiles are used also for mounting the enclosed switch-disconnector. Cover interlock and defeatable interlock included.

Cable entries from top and bottom

Max. motor output/AC-23A			Enclosure dimensions			Cover flanges included			Weight /unit
415V	690V	Cable	Height	Width	Depth				
kW/A	kW/A	openings/side	mm	mm	mm	[pcs]	Type	Order number	kg
Knock-outs: 3x10mm, 12.5mm, 20.5mm, 25.5mm, 32.5mm Auxiliary contacts included: 2NO+0NC • Auxiliary contacts max: 2NO+2NC									
45/90	75/90	4xring-flange/ 4xring-flange	400	400	230	4	OT90GTRR6AZ	1SCA148603R1001	16.4
Auxiliary contacts included: 4NO+2NC • Auxiliary contacts max: 4NO+2NC									
55/125	110/125	4xring-flange/ 4xring-flange	400	400	230	4	OT125GTRR6AZ	1SCA148601R1001	16.4

Ring-flanges have to be ordered separately.
The ordering information for ring-flanges, see Accessories for EMC enclosed switch-disconnectors.
The cables should be shielded to obtain proper EMC protection.

Ordering Information

Stainless steel enclosed switch-disconnectors, 16...125 A

Type keys

Stainless steel enclosed switch-disconnectors, type OTL_

Main type	
Stainless steel enclosed switch-disconnector	OTR

Switch size

Number of poles

OTR 16 B 3 M

Construction	
Enclosed switch-disconnector with auxiliary contact and 'Safety switch' sticker, red/yellow handle	A
Enclosed switch-disconnector with auxiliary contact and 'Safety switch' sticker, black handle	T
Enclosed switch-disconnector (without auxiliary contacts), black handle	B
Enclosed switch-disconnector (without auxiliary contacts), red yellow handle	BA

Cable outlets	
Metric cable outlets	M
Without cable openings	U
B-flange	B

Stainless steel enclosed switch-disconnectors, type OT_

Stainless steel enclosure, cable entry	
Cable entry Top/Bottom	R
Cable entry Bottom/Bottom	S

Main type

Switch size

Number of poles

OT 90G R U R 3 T Z

Enclosed switch-disconnector	
Enclosed switch-disconnector with auxiliary contact and 'Safety switch' sticker, black handle	T
Enclosed switch-disconnector with auxiliary contact and 'Safety switch' sticker, red/yellow handle	A
Enclosed switch-disconnector without auxiliary contact, black handle	B
Enclosed switch-disconnector without auxiliary contact, red/yellow handle	BA

IP class	
IP65	Z

Upper end configuration for the enclosure	
Space for B-flange	B
Space for C-flange	C
Space for ring flange	R
Space for M glands	M
Closed ends	U

Lower end configuration for the enclosure	
Space for B-flange	B
Space for C-flange	C
Space for ring flange	R
Space for M glands	M
Closed ends	U

Ordering information

Stainless steel enclosed switch-disconnectors, 16...125 A


OTR16T3M


OTR25...36T3M


OTR63T3M


OTR75...90T3B


OTR80...125T3M


OTR16...63T3B


OT125GSUM3TZ

Enclosed switch-disconnectors with auxiliary contact and 'Safety switch' -sticker, 3-pole, IP65, black handle

The delivery includes a black handle (I-O/ON-OFF), auxiliary contact 1NO and PE-terminal. Knock-out type Cable outlets included, cable outlets also for control cable. Equipped with hings and lock. Cover interlock and defeatable interlock included. The products are EMC approved.

Cable entries from top and bottom

Max. motor output/ AC-23A			Enclosure dimensions					Weight
415V	690V	Cable	Height	Width	Depth			/unit
kW/A	kW/A	openings/side	mm	mm	mm	Type	Order number	kg
Selector handle								
Auxiliary contacts included: 1NO • Auxiliary contacts max: 2NO+2NC								
7,5/16	7,5/10	2xø25.5/2xø25.5	200	150	100	OTR16T3M	1SCA022613R2780	1.7
Auxiliary contacts included: 1NO • Auxiliary contacts max: 2NO+1NC								
15/30	15/20	2xø32.5+ø16.5/ 2xø32.5+ø16.5	200	150	100	OTR25T3M	1SCA022613R3910	1.9
22/45	15/20		200	150	100	OTR36T3M	1SCA022613R4050	1.9
Pistol handle								
Auxiliary contacts included: 1NO • Auxiliary contacts max: 2NO+2NC								
30/63	30/35	2xø32.5+ø16.5/ 2xø32.5+ø16.5	250	165	110	OTR63T3M	1SCA022613R4130	2.4
37/80	37/40	B-flange/B-flange	300	200	135	OTR75T3B	1SCA022567R1280	3.3
37/80	37/60	2xø50.5+ø16.5 / 2xø50.5+ø16.5	300	200	135	OTR80T3M	1SCA161467R1001	3,3
45/90	45/50	B-flange/B-flange	300	200	135	OTR90T3B	1SCA022567R1440	3.3
45/90	37/60	2xø50.5+ø16.5 / 2xø50.5+ø16.5	300	200	135	OTR90T3M	1SCA161469R1001	3,3
55/125	37/60		300	200	135	OTR125T3M	1SCA161471R1001	3,3

Cable entries from bottom

Max. motor output/ AC-23A			Enclosure dimensions					Weight
415V	690V	Cable	Height	Width	Depth			/unit
kW/A	kW/A	openings/side	mm	mm	mm	Type	Order number	kg
Selector handle								
Auxiliary contacts included: 1NO • Auxiliary contacts max: 2NO+2NC								
7,5/16	7,5/10	Blank/B-flange	200	150	100	OTR16T3B	1SCA022572R0160	1.7
Auxiliary contacts included: 1NO • Auxiliary contacts max: 2NO+2NC								
15/30	15/20	Blank/B-flange	200	150	100	OTR25T3B	1SCA022572R0240	1.9
22/45	15/20		200	150	100	OTR36T3B	1SCA022572R0320	1.9
30/63	30/35		200	150	100	OTR63T3B	1SCA022572R0410	2
55/125	75/125	Blank / 2xø50.5+ø20.5	400	400	230	OT125GSUM3TZ	1SCA161473R1001	14,8

Compression glands or flanges to be ordered separately.

Ordering information

Stainless steel sheet enclosed switch-disconnectors, 16...125 A



OTR16A3M



OTR25...36A3M



OTR63A3M



OTR80...125A3M



OTR16...63A3B



OT125GSUM3AZ

Enclosed switch-disconnectors with auxiliary contact and 'Safety switch' -sticker, 3-pole, IP65, red-yellow handle

The delivery includes a red-yellow handle (I-O/ON-OFF), auxiliary contact 1NO and PE-terminal. Knock-out type Cable outlets included, cable outlets also for control cable. Cover interlock and defeatable interlock included. The products are EMC approved.

Cable entries from top and bottom

Max. motor output/ AC-23A			Enclosure dimensions					Weight
415V	690V	Cable	Height	Width	Depth			/unit
kW/A	kW/A	openings/side	mm	mm	mm	Type	Order number	kg
Selector handle								
Auxiliary contacts included: 1NO • Auxiliary contacts max: 2NO+2NC								
7,5/16	7,5/10	2xø25.5/2xø25.5	200	150	100	OTR16A3M	1SCA022613R2860	1.7
Auxiliary contacts included: 1NO • Auxiliary contacts max: 2NO+1NC								
15/30	15/20	2xø32.5+ø16.5/ 2xø32.5+ø16.5	200	150	100	OTR25A3M	1SCA022613R2940	1.9
22/45	15/20		200	150	100	OTR36A3M	1SCA022613R3080	1.9
Pistol handle								
Auxiliary contacts included: 1NO • Auxiliary contacts max: 2NO+2NC								
30/63	30/35	2xø32.5+ø16.5/ 2xø32.5+ø16.5	250	165	110	OTR63A3M	1SCA022613R3160	2.4
37/80	37/40	B-flange/B-flange	300	200	135	OTR75A3B	1SCA022567R8960	3.3
37 / 80	37 / 60	2xø50.5+ø16.5 / 2xø50.5+ø16.5	300	200	135	OTR80A3M	1SCA161466R1001	3.3
45/90	45/50	B-flange/B-flange	300	200	135	OTR90A3B	1SCA022567R9180	3.3
45 / 90	45 / 70	2xø50.5+ø16.5 /	300	200	135	OTR90A3M	1SCA161468R1001	3.3
55 / 125	75 / 125	2xø50.5+ø16.5	300	200	135	OTR125A3M	1SCA161470R1001	3.4

Cable entries from bottom

Max. motor output/ AC-23A			Enclosure dimensions					Weight
415V	690V	Cable	Height	Width	Depth			/unit
kW/A	kW/A	openings/side	mm	mm	mm	Type	Order number	kg
Selector handle								
Auxiliary contacts included: 1NO • Auxiliary contacts max: 2NO+2NC								
7,5/16	7,5/10	Blank/B-flange	200	150	100	OTR16A3B	1SCA022575R7410	1.7
Auxiliary contacts included: 1NO • Auxiliary contacts max: 2NO+2NC								
15/30	15/20	Blank/B-flange	200	150	100	OTR25A3B	1SCA022575R7590	1.9
22/45	15/20		200	150	100	OTR36A3B	1SCA022575R7670	1.9
30/63	30/35		200	150	100	OTR63A3B	1SCA022575R7750	2
55/125	75/125	Blank/2xø50.5+ø20.5	400	400	230	OT125GSUM3AZ	1SCA161472R1001	14.8

Compression glands or flanges to be ordered separately.

Ordering information

Stainless steel enclosed switch-disconnectors, 16...125 A



OTR16...63B3M



OTR100...125B3B



OTR100...125B3U

Enclosed switch-disconnectors, 3-pole, black handle, IP65

The delivery includes a black handle (I-O/ON-OFF), N- and PE-terminals. The handle has cover interlock and defeatable interlock function.

Cable entries from top and bottom

Max. motor output/ AC-23A			Dimensions					Weight
415V	690V	Cable	Height	Width	Depth			/unit
kW/A	kW/A	outlets/side	mm	mm	mm	Type	Order number	kg
Selector handle Auxiliary contacts included: none • Auxiliary contacts max: 2NC								
7.5 / 16	7.5 / 10	2xø25.5+ø16.5 / 2xø25.5+ø16.5	200	150	100	OTR16B3M	1SCA022567R9420	1.7
9 / 20	9 / 11		200	150	100	OTR25B3M	1SCA022567R9690	1.7
11 / 23	11 / 12		200	150	100	OTR32B3M	1SCA022567R9850	1.7
Selector handle Auxiliary contacts included: none • Auxiliary contacts max: 1NO+2NC								
22 / 45	15 / 20	2xø32.5+ø16.5 / 2xø32.5+ø16.5	200	150	100	OTR45B3M	1SCA022567R0010	1.9
37 / 75	18.5 / 20		200	150	100	OTR63B3M	1SCA022567R0270	1.9
Pistol handle Auxiliary contacts included: none • Auxiliary contacts max: 1NO+2NC								
37 / 80	37 / 40	B-flange / B-flange	300	200	135	OTR100B3B	1SCA022568R0510	3.4
37 / 80	37 / 40	Blank / Blank	300	200	135	OTR100B3U	1SCA022568R0600	3.4
45 / 90	45 / 50	B-flange / B-flange	300	200	135	OTR125B3B	1SCA022568R0780	3.4
45 / 90	45 / 50	Blank / Blank	300	200	135	OTR125B3U	1SCA022568R0860	3.4
Pistol handle Auxiliary contacts included: none • Auxiliary contacts max: 2NC								
7.5 / 16	7.5 / 10	Blank / Blank	300	200	135	OTR16B3U	1SCA127690R1001	1.7
Pistol handle Auxiliary contacts included: none • Auxiliary contacts max: 1NO+2NC								
22 / 45	15 / 20	Blank / Blank	300	200	135	OTR45B3U	1SCA127687R1001	1.9

Cable knock-outs as standard, compression glands have to be ordered separately.

Ordering information

Stainless steel enclosed switch-disconnectors, 16...125 A



OTR16...63B3M



OTR100...125BA3B



OTR100...125BA3U

Enclosed switch-disconnectors, 3-pole, red-yellow handle, IP65

The delivery includes a red-yellow handle (I-O/ON-OFF), N- and PE-terminals. The handle has cover interlock and defeatable interlock function.

Cable entries from top and bottom

Max. motor output/ AC-23A			Dimensions					Weight
415V	690V	Cable	Height	Width	Depth			/unit
kW/A	kW/A	outlets/side	mm	mm	mm	Type	Order number	kg
Selector handle Auxiliary contacts included: none • Auxiliary contacts max: 2NC								
7.5 / 16	7.5 / 10	2xø25.5+ø16.5 / 2xø25.5+ø16.5	200	150	100	OTR16BA3M	1SCA022569R5110	1.7
9 / 20	9 / 11		200	150	100	OTR25BA3M	1SCA022569R5540	1.7
11 / 23	11 / 12		200	150	100	OTR32BA3M	1SCA022569R5970	1.7
Selector handle Auxiliary contacts included: none • Auxiliary contacts max: 1NO+2NC								
22 / 45	15 / 20	2xø32.5+ø16.5 / 2xø32.5+ø16.5	200	150	100	OTR45BA3M	1SCA022569R6350	1.9
37 / 75	18.5 / 20		200	150	100	OTR63BA3M	1SCA022569R6780	1.9
Pistol handle Auxiliary contacts included: none • Auxiliary contacts max: 1NO+2NC								
37 / 80	37 / 40	B-flange / B-flange	300	200	135	OTR100BA3B	1SCA022569R7320	3.4
37 / 80	37 / 40	Blank / Blank	300	200	135	OTR100BA3U	1SCA022569R7590	3.4
45 / 90	45 / 50	B-flange / B-flange	300	200	135	OTR125BA3B	1SCA022569R7750	3.4
45 / 90	45 / 50	Blank / Blank	300	200	135	OTR125BA3U	1SCA022569R7910	3.4

Cable knock-outs as standard, flanges have to be ordered separately.

Ordering information

Stainless steel sheet enclosed switch-disconnectors, 16...125 A



OTR16T4M



OTR25...36T4M



OTR75..90T4B



OTR16..63T4B

Enclosed switch-disconnectors with auxiliary contact and 'Safety switch' -sticker, 4-pole, IP65, black handle

The delivery includes a black handle (I-O/ON-OFF), auxiliary contact 1NO and PE-terminal. Knock-out type Cable outlets included, cable outlets also for control cable. Cover interlock and defeatable interlock included. The products are EMC approved.

Cable entries from top and bottom

Max. motor output/ AC-23A			Enclosure dimensions					
415V	690V	Cable	Height	Width	Depth			Weight /unit
kW/A	kW/A	openings/side	mm	mm	mm	Type	Order number	kg
Selector handle								
Auxiliary contacts included: 1NO • Auxiliary contacts max: 2NO+2NC								
7,5/16	7,5/10	2xø25.5/2xø25.5	200	150	100	OTR16T4M	1SCA022613R4210	1.8
Auxiliary contacts included: 1NO • Auxiliary contacts max: 2NO+1NC								
15/30	15/20	2xø32.5+ø16.5/ 2xø32.5+ø16.5	200	150	100	OTR25T4M	1SCA022613R4300	2
22/45	15/20		200	150	100	OTR36T4M	1SCA022613R4480	2
Pistol handle								
Auxiliary contacts included: 1NO • Auxiliary contacts max: 2NO+2NC								
30/63	30/35	2xø32.5+ø16.5/ 2xø32.5+ø16.5	250	165	110	OTR63T4M	1SCA022613R4560	2.5
37/80	37/40	B-flange/B-flange	300	200	135	OTR75T4B	1SCA022567R1360	3.4
45/90	45/50		300	200	135	OTR90T4B	1SCA022567R1520	3.4

Cable entries from bottom

Max. motor output/ AC-23A			Enclosure dimensions					
415V	690V	Cable	Height	Width	Depth			Weight /unit
kW/A	kW/A	openings/side	mm	mm	mm	Type	Order number	kg
Selector handle								
Auxiliary contacts included: 1NO • Auxiliary contacts max: 2NO+2NC								
7,5/16	7,5/10	Blank/B-flange	200	150	100	OTR16T4B	1SCA022580R5740	1.8
Auxiliary contacts included: 1NO • Auxiliary contacts max: 2NO+1NC								
15/30	15/20	Blank/B-flange	200	150	100	OTR25T4B	1SCA022580R5910	2
22/45	15/20		200	150	100	OTR36T4B	1SCA022580R6040	2
Auxiliary contacts included: 1NO • Auxiliary contacts max: 1NO+1NC								
30/63	30/35	Blank/B-flange	200	150	100	OTR63T4B	1SCA022580R6120	2.1

Compression glands or flanges to be ordered separately.

Ordering information

Stainless steel sheet enclosed switch-disconnectors, 16...125 A



OTR16A4M



OTR25...36A4M



OTR63A4M



OT16...63A4B

Enclosed switch-disconnectors with auxiliary contact and 'Safety switch' -sticker, 4-pole, IP65, red-yellow handle

The delivery includes a red-yellow handle (I-O/ON-OFF), auxiliary contact 1NO and PE-terminal. Knock-out type Cable outlets included, cable outlets also for control cable. Cover interlock and defeatable interlock included. The products are EMC approved.

Cable entries from top and bottom

Max. motor output/ AC-23A			Enclosure dimensions					
415V	690V	Cable	Height	Width	Depth			Weight /unit
kW/A	kW/A	openings/side	mm	mm	mm	Type	Order number	kg
Selector handle								
Auxiliary contacts included: 1NO • Auxiliary contacts max: 2NO+2NC								
7,5/16	7,5/10	2xø25.5/2xø25.5	200	150	100	OTR16A4M	1SCA022613R3240	1.8
Auxiliary contacts included: 1NO • Auxiliary contacts max: 2NO+1NC								
15/30	15/20	2xø32.5+ø16.5/ 2xø32.5+ø16.5	200	150	100	OTR25A4M	1SCA022613R3320	2
22/45	15/20		200	150	100	OTR36A4M	1SCA022613R3410	2
Pistol handle								
Auxiliary contacts included: 1NO • Auxiliary contacts max: 2NO+2NC								
30/63	30/35	2xø32.5+ø16.5/ 2xø32.5+ø16.5	250	165	110	OTR63A4M	1SCA022613R3590	2.5
37/80	37/40	B-flange/B-flange	300	200	135	OTR75A4B	1SCA022567R9000	3.4
45/90	45/50		300	200	135	OTR90A4B	1SCA022567R9260	3.4

Cable entries from bottom

Max. motor output/ AC-23A			Enclosure dimensions					
415V	690V	Cable	Height	Width	Depth			Weight /unit
kW/A	kW/A	openings/side	mm	mm	mm	Type	Order number	kg
Selector handle								
Auxiliary contacts included: 1NO • Auxiliary contacts max: 2NO+2NC								
7,5/16	7,5/10	Blank/B-flange	200	150	100	OTR16A4B	1SCA022745R7780	1.8
Auxiliary contacts included: 1NO • Auxiliary contacts max: 2NO+1NC								
15/30	15/20	Blank/B-flange	200	150	100	OTR25A4B	1SCA022745R7860	2
22/45	15/20		200	150	100	OTR36A4B	1SCA022745R7940	2
Auxiliary contacts included: 1NO • Auxiliary contacts max: 1NO+1NC								
30/63	30/35	Blank/B-flange	200	150	100	OTR63A4B	1SCA022745R8080	2.1

Compression glands or flanges to be ordered separately.

Ordering information

Stainless steel enclosed switch-disconnectors, 16...125 A



OTR16...63B4M



OTR100...125B4B



OTR100...125B4U

Enclosed switch-disconnectors, 4-pole, black handle, IP65

The delivery includes a black handle (I-O/ON-OFF), N- and PE-terminals. The handle has cover interlock and defeatable interlock function. EMC approved.

Cable entries from top and bottom

Max. motor output/ AC-23A			Dimensions					Weight /unit
415V	690V	Cable	Height	Width	Depth			
kW/A	kW/A	outlets/side	mm	mm	mm	Type	Order number	kg
Selector handle								
Auxiliary contacts included: none • Auxiliary contacts max: 2NO+2NC								
7.5 / 16	7.5 / 10	2xø25.5+ø16.5 / 2xø25.5+ø16.5	200	150	100	OTR16B4M	1SCA022568R1080	1.7
9 / 20	9 / 11		200	150	100	OTR25B4M	1SCA022568R1240	1.7
11 / 23	11 / 12		200	150	100	OTR32B4M	1SCA022568R1410	1.7
Auxiliary contacts included: none • Auxiliary contacts max: 2NO+1NC								
22 / 45	15 / 20	2xø32.5+ø16.5 / 2xø32.5+ø16.5	200	150	100	OTR45B4M	1SCA022568R1670	1.9
37 / 75	18.5 / 20		200	150	100	OTR63B4M	1SCA022568R1830	1.9
Pistol handle								
Auxiliary contacts included: none • Auxiliary contacts max: 2NO+2NC								
37 / 80	37 / 40	B-flange / B-flange	300	200	135	OTR100B4B	1SCA022568R2130	3.4
37 / 80	37 / 40	Blank / Blank	300	200	135	OTR100B4U	1SCA022568R2210	3.4
45 / 90	45 / 50	B-flange / B-flange	300	200	135	OTR125B4B	1SCA022568R2300	3.4
45 / 90	45 / 50	Blank / Blank	300	200	135	OTR125B4U	1SCA022568R2480	3.4

Cable knock-outs as standard, compression glands have to be ordered separately.



OTR16...63B4M



OTR100...125BA4B



OTR100...125BA4U

Enclosed switch-disconnectors, 4-pole, red-yellow handle, IP65

The delivery includes a red-yellow handle (I-O/ON-OFF), N- and PE-terminals. The handle has cover interlock and defeatable interlock function.

Cable entries from top and bottom

Max. motor output/ AC-23A			Dimensions					Weight /unit
415V	690V	Cable	Height	Width	Depth			
kW/A	kW/A	outlets/side	mm	mm	mm	Type	Order number	kg
Selector handle								
Auxiliary contacts included: none • Auxiliary contacts max: 2NO+2NC								
7.5 / 16	7.5 / 10	2xø25.5+ø16.5 / 2xø25.5+ø16.5	200	150	100	OTR16BA4M	1SCA022569R5200	1.7
9 / 20	9 / 11		200	150	100	OTR25BA4M	1SCA022569R5620	1.7
11 / 23	11 / 12		200	150	100	OTR32BA4M	1SCA022569R6010	1.7
Auxiliary contacts included: none • Auxiliary contacts max: 2NO+1NC								
22 / 45	15 / 20	2xø32.5+ø16.5 / 2xø32.5+ø16.5	200	150	100	OTR45BA4M	1SCA022569R6430	1.9
37 / 75	18.5 / 20		200	150	100	OTR63BA4M	1SCA022569R6860	1.9
Pistol handle								
Auxiliary contacts included: none • Auxiliary contacts max: 2NO+2NC								
37 / 80	37 / 40	B-flange / B-flange	300	200	135	OTR100BA4B	1SCA022569R7410	3.4
37 / 80	37 / 40	Blank / Blank	300	200	135	OTR100BA4U	1SCA022569R7670	3.4
45 / 90	45 / 50	B-flange / B-flange	300	200	135	OTR125BA4B	1SCA022569R7830	3.4
45 / 90	45 / 50	Blank / Blank	300	200	135	OTR125BA4U	1SCA022569R8050	3.4

Cable knock-outs as standard, flanges have to be ordered separately.

Ordering information

Stainless steel sheet enclosed switch-disconnectors, 16...125 A



OTR16T6M



OTR16T6B



OTR25...36T6M



OTR25...36T6B



OTR75...90T6B

Enclosed switch-disconnectors with auxiliary contact and 'Safety switch' -sticker, 6-pole, IP65, black handle

The delivery includes a black handle (I-O/ON-OFF), auxiliary contact 1NO and PE-terminal. Knock-out type Cable outlets included, cable outlets also for control cable. Equipped with hings and lock. Cover interlock and defeatable interlock included. The products are EMC approved.

Cable entries from top and bottom

Max. motor output/ AC-23A			Enclosure dimensions					Weight
415V	690V	Cable	Height	Width	Depth			/unit
kW/A	kW/A	openings/side	mm	mm	mm	Type	Order number	kg
Selector handle								
Auxiliary contacts included: 1NO • Auxiliary contacts max: 2NO+2NC								
7,5/16	7,5/10	2xø25.5+ø16.5/ 2xø25.5+ø16.5	200	150	100	OTR16T6M	1SCA022613R4640	1.8

Cable entries from bottom

Max. motor output/ AC-23A			Enclosure dimensions					Weight
415V	690V	Cable	Height	Width	Depth			/unit
kW/A	kW/A	openings/side	mm	mm	mm	Type	Order number	kg
Selector handle								
Auxiliary contacts included: 1NO • Auxiliary contacts max: 2NO+2NC								
7,5/16	7,5/10	Blank/B-flange	200	150	100	OTR16T6B	1SCA022580R5820	1.8
Pistol handle								
Auxiliary contacts included: 1NO • Auxiliary contacts max: 1NO+1NC								
15/30	15/20	2xø32.5+ø16.5/ 2xø32.5+ø16.5	250	165	110	OTR25T6M	1SCA022613R4720	2.5
15/30	15/20	B-flange/B-flange	250	165	110	OTR25T6B	1SCA022580R8250	3.4
22/45	15/20	2xø32.5+ø16.5/ 2xø32.5+ø16.5	250	165	110	OTR36T6M	1SCA022613R4810	2.5
22/45	15/20	B-flange/B-flange	250	165	110	OTR36T6B	1SCA022580R8330	3.4
37/80	37/40		300	200	135	OTR75T6B	1SCA022580R9060	3.6
45/90	45/50		300	200	135	OTR90T6B	1SCA022580R9140	3.6

Compression glands or flanges to be ordered separately.

Ordering information

Stainless steel sheet enclosed switch-disconnectors, 16...125 A



OTR16A6M



OTR25...36A6M



OTR25...36A6B



OTR75...90A6B



OTR16A6B

Enclosed switch-disconnectors with auxiliary contact and 'Safety switch' -sticker, 6-pole, IP65, red-yellow handle

The delivery includes a red-yellow handle (I-O/ON-OFF), auxiliary contact 1NO and PE-terminal. Knock-out type Cable outlets included, cable outlets also for control cable. Equipped with hinges and lock. Cover interlock and defeatable interlock included. The products are EMC approved.

Cable entries from top and bottom

Max. motor output/ AC-23A			Enclosure dimensions					
415V	690V	Cable	Height	Width	Depth			Weight /unit
kW/A	kW/A	openings/side	mm	mm	mm	Type	Order number	kg
Selector handle								
Auxiliary contacts included: 1NO • Auxiliary contacts max: 2NO+2NC								
7,5/16	7,5/10	2xø25.5/2xø25.5	200	150	100	OTR16A6M	1SCA022613R3670	1.8
Pistol handle								
Auxiliary contacts included: 1NO • Auxiliary contacts max: 1NO+1NC								
15/30	15/20	2xø32.5+ø16.5/ 2xø32.5+ø16.5	250	165	110	OTR25A6M	1SCA022613R3750	2.5
15/30	15/20	B-flange/B-flange	250	165	110	OTR25A6B	1SCA022745R7510	3.4
22/45	15/20	2xø32.5+ø16.5/ 2xø32.5+ø16.5	250	165	110	OTR36A6M	1SCA022613R3830	2.5
22/45	15/20	B-flange/B-flange	250	165	110	OTR36A6B	1SCA022745R7600	3.4
Auxiliary contacts included: 1NO • Auxiliary contacts max: 1NO								
37/80	37/40	B-flange/B-flange	300	200	135	OTR75A6B	1SCA022596R7210	3.6
45/90	45/50	B-flange/B-flange	300	200	135	OTR90A6B	1SCA022596R7300	3.6

Cable entries from bottom

Max. motor output/ AC-23A			Enclosure dimensions					
415V	690V	Cable	Height	Width	Depth			Weight /unit
kW/A	kW/A	openings/side	mm	mm	mm	Type	Order number	kg
Selector handle								
Auxiliary contacts included: 1NO • Auxiliary contacts max: 2NO+2NC								
7,5/16	7,5/10	Blank/B-flange	200	150	100	OTR16A6B	1SCA022745R8160	1.8

Compression glands or flanges to be ordered separately.

Ordering information

Stainless steel enclosed switch-disconnectors, 16...125 A



OTR16...32B6M



OTR45...63B6B



OTR45...63B6U

Enclosed switch-disconnectors, 6-pole, black handle, IP65

The delivery includes a black handle (I-O/ON-OFF), N- and PE-terminals. The handle has cover interlock and defeatable interlock function.

Cable entries from top and bottom

Max. motor output/ AC-23A			Dimensions					Weight
415V	690V	Cable	Height	Width	Depth			/unit
kW/A	kW/A	outlets/side	mm	mm	mm	Type	Order number	kg
Selector handle Auxiliary contacts included: none • Auxiliary contacts max: 0NO+0NC								
7.5 / 16	7.5 / 10	2xø25.5+ø16.5 / 2xø25.5+ø16.5	200	150	100	OTR16B6M	1SCA022575R2440	1.8
9 / 20	9 / 11		200	150	100	OTR25B6M	1SCA022575R2870	1.8
11 / 23	11 / 12		200	150	100	OTR32B6M	1SCA022575R3250	1.8
Pistol handle Auxiliary contacts included: none • Auxiliary contacts max: 1NO+1NC								
22 / 45	15 / 20	B-flange / B-flange	300	200	135	OTR45B6B	1SCA022611R6660	3.5
22 / 45	15 / 20	Blank / Blank	300	200	135	OTR45B6U	1SCA022611R6820	3.5
37 / 75	18.5 / 20	B-flange / B-flange	300	200	135	OTR63B6B	1SCA022611R7120	3.5
37 / 75	18.5 / 20	Blank / Blank	300	200	135	OTR63B6U	1SCA022611R7210	3.5

Cable knock-outs as standard, compression glands have to be ordered separately.



OTR16...32BA6M



OTR45...63BA6B



OTR45...63BA6U

Enclosed switch-disconnectors, 6-pole, red-yellow handle, IP65

The delivery includes a red-yellow handle (I-O/ON-OFF), N- and PE-terminals. The handle has cover interlock and defeatable interlock function.

Cable entries from top and bottom

Max. motor output/ AC-23A			Dimensions					Weight
415V	690V	Cable	Height	Width	Depth			/unit
kW/A	kW/A	outlets/side	mm	mm	mm	Type	Order number	kg
Selector handle Auxiliary contacts included: none • Auxiliary contacts max: 0NO+0NC								
7.5 / 16	7.5 / 10	2xø25.5+ø16.5 / 2xø25.5+ø16.5	200	150	100	OTR16BA6M	1SCA022575R2610	1.8
9 / 20	9 / 11		200	150	100	OTR25BA6M	1SCA022575R3090	1.8
11 / 23	11 / 12		200	150	100	OTR32BA6M	1SCA022575R3410	1.8
Pistol handle Auxiliary contacts included: none • Auxiliary contacts max: 1NO+1NC								
22 / 45	15 / 20	B-flange / B-flange	300	200	135	OTR45BA6B	1SCA022611R6910	3.5
22 / 45	15 / 20	Blank / Blank	300	200	135	OTR45BA6U	1SCA022611R7040	3.5
37 / 75	18.5 / 20	B-flange / B-flange	300	200	135	OTR63BA6B	1SCA022611R7390	3.5
37 / 75	18.5 / 20	Blank / Blank	300	200	135	OTR63BA6U	1SCA022611R7470	3.5

Cable knock-outs as standard, compression glands and flanges have to be ordered separately.

Ordering Information

Aluminium enclosed switch-disconnectors, 16...125 A

Type keys

Aluminium enclosed switch-disconnectors, types LBAS_, KSE_ and KSF_

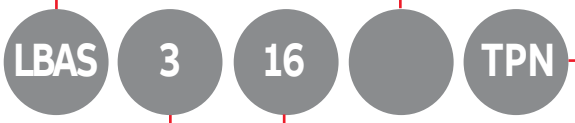

Main type	
Aluminium enclosed switch-disconnectors (without auxiliary contacts)	**KSE**
Aluminium enclosed switch-disconnectors with auxiliary contact and 'Safety switch' -sticker	**LBAS**
Fireman switch	**KSF**

Extras, otherwise not used	
EMC switch	**E/**

Poles	
2-pole	**2**
3-pole with neutral terminal	**3**
3-pole with switched neutral	**4**
6-pole	**6**

Rated Current
Ie AC-22A for enclosed switch-disconnector (without auxiliary contacts)
Ie AC-23A for enclosed switch-disconnector with auxiliary contact and 'Safety switch' sticker

Construction	
2-pole	**DP**
3-pole with neutral terminal	**TPN**
3-pole with switched neutral	**TPSN**

Aluminium enclosed switch-disconnectors, types OTA_

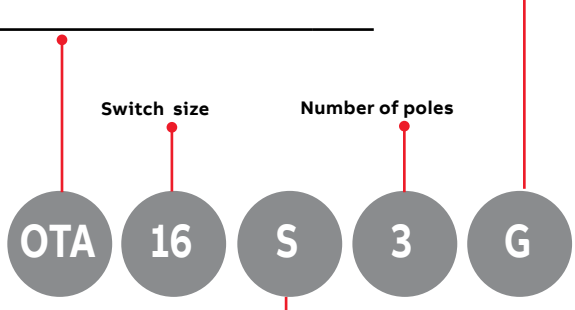

Main type	
Aluminium enclosed switch-disconnectors with auxiliary contact and 'Safety switch' -sticker	**OTA**

Handle colour, construction	
Black handle, cable entries from top and bottom	**G**
Red-yellow handle	**Y**
Black handle, cable entries from bottom	**B**

Handle type	
Selector handle	**S**
Pistol handle	**P**

Ordering information

Aluminium enclosed switch-disconnectors, 16...125 A



LBAS316, LBAS416



LBAS325, LBAS425

Side operated enclosed switch-disconnectors with auxiliary contact and 'Safety switch' -sticker, 3 and 4-pole, IP54

The delivery includes: enclosure in aluminium and handle in dark grey plastic, neutral and PE terminal, 1NO auxiliary contact, cable entries with metric threaded holes with membrane glands/sealing plugs IP54 (see table page 11). Padlockable handle with cover interlock function.

Cable entries from top and bottom

Max. motor output/ AC-23A			Enclosure dimensions					
415V	690V	Cable	Height	Width	Depth			Weight /unit
kW/A	kW/A	openings/side	mm	mm	mm	Type	Order number	kg
Dark grey side-operated handle, dark grey cover								
Auxiliary contacts included: 1NO • Auxiliary contacts max: 2NO								
3-pole								
7.5/16	7.5/10	2xM25/2xM25	130	111	60	LBAS316TPN	2CMA142430R1000	0.57
11/25	11/16	2xM32/2xM32+M16	168	138	68	LBAS325TPN	2CMA142432R1000	0.8
4-pole								
7.5/16	7.5/10	2xM25/2xM25	130	111	60	LBAS416TPSN	2CMA142431R1000	0.57
11/25	11/16	2xM32/2xM32+M16	168	138	68	LBAS425TPSN	2CMA142433R1000	0.81

Side operated enclosed switch-disconnectors with auxiliary contact and 'Safety switch' -sticker, 3-pole, EMC, IP54

The delivery includes a red handle (I-O/ON-OFF), PE-terminal, threaded cable entries, EMC glands and auxiliary contacts. Grey enclosure. Handle padlockable in OFF-position, with knock outs for ON-position. The cover is interlocked. One NO auxiliary contact and safety switch sticker included.

Cable entries from top and bottom

Max.motor output/AC-23A			Enclosure dimensions					
<415V	<690V	Cable	Height	Width	Depth			Weight /unit
kW/A	kW / A	openings/side	mm	mm	mm	Type	Order number	kg
3-pole								
7.5/16	7.5/10	2xM25/2xM25	130	111	60	LBAS316E/TPN	2CMA142449R1000	0.6
11/25	11/16	2xM32/2xM32+M16	168	138	68	LBAS325E/TPN	2CMA142450R1000	0.8

Compression glands or flanges to be ordered separately.

Ordering information

Aluminium enclosed switch-disconnectors, 16...125 A



KSE225DP,
KSE325TPN,
KSE425TPSN



KSE240DP,
KSE340TPN,
KSE440TPSN

Enclosed switch-disconnectors, 2-pole, grey, IP65

The delivery includes a Enclosure in aluminium alloy (Silumin) with metric threaded cable entries and handle in PBT plastic. The delivery includes PE terminal and membrane glands (IP54) . The handle includes cover interlock and defeatable interlock function. Light grey box with dark grey cover and operating handle.

Cable entries from top and bottom

Max. motor output/ AC-23A			Dimensions					Weight
415V	690V	Cable	Height	Width	Depth			/unit
kW/A	kW/A	outlets/side	mm	mm	mm	Type	Order number	kg
Auxiliary contacts included: none • Auxiliary contacts max: 1N0								
3.7 / 25*	-	2xM25 / 2xM25	130	111	60	KSE225DP	2CMA142411R1000	0.5
7.5 / 32*	-	2xM32 / 2xM32+M16	168	138	68	KSE240DP	2CMA142414R1000	0.8
Auxiliary contacts included: none • Auxiliary contacts max: 0								
9.2 / 63*	-	2xM40 / 2xM40+M16	230	160	118	KSE263DP	2CMA144587R1000	1.8

*) 220-240V

Enclosed switch-disconnectors, 3-pole, grey, IP65

The delivery includes a Enclosure in aluminium alloy (Silumin) with metric threaded cable entries and handle in PBT plastic. The delivery includes PE terminal and membrane glands (IP54) . The handle includes cover interlock and defeatable interlock function. Light grey box with dark grey cover and operating handle.

Cable entries from top and bottom

Max. motor output/ AC-23A			Dimensions					Weight
415V	690V	Cable	Height	Width	Depth			/unit
kW/A	kW/A	outlets/side	mm	mm	mm	Type	Order number	kg
Auxiliary contacts included: none • Auxiliary contacts max: 1								
7.5 / 16	7.5 / 10	2xM25 / 2xM25	130	111	60	KSE325TPN	2CMA142412R1000	0.6
11 / 25	11 / 16	2xM25 / 2xM25+M16	168	138	68	KSE340TPN	2CMA142415R1000	0.8

Enclosed switch-disconnectors, 4-pole, grey, IP65

The delivery includes a Enclosure in aluminium alloy (Silumin) with metric threaded cable entries and handle in PBT plastic. The delivery includes PE terminal and membrane glands (IP54) . The handle includes cover interlock and defeatable interlock function. Light grey box with dark grey cover and operating handle.

Cable entries from top and bottom

Max. motor output/ AC-23A			Dimensions					Weight
415V	690V	Cable	Height	Width	Depth			/unit
kW/A	kW/A	outlets/side	mm	mm	mm	Type	Order number	kg
Auxiliary contacts included: none • Auxiliary contacts max: 1								
7.5 / 16	7.5 / 10	2xM25 / 2xM25	130	111	60	KSE425TPSN	2CMA142413R1000	0.6
11 / 25	11 / 16	2xM32 / 2xM32+M16	168	138	68	KSE440TPSN	2CMA142416R1000	0.8

Ordering information

Aluminium enclosed switch-disconnectors, 16...125 A



KSF225DP,
KSF325TPN,
KSF325TPNNO,
KSF425TPSN



KSF340TPN,
KSF440TPSN

Fireman's switches, aluminium enclosed, side operated, IP65

The delivery includes red painted switch-disconnectors for use by firemen to disconnect in case of fire. Aluminium alloy (Silumin) with metric threaded cable entries and special operating handle with loop and interlocking mechanism.

Cable entries from top and bottom, 2-pole

Rated current			Dimensions					Weight
AC-22A	AC-23A	Cable	Height	Width	Depth			/unit
415V	415V	outlets/side	mm	mm	mm	Type	Order number	kg
Delivery includes PE terminal and membrane glands (IP54) / sealing plugs. Auxiliary contacts included: none • Auxiliary contacts max: 1NO								
25	16	2xM25 / 2xM25	130	111	60	KSF225DP	2CMA142435R1000	0.6

Cable entries from top and bottom, 3-pole

Rated current			Dimensions					Weight
AC-22A	AC-23A	Cable	Height	Width	Depth			/unit
415V	415V	outlets/side	mm	mm	mm	Type	Order number	kg
Delivery includes PE terminal and membrane glands (IP54) / sealing plugs. Auxiliary contacts included: none • Auxiliary contacts max: 1NO								
25	16	2xM25 / 2xM25	130	111	60	KSF325TPN	2CMA142436R1000	0.6
25	16		130	111	60	KSF325TPNNO[1)]	2CMA142442R1000	0.6
40	32	2xM32 / 2xM32+M16	168	136	168	KSF340TPN	2CMA142438R1000	0.8

[1)]The KSF325TPNNO includes a 1NO auxiliary contact.

Cable entries from top and bottom, 4 -pole

Rated current			Dimensions					Weight
AC-22A	AC-23A	Cable	Height	Width	Depth			/unit
415V	415V	outlets/side	mm	mm	mm	Type	Order number	kg
Delivery includes PE terminal and membrane glands (IP54) / sealing plugs. For IP65 degree of protection compression glands must be used. Auxiliary contacts included: none • Auxiliary contacts max: 1NO								
25	16	2xM25 / 2xM25	130	111	60	KSF425TPSN	2CMA142437R1000	0.6
40	32	2xM32 / 2xM32+M16	168	136	168	KSF440TPSN	2CMA142439R1000	0.8

Ordering information

Aluminium enclosed switch-disconnectors, 16...125 A



OTA16...63S3G



OTA16...63S3Y



LBAS345...390TPN

Front operated enclosed switch-disconnectors with auxiliary contact and 'Safety switch' -sticker, 3-pole, IP65

The delivery includes a selector handle and PE terminal. 1NO auxiliary contact, cable entries with metric threaded holes with three compression type glands (IP65). Padlockable handle with cover interlock function. Cover interlock included. OTA_ products are EMC compatible when EMC cable glands are used.

Cable entries from top and bottom

Max. motor output/ AC-23A			Enclosure dimensions					
415V	690V	Cable	Height	Width	Depth			Weight /unit
kW/A	kW/A	openings/side	mm	mm	mm	Type	Order number	kg
Grey enclosure, black selector handle								
Auxiliary contacts included: 1NO • Auxiliary contacts max: 2NO+2NC								
7,5/16	7,5/10	2xM25+M20	165	130	103	OTA16S3G	1SCA142663R1001	1.25
15/30	15/20		165	130	103	OTA25S3G	1SCA142671R1001	1.45
22/45	15/20	2xM32+M20	165	130	103	OTA40S3G	1SCA142675R1001	1.45
30/63	18.5/20		165	130	103	OTA63S3G	1SCA142679R1001	1.45
Yellow enclosure, red selector handle								
Auxiliary contacts included: 1NO • Auxiliary contacts max: 2NO+2NC								
7,5/16	7,5/10	2xM25+M20	165	130	103	OTA16S3Y	1SCA142664R1001	1.25
15/30	15/20		165	130	103	OTA25S3Y	1SCA142672R1001	1.45
22/45	15/20	2xM32+M20	165	130	103	OTA40S3Y	1SCA142676R1001	1.45
30/63	18.5/20		165	130	103	OTA63S3Y	1SCA142680R1001	1.45
Black selector handle, padlockable handle with cover interlock function								
Auxiliary contacts included: 1NO • Auxiliary contacts max: 2NO+2NC Membrane type cable gland (IP54) and fixed neutral included.								
25/63	15/20		230	160	118	LBAS345TPN	2CMA142627R1000	1.75
37/75	18.5/20	2xM40/2xM40+M16	230	160	118	LBAS375TPN	2CMA142628R1000	1.75
45/90	45/50		230	160	118	LBAS390TPN	2CMA142629R1000	1.75

Compression glands or flanges to be ordered separately.

Ordering information

Aluminium enclosed switch-disconnectors, 16...125 A



OKA16S3G



OKA25...63S3G



KSE363TPN,
KSE380TPN,
KSE3100TPN,
KSE3125TPN



KSE363D/TPN

Enclosed switch-disconnectors, 3-pole, grey, IP65

The delivery includes a Enclosure in Aluminium alloy (Silumin) with metric threaded cable entries. Light grey box with dark grey cover. Delivery includes PE+neutral terminal and compression glands. Interlocked cover. Handle includes interlock function.
OKA_ types are EMC compatible when using EMC cable glands.

Cable entries from top and bottom

Max. motor output/ AC-23A			Dimensions					Weight
415V	690V	Cable	Height	Width	Depth			/unit
kW/A	kW/A	outlets/side	mm	mm	mm	Type	Order number	kg
Auxiliary contacts included: none • Auxiliary contacts max: 2NO+2NC								
7.5 / 16	7.5 / 10	2xM25+M20 / 2xM25+M20	165	130	103	OKA16S3G	1SCA142683R1001	1.3
11 / 20	11 / 11	2xM32+M20 / 2xM32+M20	165	130	103	OKA25S3G	1SCA142685R1001	1.3
11 / 23	11 / 12		165	130	103	OKA40S3G	1SCA142687R1001	1.3
22 / 63	15 / 20		165	130	103	OKA63S3G	1SCA142689R1001	1.5
Membrane type of glands (IP54) includes								
Auxiliary contacts included: none • Auxiliary contacts max: 1NO+1NC								
22 / 45	15 / 20	2xM40 / 2xM40+M16	230	160	145	KSE363TPN	2CMA144580R1000	1.8
37 / 75	18.5 / 20		230	160	118	KSE380TPN	2CMA144583R1000	1.8
Membrane type of glands (IP54) includes								
Auxiliary contacts included: none • Auxiliary contacts max: none								
22 / 45	15 / 20	Blank / 2xM40+M16	230	160	118	KSE363D/TPN	2CMA144581R1000	1.8
45 / 80	45 / 40	2xM40 / 2xM40+M16	230	160	118	KSE3100TPN	2CMA144585R1000	1.8
45 / 90	45 / 50		230	160	118	KSE3125TPN	2CMA144588R1000	1.8

Ordering information

Aluminium enclosed switch-disconnectors, 16...125 A



OTA125P3B



OTA125P3Y

Front operated enclosed switch-disconnectors with auxiliary contact and 'Safety switch' -sticker, 3-pole, IP65

Safety switch including N- and PE-terminals. Two cable glands included. Padlockable black color pistol type handle with interlock and defeatable interlocking function. 1NO and 1NC auxiliary contacts included. These products are EMC compatible with existing cable glands.

Cable entries from bottom

Max. motor output/ AC-23A			Enclosure dimensions					
415V	690V	Cable	Height	Width	Depth			Weight /unit
kW/A	kW/A	openings/side	mm	mm	mm	Type	Order number	kg
Black pistol handle, grey enclosure								
Auxiliary contacts included: 1NO+1NC • Auxiliary contacts max: 2NO+2NC								
55/125	55/70	2x24...48+2xM20	586	425	196	OTA125P3B	1SCA142583R1001	20.2
Red-yellow pistol handle, grey enclosure								
Auxiliary contacts included: 1NO+1NC • Auxiliary contacts max: 2NO+2NC								
55/125	70/70	2x24...48+2xM20	586	425	196	OTA125P3Y	1SCA142584R1001	20.2

Compression glands or flanges to be ordered separately.

Ordering information

Aluminium enclosed switch-disconnectors, 16...125 A



OTA16...63S4G



LBAS445...490TPSN



OTA16...63S4Y

Front operated enclosed switch-disconnectors with auxiliary contact and 'Safety switch' -sticker, 4-pole, IP65

The delivery includes: Selector handle and PE terminal. 1NO auxiliary contact, cable entries with metric threaded holes with three compression type glands (IP65). Padlockable handle with cover interlock function.

Cable entries from top and bottom

Max. motor output/ AC-23A			Enclosure dimensions					
415V	690V	Cable	Height	Width	Depth			Weight /unit
kW/A	kW/A	openings/side	mm	mm	mm	Type	Order number	kg
Black selector handle, grey enclosure								
Auxiliary contacts included: 1NO • Auxiliary contacts max: 2NO+2NC								
7.5/16	7.5/10	2xM25+M20	165	130	103	OTA16S4G	1SCA142666R1001	1.25
15/30	15/20		165	130	103	OTA25S4G	1SCA142673R1001	1.45
22/45	15/20	2xM32+M20	165	130	103	OTA40S4G	1SCA142677R1001	1.45
30/63	18.5/20		165	130	103	OTA63S4G	1SCA142681R1001	1.45
Auxiliary contacts included: 1NO • Auxiliary contacts max: 2NO+2NC Membrane type cable gland (IP54) .								
25/63	15/20		230	160	118	LBAS445TPSN	2CMA142630R1000	1
37/75	18.5/20	2xM40/2xM40+M16	230	160	118	LBAS475TPSN	2CMA142631R1000	1.75
45/90	45/50		230	160	118	LBAS490TPSN	2CMA142632R1000	1.75
Red selector handle, yellow enclosure								
Auxiliary contacts included: 1NO • Auxiliary contacts max: 2NO+2NC								
7.5/16	7.5/10	2xM25+M20	165	130	103	OTA16S4Y	1SCA142670R1001	1.25
15/30	15/20		165	130	103	OTA25S4Y	1SCA142674R1001	1.45
22/45	15/20	2xM32+M20	165	130	103	OTA40S4Y	1SCA142678R1001	1.45
30/63	18.5/20		165	130	103	OTA63S4Y	1SCA142682R1001	1.45

Ordering information

Aluminium enclosed switch-disconnectors, 16...125 A



OKA16S4G



OKA25...63S4G



KSE463...480TPSN

4-pole front operated switch-disconnectors, IP65

The delivery includes a Enclosure in Aluminium alloy (Silumin) with metric threaded cable entries. Light grey box with dark grey cover. Delivery includes PE+neutral terminal and compression glands. Interlocked cover. OKA_ types are EMC compatible when using EMC cable glands.

Cable entries from top and bottom

Max. motor output/ AC-23A			Dimensions					
415V	690V	Cable	Height	Width	Depth			Weight /unit
kW/A	kW/A	outlets/side	mm	mm	mm	Type	Order number	kg
Auxiliary contacts included: none • Auxiliary contacts max: 2NO+2NC								
7.5 / 16	7.5 / 10	2xM25+M20 / 2xM25+M20	165	130	103	OKA16S4G	1SCA142684R1001	1.3
11 / 20	11 / 11	2xM32+M20 / 2xM32+M20	165	130	103	OKA25S4G	1SCA142686R1001	1.3
11 / 23	11 / 12		165	130	103	OKA40S4G	1SCA142688R1001	1.3
22 / 63	15 / 20		165	130	103	OKA63S4G	1SCA142690R1001	1.5
Membrane type of glands (IP54) includes. Auxiliary contacts included: none • Auxiliary contacts max: none								
22 / 45	15 / 20	2xM40 / 2xM40+M16	230	160	118	KSE463TPSN	2CMA144582R1000	1.8
37 / 75	18.5 / 20		230	160	118	KSE480TPSN	2CMA144584R1000	1.8

Ordering Information

ATEX enclosed switch-disconnectors, 16...125 A

Type keys

ATEX enclosed switch-disconnectors, types OTA_ and OKA_

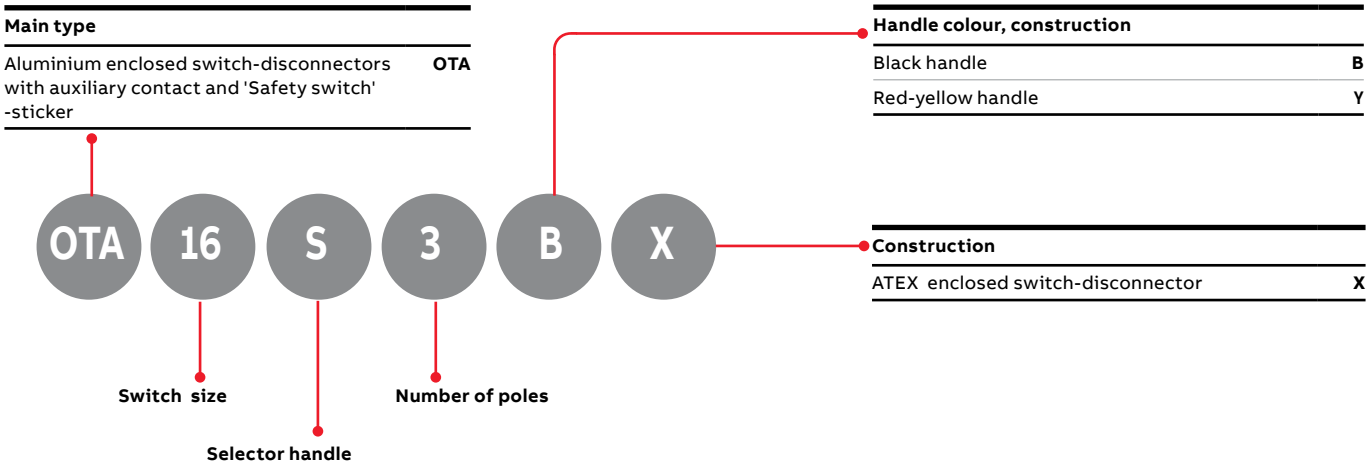

Ordering information

ATEX enclosed switch-disconnectors, 16...125 A



OTA16...40S3BX
OTA16...40S4BX



OTA63...125S3BX
OTA63...125S4BX
OT16...40S6BX

ATEX enclosed switch-disconnectors with auxiliary contact and 'Safety switch' -sticker, 3, 4 and 6-pole, IP65, black handle

The delivery includes a black handle (I-O/ON-OFF), PE-terminal, threaded cable entries, cable glands for two cables and one control cable, cable entry plugs, and auxiliary contacts according to the table below. Enclosure in rigid dye casted aluminium. Safety switch sticker included.

The products are all EMC approved. EMC glands to be ordered separately.

Cable entries from top and bottom

Max. motor output AC-23A			Dimensions					Weight
415V	690V	Cable	Height	Width	Depth			/unit
kW/A	kW/A	outlets/side	mm	mm	mm	Type	Order code	kg
3-pole								
Auxiliary contacts included: 1NO0NC. Auxiliary contacts max: 2NO2NC.								
7.5/16	7.5/10	2xM25+M20 / 2xM25+M20	165	130	103	OTA16S3BX	1SCA152716R1001	1.3
9/20	9/11		165	130	103	OTA25S3BX	1SCA152722R1001	1.3
11/23	11/12	2xM32+M20 / 2xM32+M20	165	130	103	OTA40S3BX	1SCA152728R1001	1.3
22/63	15/20	2xM40 / 2xM40+M16	230	160	118	OTA63S3BX	1SCA152734R1001	1.8
37/75	18.5/20		230	160	118	OTA80S3BX	1SCA152738R1001	1.8
37/75	37/40		230	160	118	OTA100S3BX	1SCA152697R1001	1.8
45/90	45/50		230	160	118	OTA125S3BX	1SCA152712R1001	1.8
4-pole								
Auxiliary contacts included: 1NO0NC. Auxiliary contacts max: 2NO2NC.								
7.5/16	7.5/10	2xM25+M20 / 2xM25+M20	165	130	103	OTA16S4BX	1SCA152718R1001	1.3
9/20	9/11		165	130	103	OTA25S4BX	1SCA152724R1001	1.3
11/23	11/12	2xM32+M20 / 2xM32+M20	165	130	103	OTA40S4BX	1SCA152730R1001	1.3
22/63	15/20	2xM40 / 2xM40+M16	230	160	118	OTA63S4BX	1SCA152736R1001	1.8
37/75	18.5/20		230	160	118	OTA80S4BX	1SCA152740R1001	1.8
37/80	37/40		230	160	118	OTA100S4BX	1SCA152710R1001	1.8
45/90	45/50		230	160	118	OTA125S4BX	1SCA152714R1001	1.8
6-pole								
Auxiliary contacts included: 1NO0NC. Auxiliary contacts max: 2NO2NC. Contains glands for 4 cables, and one control wire.								
7.5/16	7.5/10	2xM25 / 2xM25+M16	230	160	118	OTA16S6BX	1SCA152720R1001	1.8
9/20	9/11		230	160	118	OTA25S6BX	1SCA152726R1001	1.8
11/23	11/12	2xM32 / 2xM32+M16	230	160	118	OTA40S6BX	1SCA152732R1001	1.8

Ordering information

ATEX enclosed switch-disconnectors, 16...125 A



OTA16...40S3YX
OTA16...40S4YX



OTA63...100S3YX
OTA63...100S4YX
OTA16...40S6YX

ATEX enclosed switch-disconnectors with auxiliary contact and 'Safety switch' -sticker, 3, 4 and 6-pole, IP65, red-yellow handle

The delivery includes a red-yellow handle (I-O/ON-OFF), PE-terminal, threaded cable entries, cable glands for two cables and one control cable, cable entry plugs, and auxiliary contacts according to the table below. Enclosure in rigid dye casted aluminium. Safety switch sticker included.

The products are all EMC approved. EMC glands to be ordered separately.

Cable entries from top and bottom

Max. motor output AC-23A			Dimensions					Weight
415V	690V	Cable	Height	Width	Depth			/unit
kW/A	kW/A	outlets/side	mm	mm	mm	Type	Order code	kg
3-pole								
Auxiliary contacts included: 1NO0NC. Auxiliary contacts max: 2NO2NC.								
7.5/16	7.5/10	2xM25+M20 / 2xM25+M20	165	130	103	OTA16S3YX	1SCA152717R1001	1.3
9/20	9/11		165	130	103	OTA25S3YX	1SCA152723R1001	1.3
11/23	11/12		165	130	103	OTA40S3YX	1SCA152729R1001	1.3
22/63	15/20	2xM40 / 2xM40+M16	230	160	118	OTA63S3YX	1SCA152735R1001	1.8
37/75	18.5/20		230	160	118	OTA80S3YX	1SCA152739R1001	1.8
37/80	37/40		230	160	118	OTA100S3YX	1SCA152709R1001	1.8
45/90	45/50		230	160	118	OTA125S3YX	1SCA152713R1001	1.8
4-pole								
Auxiliary contacts included: 1NO0NC. Auxiliary contacts max: 2NO2NC.								
7.5/16	7.5/10	2xM25+M20 / 2xM25+M20	165	130	103	OTA16S4YX	1SCA152719R1001	1.3
9/20	9/11		165	130	103	OTA25S4YX	1SCA152725R1001	1.3
11/23	11/12	2xM32+M20 / 2xM32+M20	165	130	103	OTA40S4YX	1SCA152731R1001	1.3
22/63	15/20	2xM40 / 2xM40+M16	230	160	118	OTA63S4YX	1SCA152737R1001	1.8
37/75	18.5/20		230	160	118	OTA80S4YX	1SCA152741R1001	1.8
37/80	37/40		230	160	118	OTA100S4YX	1SCA152711R1001	1.8
45/90	45/50		230	160	118	OTA125S4YX	1SCA152715R1001	1.8
6-pole								
Auxiliary contacts included: 1NO0NC. Auxiliary contacts max: 2NO2NC. Contains glands for 4 cables, and one control wire.								
7.5/16	7.5/10	2xM25 / 2xM25+M16	230	160	118	OTA16S6YX	1SCA152721R1001	1.8
9/20	9/11		230	160	118	OTA25S6YX	1SCA152727R1001	1.8
11/23	11/12		230	160	118	OTA40S6YX	1SCA152733R1001	1.8

Dimension drawings

Plastic enclosed switch-disconnectors, 16...125 A

ONE20

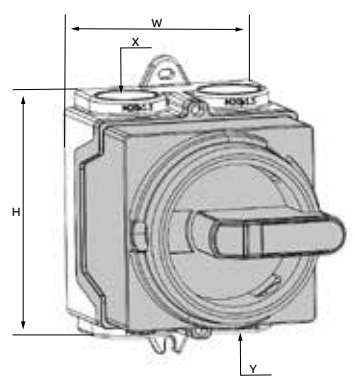

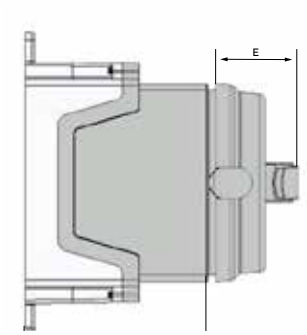

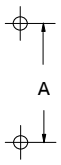

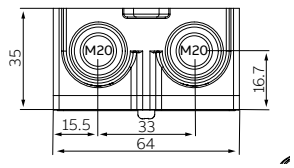

Type	Cable outlet
ONE20	2xM20

Size						Cable entry	Fixing dimensions
H	W	D	E	X	Y	A
76.5	64	56	25.4	2xM20	2xM20	82.5

OTP16H_

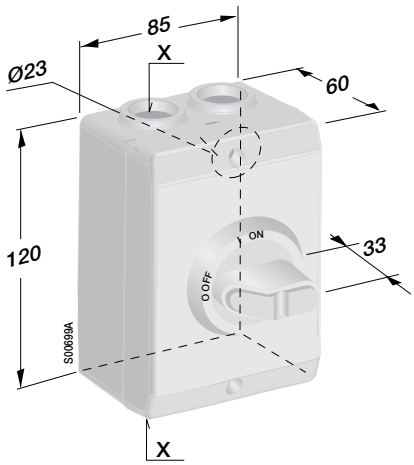

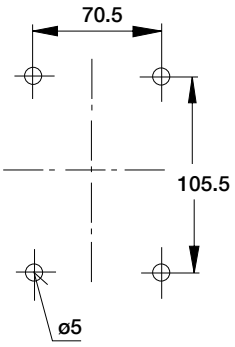

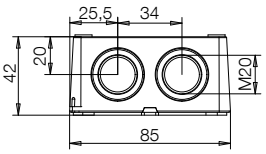

Type
OTP16H3M

Type	X
OTP16H3M	2 x M20
OTP16H3M25_	2 x M25

Dimension drawings

Plastic enclosed switch-disconnectors, 16...125 A

Side operated switch-disconnectors

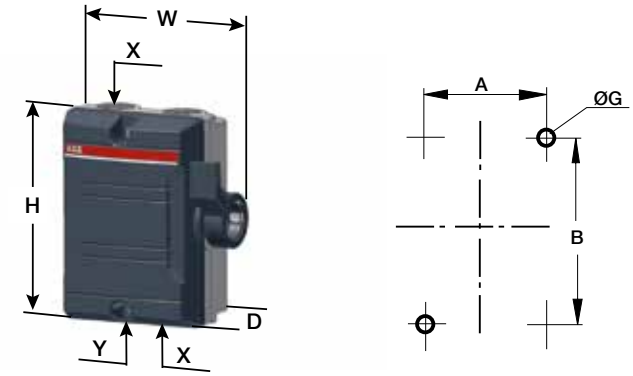

BWS616..625, BW 625...640

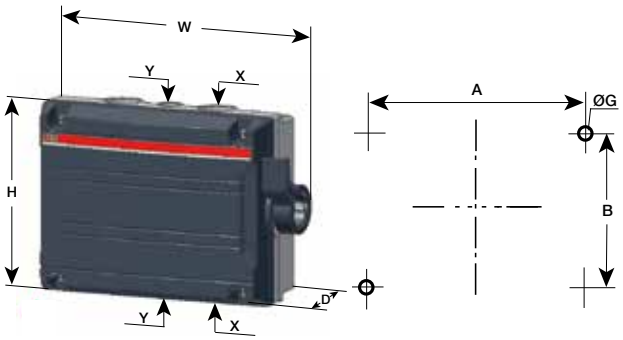

BWS316..425, BW 225....425, BW 240..440

Side operated switch-disconnectors

	Size			Cable entry		Fixing dimensions		
Type	H	W	D	X	Y	A	B	G
2-pole, plastic enclosed switch-disconnectors								
BW 225 DP	130	111	60	2xM25	-	64	90	5
BW 225 W DP	130	111	60	2xM25	-	64	90	5
BW 240 DP	168	138	68	2xM32	1xM16	90	127	5
3-pole, plastic enclosed switch-disconnectors								
BWS316_	130	111	60	2xM25	-	64	90	5
BWS325_	168	138	68	2xM32	1xM16	90	127	5
BW 325 W TPN	130	111	60	2xM25	-	64	90	5
BW 325 TPN	130	111	60	2xM25	-	64	90	5
BW 325 Y TPN	130	111	60	2xM25	-	64	90	5
BW 325 L TPN	130	111	62	2xM25	-	64	90	5
BW 325 K TPN	130	111	62	2xM25	-	64	90	5
BW 340 TPN	168	138	68	2xM32	1xM16	90	127	5
4-pole, plastic enclosed switch-disconnectors								
BWS416_	130	111	60	2xM25	-	64	90	5
BWS425_	168	138	68	2xM32	1xM16	90	127	5
BW 425 TPSN	130	111	60	2xM25	-	64	90	5
BW 440 TPSN	168	138	68	2xM32	1xM16	90	127	5
6-pole, plastic enclosed switch-disconnectors								
BWS616_	130	190	65	2xØ25	Ø16	124	90	5
BWS625_	130	190	65	2xØ25	Ø16	124	90	5
BW 625 TPN	130	190	65	2xø25	ø16	124	90	5
BW 640 TPN	130	190	65	2xø25	ø16	124	90	5

OTP16K3M1, OTP16K3M, OTP16HB3M_, OTP16B3M_

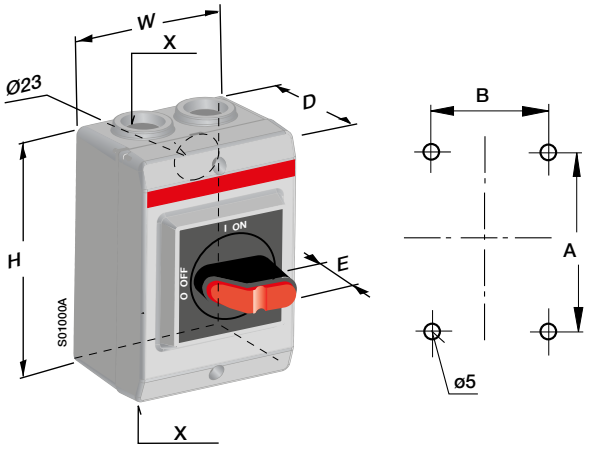

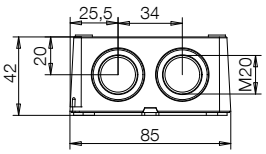

OTP16K3M_, OTP16HB3M, OTP16B3M

Front operated switch-disconnectors

			Size		Cable entry	Fixing dimensions	
Type	H	W	D	E	X	A	B
3- and 4-pole							
OTP16K3M_	120	85	60	33	2xM20	105.5	70.5
OTP16HB3M	120	85	60	33	2xM20	105.5	70.5
OTP16B3M	120	85	60	33	2xM20	105.5	70.5
OTP16_3M25	120	85	60	33	2xM25	105.5	70.5
OTP16_3U	120	85	60	33	-	105.5	70.5

Dimension drawings

Plastic enclosed switch-disconnectors

Enclosed switch-disconnectors with auxiliary contact and 'Safety switch' -sticker OTP/OTE16...90_

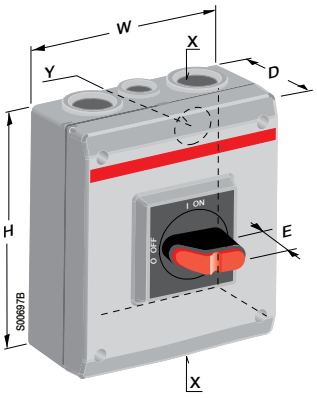

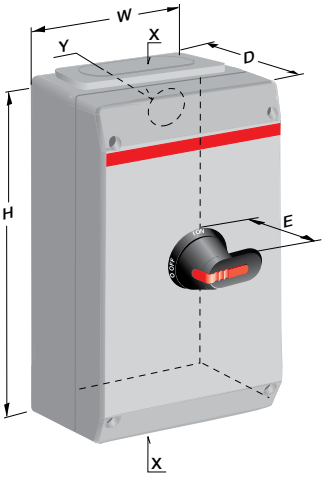

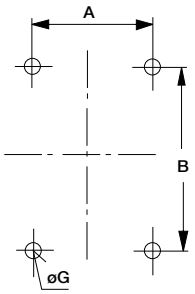

Type	H	W	D	E	B	A	ØG	X	Y
3- and 4-pole									
OTP16_3M, _4M	150	130	85	33	115	136	5	2xM25+M16	2x (ø29+ø19)
OTE16_3M, _4M	150	130	85	33	115	136	5	2xM25+M16	2x (ø29+ø19)
OTP/OTE25_3M, _4M	200	145	90	33	129.5	182.5	5	2xM32+M16	2x (ø38+ø19)
OTP/OTE36_3M, _4M	200	145	90	33	129.5	182.5	5	2xM32+M16	2x (ø38+ø19)
OTP63_3M	200	145	90	33	129.5	182.5	5	2xM32+M16	2x (ø38+ø19)
OTP/OTE75_3M, _4M	400	200	140	33	176	376	6	2xM50+M16	2x (ø38+ø19)
OTP/OTE75_3B, _4B	400	200	140	33	176	376	6	I -flange	-
OTP/OTE75_3U, _4U	400	200	140	33	176	376	6	-	-
OTP/OTE90_3M, _4M	400	200	140	33	176	376	6	2xM50+M16	2x (ø38+ø19)
OTP/OTE90_3B, _4B	400	200	140	33	176	376	6	I -flange	-
OTP/OTE90_3U, _4U	400	200	140	33	176	376	6	-	-
6-pole									
OTP16_6M	150	130	85	33	115	136	5	2xM25+M16	2x (ø29+ø19)
OTP25_6M	200	145	90	45	129.5	182.5	5	2xM32+M16	2x (ø38+ø19)
OTE25_6B	400	200	140	45	176	376	6	I -flange	-
OTP36_6M	200	145	90	45	129.5	182.5	5	2xM32+M16	2x (ø38+ø19)
OTE36_6B	400	200	140	45	176	376	6	I -flange	-
OTP63_6B	400	200	140	45	176	376	6	I -flange	-
OTP/OTE75_6M	400	200	140	45	176	376	6	2xM50+M16	2x (ø38+ø19)
OTP75_6B	400	200	140	45	176	376	6	I -flange	-
OTP75_6U	400	200	140	45	176	376	6	-	-
OTP/OTE90_6M	400	200	140	45	176	376	6	2xM50+M16	2x (ø38+ø19)
OTP90_6B	400	200	140	45	176	376	6	I -flange	-
OTP90_6U	400	200	140	45	176	376	6	-	-

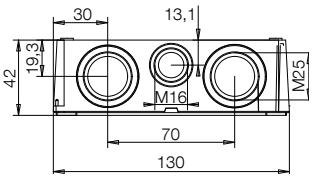

Type	X
OTP16_3M, _4M	2xM25+M16
OTE16_3M, _4M	2xM25+M16
OTP16_6M	2xM25+M16

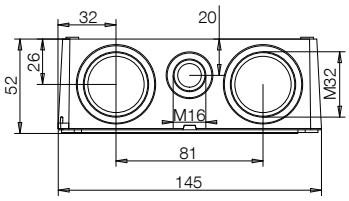

Type	X
OTP/OTE25_3M, _4M	2xM32+M16
OTP25_6M	2xM32+M16
OTP/OTE36_3M, _4M	2xM32+M16
OTP36_6M	2xM32+M16
OTP63_3M	2xM32+M16

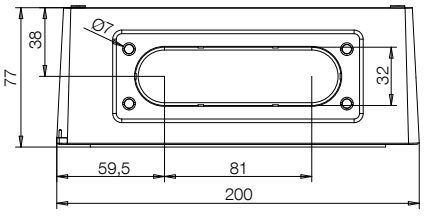

Type	X
OTP/OTE75_3B, _4B	I -flange
OTP/OTE75_6B	I -flange
OTP/OTE90_3B, _4B	I -flange
OTP90_6B	I -flange
OTE25_6B	I -flange
OTE36_6B	I -flange

Dimension drawings

Plastic enclosed switch-disconnectors

Enclosed switch-disconnectors OTP16...125

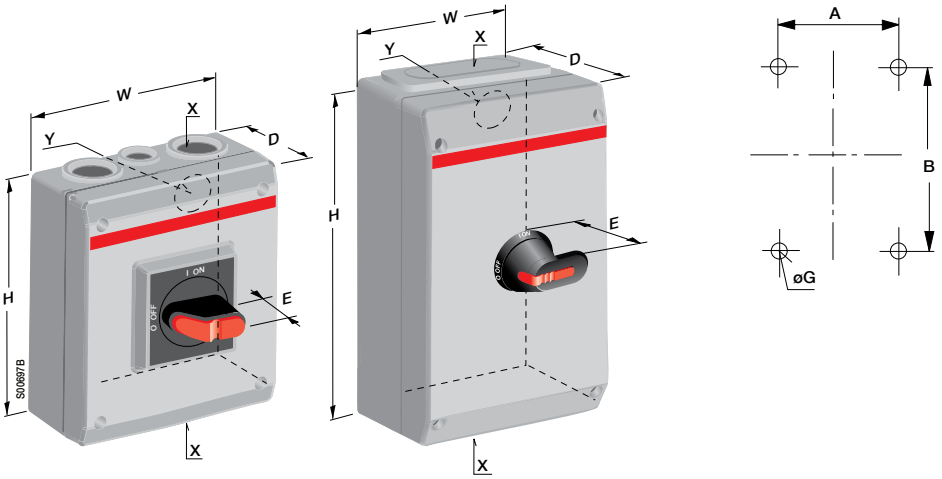

Front operated switch-disconnectors

			Size			Cable entry		Fixing dimensions	
Type	H	W	D	E	X	Y	A	B	C
3-pole									
OTP 25...32_ 3M	150	130	85	33	2xM25+M16	2Xø29+ø19	115	136	5
OTP 45...63_3M	200	145	90	33	2xM32+M16	2Xø38+ø19	129.5	182.5	5
OTP80...125_3B	400	200	140	33	I-flange	Blank	176	376	6
OTP80...125_3U	400	200	140	33	Blank	Blank	176	376	6
OTP100...125_3M	400	200	140	33	2xM50+M16	Blank	176	376	6
4-pole									
OTP 16...32_4M	150	130	85	33	2xM25+M16	2Xø29+ø19	115	136	5
OTP 45...63_4M	200	145	90	33	2xM32+M16	2Xø38+ø19	129.5	182.5	5
OTP80...125_4B	400	200	140	33	I-flange	Blank	176	376	6
OTP80...125_4U	400	200	140	33	Blank	Blank	176	376	6
OTP100...125_4M	400	200	140	33	2xM50+M16	Blank	176	376	6
6-pole									
OTP 16...32_ 6M	150	130	85	33	2xM25+M16	2Xø29+ø19	115	136	5
OTP 45...63_6M	200	145	90	45	2xM32+M16	2Xø38+ø19	129.5	182.5	5
OTP80...125_6B	400	200	140	45	I-flange	Blank	176	376	6
OTP80...125_6U	400	200	140	45	Blank	Blank	176	376	6
OTP125_6M	400	200	140	45	2xM50+M16	Blank	176	376	6

Dimension drawings

Plastic enclosed switch-disconnectors

Cable entry for OTP_ and OTE-type enclosures

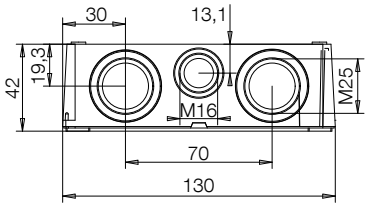

Type	Cable outlet
OTP25...32_3M	2xM25+M16
OTP16...32_4M, 6M	2xM25+M16

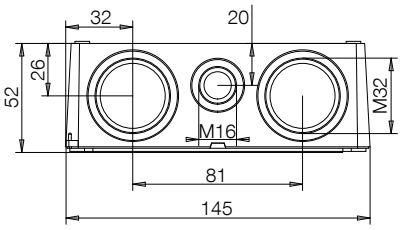

Type	Cable outlet
OTP45...63_3M, 4M, 6M	2xM32+M16

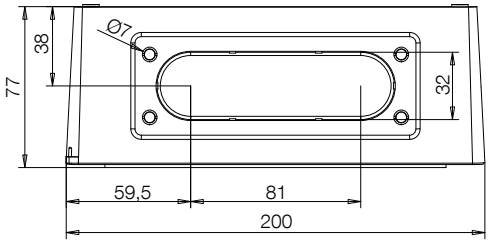

Type	Cable outlet
OTP80...125_3B, 4B, 6B	I -flange

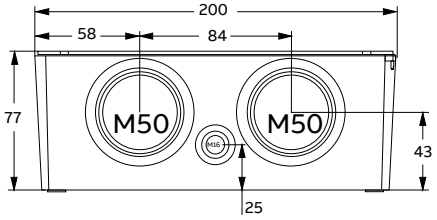

Type	Cable outlet
OTE/P75...125_3M, 4M, 6M	2xM50+M16

Dimension drawings

Plastic enclosed switch-disconnectors

OTU100-125_

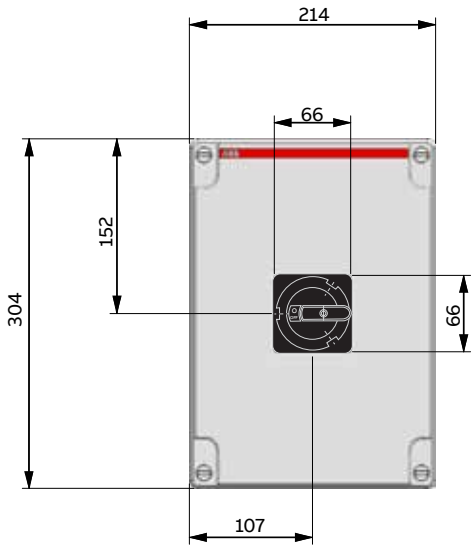

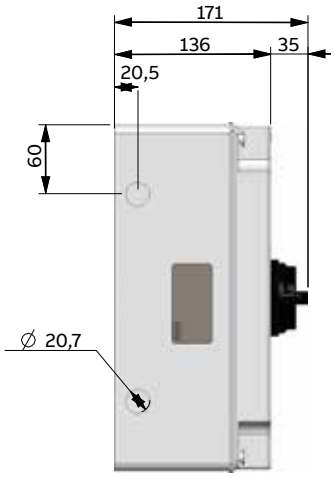

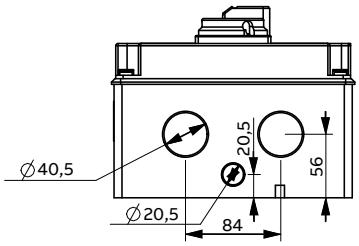

Type	Cable outlet
OTU100-125_	2x40.5+20.5

	Cable outlets		
Type	Top	Bottom	Fixing dimensions
OTU100-125_	2x40.5+20.5	2x40.5+20.5	239x187

Dimension drawings

Plastic enclosed switch-disconnectors

OT90...125_

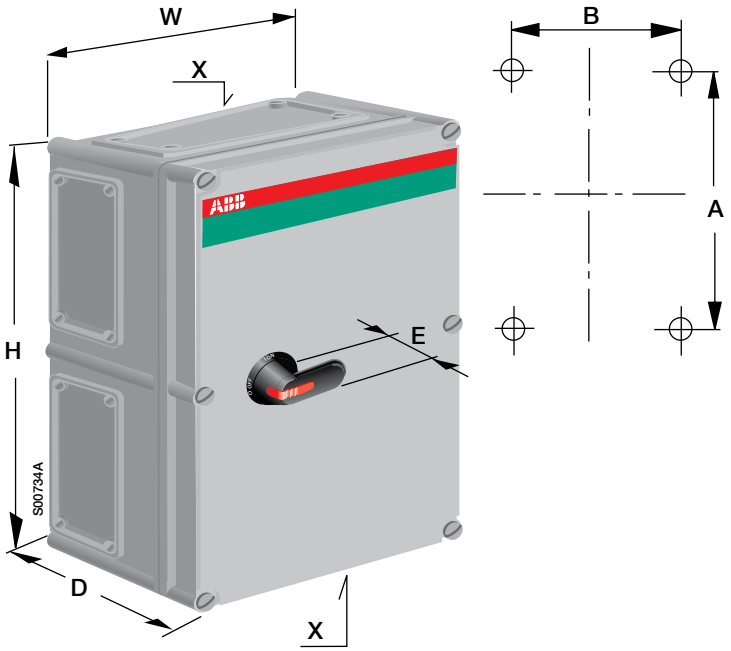

Fixing entry size in enclosure ø 7

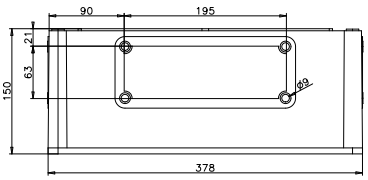

Type
OT90G_6_
OT125G_3_, 4_
OT125G_6_

Type				Size	Cable entry	Fixing dimensions	
Enclosed switch-disconnector	H	W	D	E	X	A	B
3-pole and 4-pole							
OT90G_3_	380	280	130	45	11	355	255
OT125G_3_, 4_	380	280	130	45	11	355	255
6-pole							
OT90G_6_	560	380	180	45	11	535	355
OT125G_6_	560	380	180	45	11	535	355

Dimension drawings

Steel / stainless steel sheet enclosed switch-disconnectors

Enclosed switch-disconnectors with auxiliary contact and 'Safety switch' -sticker, OTL/OTR16...63 with selector handle

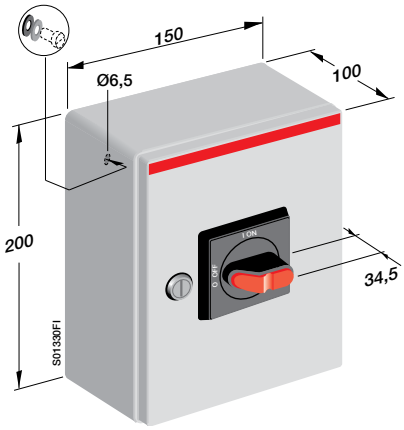

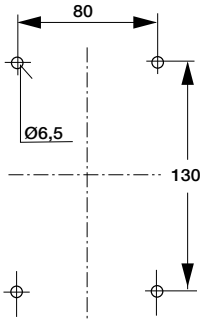

3-pole	OTL, OTR16...63
4-pole	OTL, OTR16...63
6-pole	OTL, OTR16
EMC	OT16...36ETMM3_E, OT16ETMM6_E

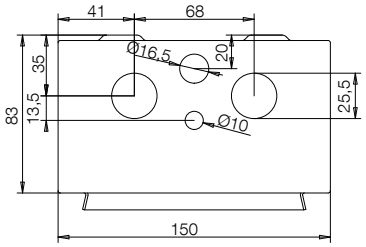

Type	Cable outlets
OTL/OTR16_3M, 4M, 6M	2xØ25.5+Ø16.5
OT16ETMM3_E, 6_E (EMC)	2xØ25.5+Ø16.5

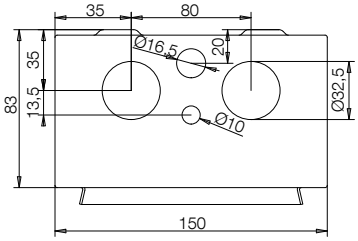

Type	Cable outlets
OTL/OTR25...36_3M, 4M	2xØ32.5+Ø16.5
OT25...36ETMM3_E, 6_E (EMC)	2xØ32.5+Ø16.5

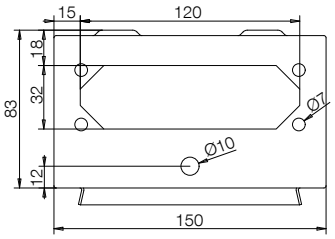

Type	Cable outlets
OTL/OTR16...63_3B, 4B	B-flange
OTL/OTR16_6B	B-flange

Dimension drawings

Steel / stainless steel sheet enclosed switch-disconnectors

Enclosed switch-disconnectors with auxiliary contact and 'Safety switch' -sticker, OTL/OTR25...63, pistol handle

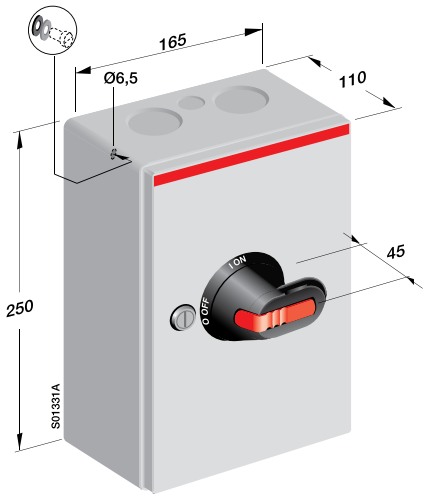

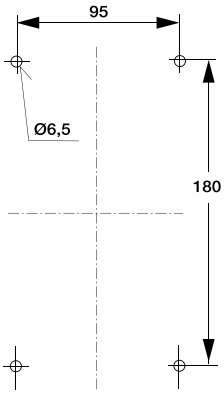

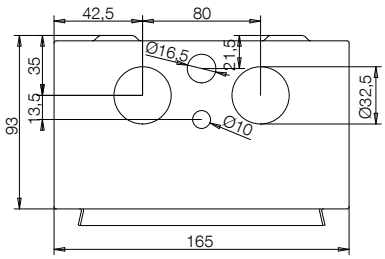

Type	Cable outlets
OTL/OTR63_3M, 4M	2xØ32.5+Ø16.5
OTL/OTR25...36_6M	2xØ32.5+Ø16.5
OT63ETMM3_E (EMC)	2xØ32.5+Ø16.5

3-pole	OTL, OTR63
4-pole	OTL, OTR63
6-pole	OTL, OTR25...36
EMC	OT63ETMM3_E, OT25...36ETMM6_E

Enclosed switch-disconnectors with auxiliary contact and 'Safety switch' -sticker, OTL/OTR75...90, pistol handle

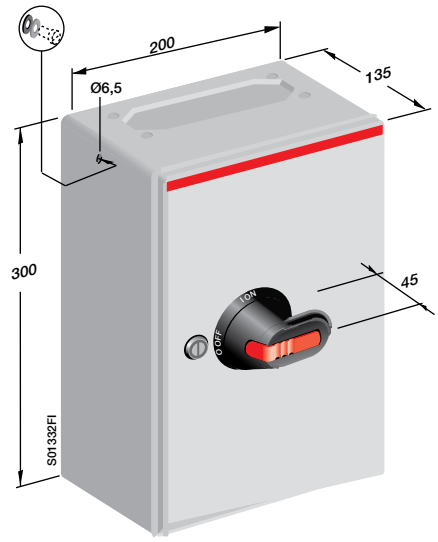

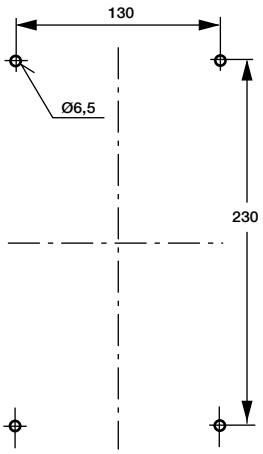

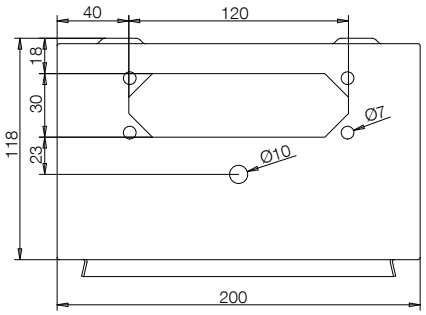

Type	Cable outlets
OTL/OTR75..90_3B, 4B, 6B	B-flange
OTL/OTR25...36_6B	B-flange

3-pole	OTL, OTR75...90
4-pole	OTL, OTR75...90
6-pole	OTL, OTR25...90

Dimension drawings

Steel / stainless steel sheet enclosed switch-disconnectors

Enclosed switch-disconnectors, OTL/OTR16...63B_

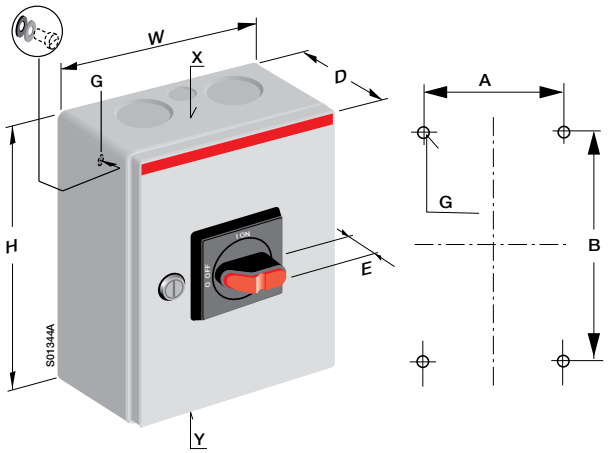

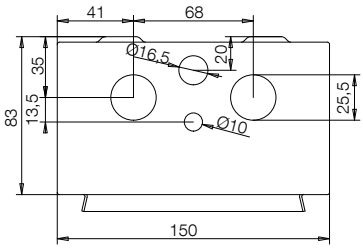

Type	Cable outlets
OTL/OTR16...32_3M, 4M, 6M	2xØ25.5+Ø16.5

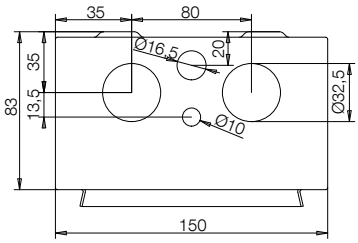

Type	Cable outlets
OTL/OTR45...63_3M, 4M	2xØ32.5+Ø16.5

Enclosed switch-disconnectors

				Size		Cable entry		Fixing dimensions	
Type	H	W	D	E	X	Y	A	B	G
3-pole									
OTL/OTR16B_3M	200	150	100	33	2xø25,5+ø16,5	2xø25,5+ø16,5	80	130	6,6
OTL/OTR25B_3M	200	150	100	33	2xø25,5+ø16,5	2xø25,5+ø16,5	80	130	6,6
OTL/OTR32B_3M	200	150	100	33	2xø25,5+ø16,5	2xø25,5+ø16,5	80	130	6,6
OTL/OTR45B_3M	200	150	100	33	2xø32,5+ø16,5	2xø32,5+ø16,5	80	130	6,6
OTL/OTR63B_3M	200	150	100	33	2xø32,5+ø16,5	2xø32,5+ø16,5	80	130	6,6
4-pole									
OTL/OTR16B_4M	200	150	100	33	2xø25,5+ø16,5	2xø25,5+ø16,5	80	130	6,6
OTL/OTR25B_4M	200	150	100	33	2xø25,5+ø16,5	2xø25,5+ø16,5	80	130	6,6
OTL/OTR32B_4M	200	150	100	33	2xø25,5+ø16,5	2xø25,5+ø16,5	80	130	6,6
OTL/OTR45B_4M	200	150	100	33	2xø32,5+ø16,5	2xø32,5+ø16,5	80	130	6,6
OTL/OTR63B_4M	200	150	100	33	2xø32,5+ø16,5	2xø32,5+ø16,5	80	130	6,6
6-pole									
OTL/OTR16B_6M	200	150	100	33	2xø25,5+ø16,5	2xø25,5+ø16,5	80	130	6,6
OTL/OTR25B_6M	200	150	100	33	2xø25,5+ø16,5	2xø25,5+ø16,5	80	130	6,6
OTL/OTR32B_6M	200	150	100	33	2xø25,5+ø16,5	2xø25,5+ø16,5	80	130	6,6

Dimension drawings

Steel / stainless steel sheet enclosed switch-disconnectors

Enclosed switch-disconnectors, OTL/OTR45...125B_

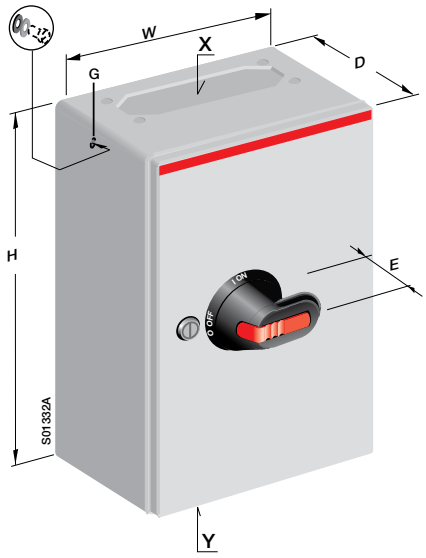

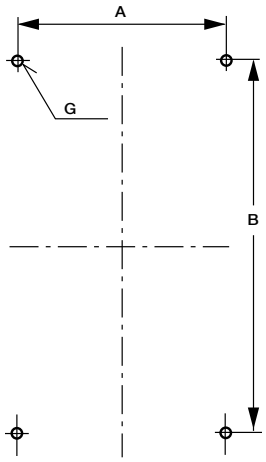

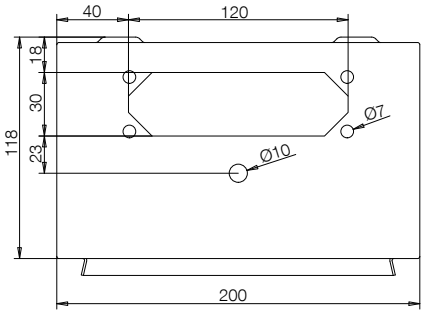

Type	Cable outlets
OTL/OTR100...125_3B, 4B	B-flange
OTL/OTR45...63_6B	B-flange

Enclosed switch-disconnectors, types OTL_ and OTR_

	Size				Cable entry		Fixing dimensions		
Type	**H**	**W**	**D**	**E**	**X**	**Y**	**A**	**B**	**G**
3-pole									
OTL/OTR100B_3B	300	200	135	45	B-flange	B-flange	130	230	6,5
OTL/OTR100B_3U	300	200	135	45	Blank	Blank	130	230	6,5
OTL/OTR125B_3B	300	200	135	45	B-flange	B-flange	130	230	6,5
OTL/OTR125B_3U	300	200	135	45	Blank	Blank	130	230	6,5
4-pole									
OTL/OTR100B_4B	300	200	135	45	B-flange	B-flange	130	230	6,5
OTL/OTR100B_4U	300	200	135	45	Blank	Blank	130	230	6,5
OTL/OTR125B_4B	300	200	135	45	B-flange	B-flange	130	230	6,5
OTL/OTR125B_4U	300	200	135	45	Blank	Blank	130	230	6,5
6-pole									
OTL/OTR45B_6B	300	200	135	45	B-flange	B-flange	130	230	6,5
OTL/OTR45B_6U	300	200	135	45	Blank	Blank	130	230	6,5
OTL/OTR63B_6B	300	200	135	45	B-flange	B-flange	130	230	6,5
OTL/OTR63B_6U	300	200	135	45	Blank	Blank	130	230	6,5

Dimension drawings

Steel sheet enclosed switch-disconnectors

Enclosed switch-disconnectors, OT_

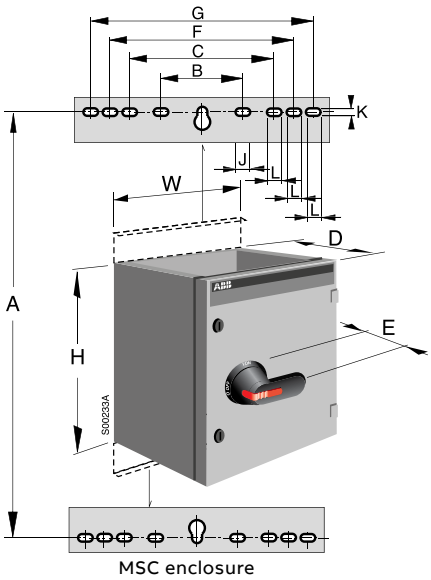

Enclosed switch-disconnectors with auxiliary contact and 'Safety switch' -sticker OT90...125_

	Size				Fixing dimensions					Fixing hole		
Type	H	W	D	E	A	B	C	F	G	J	K	L
3- and 4-pole cable entries from top and bottom												
OT90G_3_, 4_Z	400	250	180	45	445	162	-	-	-	27	11	-
3-pole, cable entries from bottom / 4-pole 250-400A cable entries from bottom												
OT90G_3_Z	400	400	230	45	445	303	-	-	-	35	11	-
OT125G_3_Z	400	400	230	45	445	303	-	-	-	35	11	-
6-pole, cable entries from top and bottom												
OT90G_6_Z	400	400	230	45	645	303	-	-	-	35	11	-
OT125G_6_Z	400	400	230	45	445	303	-	-	-	35	11	-
OT125G_6_Z	600	400	230	45	645	303	-	-	-	35	11	-

Enclosed switch-disconnectors OT63...125_ and Fire rated enclosed switch-disconnectors OKL125N3/4YF_UU_

	Size				Fixing dimensions					Fixing holes		
Type	H	W	D	E	A	B	C	F	G	J	K	L
3- and 4-pole, switch-disconnectors												
OT63E_4_	400	250	180	45	445	162	-	-	-	27	11	-
OT125G_3_, 4_	400	250	180	45	445	162	-	-	-	27	11	-
6-pole, switch-disconnectors												
OT125G_6_	400	400	230	45	445	303	-	-	-	35	11	-
Fire rated enclosed switch-disconectors, F200 and F300												
OKL125N3/4YF3UU0_	600	400	230	45	645	303	-	-	-	35	11	-
OKL125N3/4YF2UU1_	400	250	180	45	445	162	-	-	-	27	11	-

Enclosed switch-disconnectors, OT_, cable entries

OEZXP120C

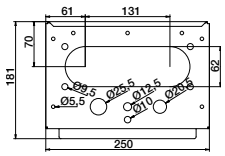

OEZXPE24R

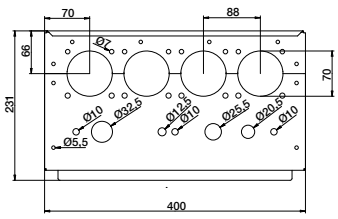

OEZXP240C

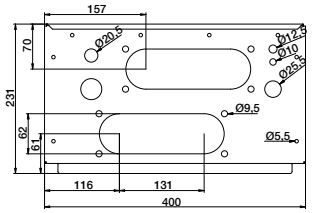

Flange MSCZNE423CC, suitable for types OT90...125GAUM3TZ

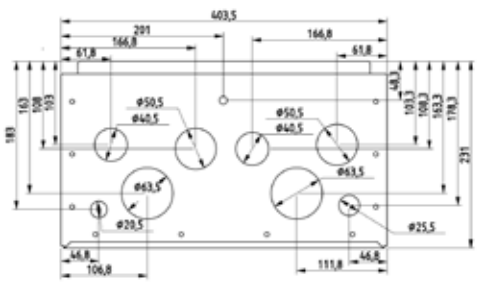

OT125GSUM3TZ

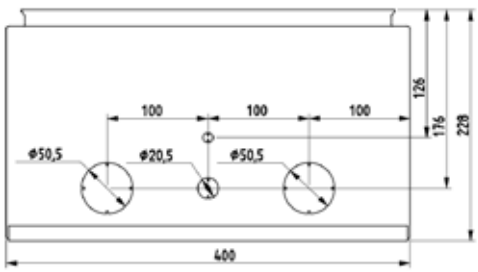

Dimension drawings

Aluminium enclosed switch-disconnectors

Enclosed switch-disconnectors LBAS_, KSE_, KSF_

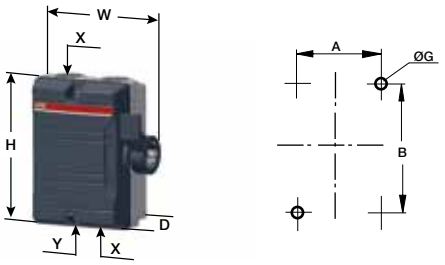

LBAS_16...25 and KSE_25...40

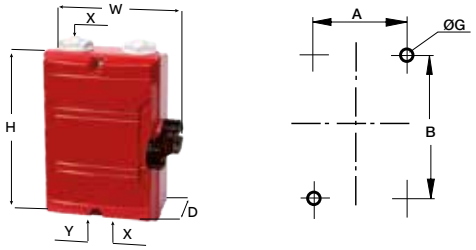

KSF325...440

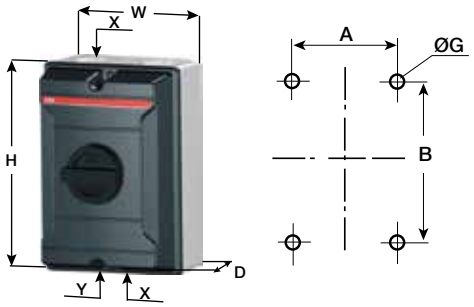

KSE263...4100

Side operated switch-disconnectors, LBAS_16...25 and KSE_25...40

	Size			Cable entry		Fixing dimensions		
Type	**H**	**W**	**D**	**X**	**Y**	**A**	**B**	**C**
2-pole-Aluminium enclosed switch-disconnectors								
KSE225DP	130	111	60	2xM25	-	64	90	5
KSE240DP	168	138	68	2xM25	1xM16	90	127	5
3-pole-Aluminium enclosed switch-disconnectors								
LBAS316_	130	111	60	2xM25	-	64	90	5
LBAS325_	168	138	68	2xM32	1xM16	90	127	5
KSE325TPN	130	111	60	2xM25	-	64	90	5
KSE340TPN	168	138	68	2xM32	1xM16	90	127	5
4-pole-Aluminium enclosed switch-disconnectors								
LBAS416_	130	111	60	2xM25	-	64	90	5
LBAS425_	168	138	68	2xM32	1xM16	90	127	5
KSE425TPSN	130	111	60	2xM25	-	64	90	5
KSE440TPSN	168	138	68	2xM32	1xM16	90	127	5

Fireman's switches, KSF_25...40

	Size			Cable entry		Fixing dimensions		
Type	**H**	**W**	**D**	**X**	**Y**	**A**	**B**	**C**
2-pole-Fireman switch, side operated in Aluminium								
KSF225DP	168	138	68	2xM25	-	64	90	5
3-pole-Fireman switch, side operated in Aluminium								
KSF325TPN	130	111	60	2xM25	-	64	90	5
KSF325TPNNO	130	111	60	2xM25	-	64	90	5
KSF340TPN	168	138	68	2xM32	1xM16	90	127	5
4-pole-Fireman switch, side operated in Aluminium								
KSF425TPSN	130	111	60	2xM25	-	64	90	5
KSF440TPSN	168	138	68	2xM32	1xM16	90	127	5

Front operated switch-disconnectors LBAS_45...90 and KSE_63...125

	Size			Cable entry		Fixing dimensions		
Type	**H**	**W**	**D**	**X**	**Y**	**A**	**B**	**C**
3-pole-Enclosed switch-disconnector, front operated in Aluminium								
LBAS345...390	230	160	118	2xM40	1xM16	124	190	5.3
KSE363 - 3125	230	160	145	2xM40	1xM16	124	190	53
4-pole-Enclosed switch-disconnector, front operated in Aluminium								
KSE463 - 480	230	160	145	2xM40	1xM16	124	190	53

Dimension drawings

Aluminium enclosed switch-disconnectors

Enclosed switch-disconnectors, OTA16...63 and OKA16...63

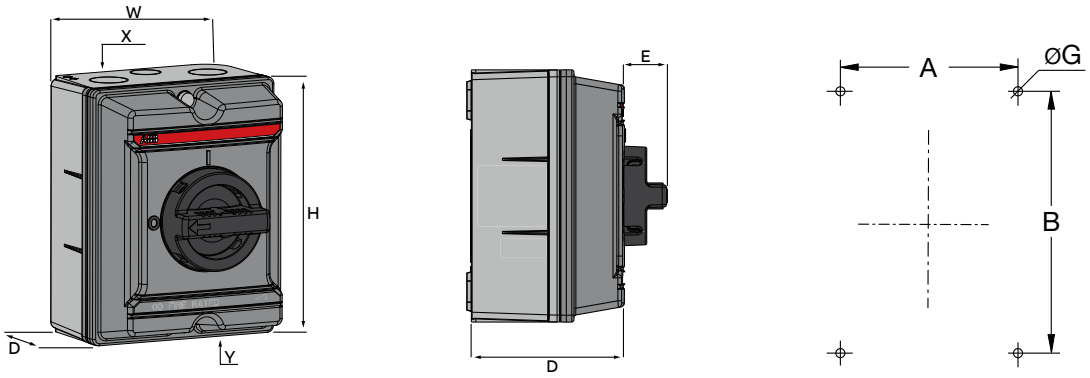

Size				Cable entry		Fixing dimensions		
H	W	D	E	X	Y	A	B	G
165	130	103	28	2xM25 + 1xM20	2xM25 + 1xM20	95	125	6,5

Enclosed switch-disconnectors, OTA125

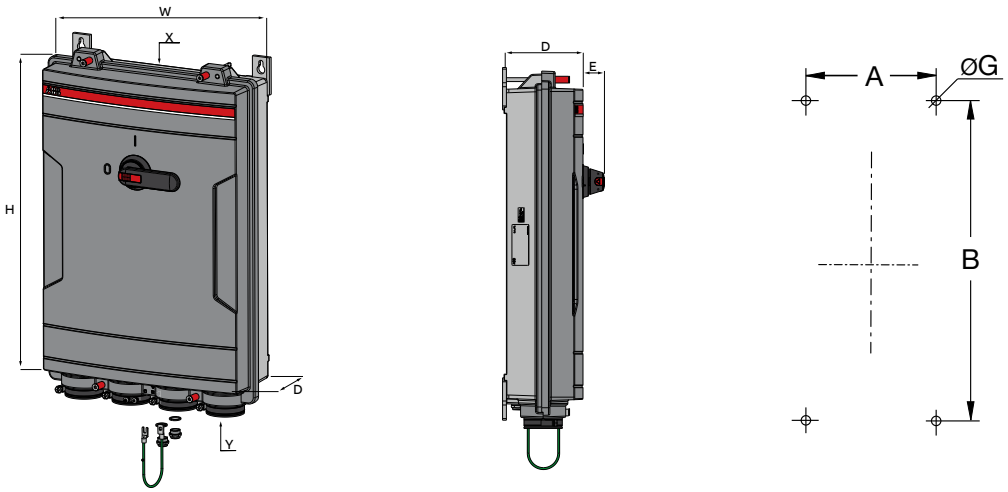

OTA125, OKA125

Size				Cable entry		Fixing dimensions		
H	W	D	E	X	Y	A	B	G
586	425	196	45	-	2xø24-48mm	365	615	9,8



Enclosed switch-disconnectors, 160...1600 A
Table of contents

110	Technical data
115	Ordering information
115	Plastic enclosed safety switches
124	Steel sheet enclosed safety switches and EMC switch-disconnectors
152	Acid-proof / Stainless steel sheet enclosed safety switches
155	Aluminium enclosed safety switches
157	Dimension drawings
195	Accessories

Technical data

Enclosed switch-disconnectors, 160...1600 A

Enclosed switch-disconnectors, types:

- Plastic enclosed: OT_T_, OT_A_ , OT_B, OT_BA
- Steel sheet enclosed: OT_TZ , OT_AZ, OT_BZ , OT_BAZ, EMC-switches: OT_T_TZ , OT_T_AZ , OT_U_TZ, OT_U_AZ
- Acid-proof stainless steel enclosed: OT_R_TZ, OT_S_TZ

Data according to IEC 60947-3	**Switch size**		**160**	**200**	**250**	**315**	**400**
	Switch type		**OT**	**OT**	**OT**	**OT**	**OT**
Rated Insulation voltage		V	750	750	750	750	750
Rated thermal current	40ºC	A	160	200	250	315	400
	60ºC	A	160	200	200	315	320
Rated operational power, AC-23A	230V	kW/A	48/160	55/200	75/250	90/315	110/400
	400V	kW/A	80/160	110/200	132/250	160/315	220/400
	500V	kW/A	112/160	132/200	160/250	200/315	280/400
	690V	kW/A	144/160	160/200	200/250	250/315	355/400
Rated operational current, AC-21A and AC-22A	up to 415 V	A	160	200	250	315	400
	up to 500V	A	160	200	250	315	400
	690V	A	160	200	250	315	400
Rated operational current, AC-23A	up to 415V	A	160	200	250	315	400
	440V	A	125	200	250	315	400
	500V	A	160	200	250	315	400
	690V	A	160	200	250	315	400
Rated conditional short-circuit current r.m.s and corresponding cut-off current of the fuse in single-phase test according to IEC60269	50kA, 400V[1)]	kA	24	35	35	50.5	50.5
	Fuse size:	gG/aM	355/315	355/315	355/315	500/500	500/500
	50kA, 690V[1)]	kA	35	35	35	50.5	50.5
	Fuse size:	gG/aM	355/315	355/315	355/315	500/500	500/500
Rated frequency		Hz	50/60	50/60	50/60	50/60	50/60
Terminal bolt size		mm	M8x25	M8x25	M8x25	M10x30	M10x30
Used switch type			OT160EV_	OT200_	OT250_	OT315_	OT400_

[1)] Lower ratings on plastic 6-pole versions. See ordering information.

Technical data

Enclosed switch-disconnectors, 160...1600 A

Enclosed switch-disconnectors, types:

- Plastic enclosed: OT_T_, OT_A_, OT_B, OT_BA
- Steel sheet enclosed: OT_TZ , OT_AZ, OT_BZ , OT_BAZ, EMC-switches: OT_T_TZ , OT_T_AZ , OT_U_TZ, OT_U_AZ
- Acid-proof stainless steel enclosed: OT_R_TZ, OT_S_TZ

Data according to IEC 60947-3	Switch size		630	800	1000	1250	1600
	Switch type		OT	OT	OT	OT	OT
Rated Insulation voltage		V	750	750	750	750	750
Rated thermal current	40ºC	A	570	720	1000	1250	1600
	60ºC	A	460	580	900[3)]	1000[3)]	1250
Rated operational power, AC-23A	230V	kW/A	180/570	200/720	315/1000	400/1250	
	400V	kW/A	315/570	400/720	560/1000	710/1250	
	500V	kW/A	400/570	500/720	710/1000	900/1250	
	690V	kW/A	560/570	710/720	1000/1000	1200/1250	
Rated operational current, AC-21A and AC-22A	up to 415 V	A	570	720	1000	1250	1600
	up to 500V	A	570	720	1000	1250	1600
	690V	A	570	720	1000	1250	1600
Rated operational current, AC-23A	up to 415V	A	570	720	1000	1250	1250
	440V	A	570	720	1000	1250	1250
	500V	A	570	720	1000	1250	1250
	690V	A	570	720	1000	1250	1250
Rated conditional short-circuit current r.m.s and corresponding cut-off current of the fuse in single-phase test according to IEC60269	50kA, 400V[1)]	kA	71.5	71.5	105	105	105
	Fuse size:	gG/aM	800/1000	800/1000	1000/1000[2)]		
	50kA, 690V[1)]	kA	71.5	71.5	75[2)] 105[3)]	105	105
	Fuse size:	gG/aM	800/1000	800/1000	1000/1000[2)]		
Rated frequency		Hz	50/60	50/60	50/60	50/60	50/60
Terminal bolt size		mm	M12x40	M12x40	M12x50	M12x50	M12/60
Used switch type			OT630_	OT800_	OT1000_	OT1250_	OT1600_

[1)] Lower ratings on plastic 6-pole versions. See ordering information.
[2)] For enclosed switch-disconnectors with auxiliary contact and 'Safety switch' -sticker (Safety switches), EMC-switches and Acid-proof -types.
[3)] For enclosed switch-disconnectors -types, OT_B, OT_BA and OT_BZ , OT_BAZ.

Technical data

Enclosed switch-disconnectors, 160...1600 A

Enclosed switch-disconnectors with auxiliary contact and 'Safety switch' -sticker:

- Aluminium enclosed: OTA

Type / size			OTA 160_	OTA 200_	OTA 250_	OTA 315_	OTA 400_	OTA 600_
Rated insulation voltage		V	1000	1000	1000	1000	1000	1000
Rated thermal current and rated operational current AC20/DC20	40ºC	A	160	200	250	315	400	600
	60ºC	A	160	200	250	315	320	480
Rated operational power and current, AC-23A	up to 415V	kW/A	75/135	110/200	132/250	160/315	220/440	315/540
	up to 500V	kW/A	75/135	132/200	160/250	200/315	280/400	400/552
	690V	kW/A	75/80	160/200	200/250	250/315	355/400	560/551
Rated conditional short-circuit current r.m.s and corresponding cut-off current of the fuse in single-phase test according to IEC60269	100kA, 500V	kA	40.5	61.5	61.5	61.5	61.5	90
	Fuse size: gG/aM	A	315A/315A	500A/500A	500A/450A	500A/450A	500A/450A	800A/1000A
	80kA, 690V	kA	40.5	61.5	61.5	61.5	61.5	90
	Fuse size: gG/aM	A	355A/315A	500A/500A	500A/500A	500A/500A	500A/500A	800A/1000A
Rated frequency		Hz	50/60	50/60	50/60	50/60	50/60	50/60
Terminal bolt size		mm^2	8	10	10	10	10	12
Used switch type			OT160EV12	OT315E03	OT315E03	OT315E03	OT400E03	OT630E03

Colour codes of the enclosures / Enclosed switch-disconnectors

Enclosure type	Colour code/cover	Colour code/box
Steel sheet enclosures		
OTL	RAL 7035	RAL 7035
OT	NCS 1704-Y15R	NCS 1704-Y15R

Technical data

Cabling for enclosed switch-disconnectors, 160...1600 A

Cabling for enclosed switch-disconnectors

Supply cable	Steel sheet, stainless and aluminium enclosed switch disconnectors			
Amount of parallel cables mm²	Cable entries from top and bottom		Cable entries from bottom	
	Enclosed switch-disconnectors with auxiliary contacts and 'Safety switch'-sticker	Enclosed switch-disconnectors without auxiliary contacts	Enclosed switch-disconnectors with auxiliary contacts and 'Safety switch'-sticker	Enclosed switch-disconnectors without auxiliary contacts
Supply cable, cable cross section 10...70 mm²				
1x(10...70)	OT200_, OT250_	OT160_, OT200_	OT200_, OT250_	
1x(10...70)		OT250_		OT200_, OT250_
2x(10...70)	OT200_, OT250_, OT315_, OT400_		OT160_, OT200_, OT250_, OT315_, OT400_	OT200_, OT250_
Supply cable, cable cross section 95...120 mm²				
1x(95...120)	OT_75_, OT_90_, OTA100_, OTA125_			
1x(95...120)	OT90_, OT125_	OT125_	OT90_, OT125_ Outgoing terminals only	
Supply cable, cable cross section 25...120 mm²				
1x(25...120)	OT160_, OT200_, OT250_	OT250_	OT160_, OT200_, OT250_	OT200_, OT250_
1x(25...120)		OT200_		
1x(25...120)	OT315_, OT400_		OT315_, OT400_	
1x(25...120)		OT315_		
1x(25...120)		OT400_		
2x(25...120)	OT160_		OT90G_, OT125_, OT160_	
2x(25...120)	OT200_, OT250_	OT200_, OT250_	OT200_, OT250_	OT200_, OT250_
2x(25...120)	OT315_, OT400_		OT315_, OT400_	
2x(25...120)	OT315_, OT400_		OT315_, OT400_	
Supply cable, cable cross section 70...185 mm²				
1x(70...185)	OT315_, OT400_, OT630_, OT800E_		OT315_, OT400_, OT630_, OT800E_	
1x(70...185)		OT400_		
2x(70...185)	OT315_, OT400_, OT630_, OT800E_		OT315_, OT400_, OT630_, OT800E_	
3x(70...185)	OT630_, OT800_		OT630KA_, OT800_	
4x(70...185)	OT630_, OT800_		OT630KA_, OT800_	
Supply cable, cable cross section 95...240 mm²				
1x(95...240)	OT200_, OT250_, OT315_, OT400_		OT200_, OT250_, OT315_, OT400_	
1x(95...240)		OT250_, OT315_, OT400_		
2x(95...240)	OT200_, OT250_		OT200_, OT250_	
2x(95...240)	OT315_, OT400_		OT315_, OT400_	
Supply cable, cable cross section 120...240 mm²				
1x(120...240)	OT315_, OT400_		OT315_, OT400_	
Supply cable, cable cross section 120....300 mm²				
1x(120...300)	OT315_, OT400_, OT630_, OT800E_		OT315_, OT400_, OT630_, OT800E_	
1x(120...300)		OT630_, OT800_		
2x(120...300)	OT315_, OT400_, OT630_, OT800E_		OT630_, OT800E_	
2x(120...300)		OT630_, OT800_		
2x(120...300)	OT1000_, OT1250_		OT1000_, OT1250_	
2x(120...300)		OT1000_, OT1250_, OT1600_		
3x(120...300)	OT630_, OT800E_		OT630KA_, OT800_	
3x(120...300)	OT1000_, OT1250_		OT1000_, OT1250_	
3x(120...300)		OT1000_, OT1250_, OT1600_		
4x(120...300)	OT630_, OT800_		OT630KA_, OT800_	
4x(120...300)	OT1000_, OT1250_		OT1000_, OT1250_	
4x(120...300)		OT1000_, OT1250_, OT1600_		
5x(120...300)	OT1000BL_, OT1250EL_ [1)]			
5x(120...300)		OT1600_		
6x(120...300)		OT1600_		

[1)] For 800 mm wide enclosure only

Technical data

Cabling for enclosed switch-disconnectors, 160...1600 A

Cabling for enclosed switch-disconnectors; Terminals, busbars and terminal bolt set

Supply cable	Cable entries from top and bottom			Cable entries from bottom	
Amount of parallel cables mm²	Mounting accessories (to supply side)		Terminal clamp (N-pole)	Mounting accessories (to supply side)	
	Enclosed switch-disconnectors with auxiliary contacts and 'Safety switch'-sticker	Enclosed switch-disconnectors without auxiliary contacts		Enclosed switch-disconnectors with auxiliary contacts and 'Safety switch'-sticker	Enclosed switch-disconnectors without auxiliary contacts
Supply cable, cable cross section 10...70 mm²					
1x(10...70)	OZXB1L	OZXB1/1	OZXB1/1	OZXB1L	OZXB1L
1x(10...70)	OZXB1L	OZXB1L/1	OZXB1L/1		OZXB1L
2x(10...70)	2xOZXB1+OZXE20	OZXE20+2xOZXB1/1	OZXE20+2xOZXB1/1	OZXE20+2xOZXB1	2xOZXB1
Supply cable, cable cross section 95...120 mm²					
1x(10...70)	OZXT2				
1x(10...70)	OZXT2	OZXB1/1			OZXB1L
Supply cable, cable cross section 25...120 mm²					
1x(25...120)	OZXB2	OZXB2/1	OZXB2/1		OZXB2
1x(25...120)	OZXB2	OZXE51/1E+OZXB2L/1	OZXE51/1E+OZXB2L/1		
1x(25...120)	OZXB2L				OZXB2L
1x(25...120)	OZXB2L+OZXB2K	OZXB2/1	OZXB2/1		
1x(25...120)	OZXB2L+OZXB2K	OZXB2L/1	OZXB2L/1		
2x(25...120)	OZXE21 + 2xOZXE56+2xOZXB2			OZXE21 + 2xOZXE56+2xOZXB2	2xOZXB2
2x(25...120)	OZXE45+OZXB2+OZXB2L	OZXE45+OZXB2+OZXB2L	OZXE45+OZXB2+OZXB2L	OZXE21 + 2xOZXE56+2xOZXB2	2xOZXB2
2x(25...120)	OZXE21 + 2xOZXE56+2xOZXB2			OZXE21 + 2xOZXE56+2xOZXB2	2xOZXB2
2x(25...120)	OZXE21 + 2xOZXE56+2xOZXB2L			OZXE21 + 2xOZXE56+2xOZXB2L	2xOZXB2L+OZXE54
Supply cable, cable cross section 70...185 mm²					
1x(70...185)	OZXB3				OZXB3
1x(70...185)	OZXB3+OZXB3K	OZXB3/1	OZXB3/1		
2x(70...185)	OZXB4				OZXB4
3x(70...185)	OZXE19+OZXB3+OZXB4			OZXE19	OZXB3+OZXB4
4x(70...185)	OZXE19+2xOZXB4			OZXE19	2xOZXB4
Supply cable, cable cross section 95...240 mm²					
1x(95...240)	OZXB9				OZXB9
1x(95...240)	OZXB9	OZXB9/1	OZXB9/1		
2x(95...240)	OZXE45+2xOZXB9+OZXE56			OZXE45+OZXE56	2xOZXB9+OZXE56
2x(95...240)	OZXE46+2xOZXB9+OZXE57			OZXE46+OZXE57	2xOZXB9+OZXE57
Supply cable, cable cross section 120...240 mm²					
1x(120...240)	OZXB7				
Supply cable, cable cross section 120....300 mm²					
1x(120...300)	OZXB5				OZXB5
1x(120...300)	OZXB5+OZXB4K	OZXB5/1	OZXB5/1		
2x(120...300)	OZXB6				OZXB6
2x(120...300)	OZXB6+OZXB4K	OZXB6/1	OZXB6/1		
2x(120...300)	2xOZXB5				2xOZXB5
2x(120...300)	2xOZXB5	2xOZXB5/1	2xOZXB5/1		
3x(120...300)	OZXE19+OZXB5+OZXB6			OZXE19	OZXB5+OZXB6
3x(120...300)	OZXB5+OZXB6				OZXB5+OZXB6
3x(120...300)	OZXB5+OZXB6	OZXB5/1+OZXB6/1	OZXB5/1+OZXB6/1		
4x(120...300)	OZXE19+2xOZXB6			OZXE19	2xOZXB6
4x(120...300)	2xOZXB6				2xOZXB6
4x(120...300)	2xOZXB6	2xOZXB6/1	2xOZXB6/1		
5x(120...300)	OZXE19+2xOZXB6+OZXB5				
5x(120...300)	2xOZXB6+OZXB5	2xOZXB6/1+OZXB5/1	2xOZXB6/1+OZXB5/1		
6x(120...300)	2xOZXB6+2xOZXB5	2xOZXB6/1+2xOZXB5/1	2xOZXB6/1+2xOZXB5/1		

[1] For 800 mm wide enclosure only

Type key

Plastic enclosed switch-disconnectors, 160...1600 A

Front operated plastic enclosed switch-disconnectors

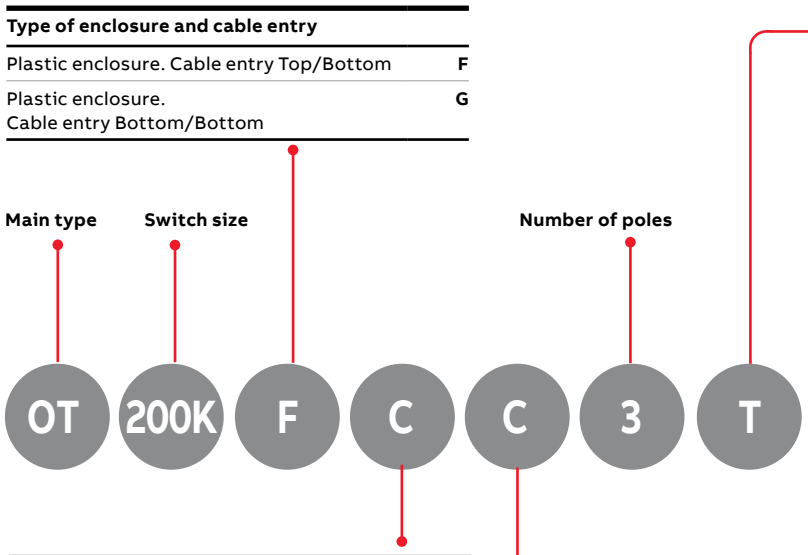

Type of enclosure and cable entry	
Plastic enclosure. Cable entry Top/Bottom	F
Plastic enclosure. Cable entry Bottom/Bottom	G

Enclosed switch-disconnector	
Enclosed switch-disconnector with auxiliary contact and 'Safety switch' sticker, black handle	T
Enclosed switch-disconnector with auxiliary contact and 'Safety switch' sticker, red/yellow handle	A
Enclosed switch-disconnector without auxiliary contact, black handle	B
Enclosed switch-disconnector without auxiliary contact, red/yellow handle	BA

Upper end configuration for the enclosure	
Space for II-flange	C

Lower end configuration for the enclosure	
Space for II-flange	C

Ordering information

Plastic enclosed switch-disconnectors, 160...1600 A



OT160EVFCC3T,
OT200...250KFCC3T



OT315KFCC3T



OT400DFCC3T



OT630KFCC3T,
OT1000BFCC3T,
OT400DGCC3T,
OT630KGCC3T



OT200...315KGCC3T

Enclosed switch-disconnectors with auxiliary contact and 'Safety switch' -sticker, 3-pole, IP65, black handle

The delivery includes a black pistol handle (I-O/ON-OFF), PE-terminal, knock-out openings and auxiliary contacts according to the table below. Grey enclosure. Cover interlock and defeatable interlock included.

Cable entries from top and bottom

Max. motor output/ AC-23A			Enclosure dimensions					
415V	690V	Cable outlets/	Height	Width	Depth			Weight /unit
kW/A	kW/A	side	mm	mm	mm	Type	Order number	kg
Cable outlet type: Threaded knock-out Auxiliary contacts included: 1NO • Auxiliary contacts max: 2NO+2NC								
80/160	144/160	II-flange/II-flange	560	280	130	OT160EVFCC3T	1SCA148656R1001	5.4
110/200	160/200		560	280	130	OT200KFCC3T*	1SCA022260R5370	9
132/250	200/250		560	280	130	OT250KFCC3T	1SCA022276R8830	9
160/315	250/315		560	380	180	OT315KFCC3T	1SCA022276R9810	9
220/400	355/400		840	380	180	OT400DFCC3T	1SCA022277R0490	16
315/570	560/570	2xII-flange/	760	560	250	OT630KFCC3T	1SCA022277R1030	20
560/1000	1000/1000	2xII-flange	760	560	250	OT1000BFCC3T	1SCA022277R1620	35

* Also available with lockable handle in On-position

Cable entries from bottom

Max. motor output/ AC-23A			Enclosure dimensions					
415V	690V		Height	Width	Depth			Weight /unit
kW/A	kW/A	Cable outlets/side	mm	mm	mm	Type	Order number	kg
Cable outlet type: Knock-out Auxiliary contacts included: 2NO+2NC • Auxiliary contacts max: 2NO+2NC								
110/200	160/200	II-flange/II-flange	560	380	180	OT200KGCC3T	1SCA022276R8670	9
132/250	200/250		560	380	180	OT250KGCC3T	1SCA022276R9640	9
160/315	250/315		560	380	180	OT315KGCC3T	1SCA022277R0220	9
220/400	355/400	2xII-flange/2xII-flange	760	560	250	OT400DGCC3T	1SCA022277R0810	24
315/570	560/570		760	560	250	OT630KGCC3T	1SCA022277R1460	26

Compression glands or flanges to be ordered separately.

Ordering information

Plastic enclosed switch-disconnectors, 160...1600 A



OT160EVFCC3B



OT200...315KFCC3B



OT630...800KFCC3B

Enclosed switch-disconnectors, 3-pole, black handle, IP65

The delivery includes a handle (I-O/ON-OFF), N- and PE-terminals and knock-out openings. Grey enclosure. Includes black pistol handle with cover interlock and defeatable interlock function.

Cable entries from top and bottom

Max. motor output/ AC-23A		Cable outlets/ side	Dimensions			Type	Order number	Weight /unit
415V	690V		Height	Width	Depth			
kW/A	kW/A		mm	mm	mm			kg
Auxiliary contacts included: none • Auxiliary contacts max: 2NO+1NC								
88 / 160	144 / 160	II-flange / II-flange	380	280	130	OT160EVFCC3B	1SCA148615R1001	4.0
110 / 200	200 / 200		560	380	180	OT200KFCC3B*	1SCA022278R1510	9.0
110 / 250	200 / 250		560	380	180	OT250KFCC3B	1SCA022278R2150	9.0
180 / 315	315 / 315		560	380	180	OT315KFCC3B	1SCA022278R2740	9.0
230 / 400	400 / 400		840	380	180	OT400DFCC3B	1SCA022278R3390	16.0
315 / 570	560 / 570	2xII-flange / 2xII-flange	760	560	250	OT630KFCC3B	1SCA022278R3980	20.0
400 / 720	710 / 720		760	560	250	OT800KFCC3B	1SCA022303R0310	20.0

* Also available with lockable handle in On-position

Threaded knock-outs, compression glands have to be ordered separately
Knock-out flanges, flanges have to be ordered separately.

Ordering information

Plastic enclosed switch-disconnectors, 160...1600 A



OT160EVFCC3A,
OT200...315KFCC3A



OT400DFCC3A



OT630KFCC3A



OT315KFCC3A,
OT200...315KGCC3A



OT1000BFCC3A,
OT400DGCC3A,
OT630KGCC3A

Enclosed switch-disconnectors with auxiliary contact and 'Safety switch' -sticker, 3-pole, IP65, red-yellow handle

The delivery includes a red-yellow handle (I-O/ON-OFF), PE-terminal, knock-out openings and auxiliary contacts according to the table below. Grey enclosure. Cover interlock and defeatable interlock included.

Cable entries from top and bottom

Max. motor output/ AC-23A			Enclosure dimensions					Weight /unit
415V	690V	Cable outlets	Height	Width	Depth			
kW/A	kW/A	/side	mm	mm	mm	Type	Order number	kg
Auxiliary contacts included: 2NO+1NC • Auxiliary contacts max: 2NO+2NC								
80/160	144/160	II-flange/II-flange	560	280	130	OT160EVFCC3A	1SCA148655R1001	5.4
110/200	160/200		560	280	130	OT200KFCC3A	1SCA022278R1340	9
132/250	200/250		560	280	130	OT250KFCC3A	1SCA022278R1930	9
160/315	250/315		560	380	180	OT315KFCC3A	1SCA022278R2580	9
220/400	355/400		840	380	180	OT400DFCC3A	1SCA022278R3120	16
315/570	560/570		760	560	250	OT630KFCC3A	1SCA022278R3710	20
560/1000	1000/1000	2xII-flange/2xII-flange	760	560	250	OT1000BFCC3A	1SCA022297R5620	35

Cable entries from bottom

Max. motor output/ AC-23A			Enclosure dimensions					Weight /unit
415V	690V		Height	Width	Depth			
kW/A	kW/A	Cable outlets/side	mm	mm	mm	Type	Order number	kg
Auxiliary contacts included: 2NO+1NC • Auxiliary contacts max: 2NO+1NC								
110/200	160/200	II-flange/II-flange	560	380	180	OT200KGCC3A	1SCA022297R6010	9
132/250	200/250		560	380	180	OT250KGCC3A	1SCA022297R6270	9
160/315	250/315		560	380	180	OT315KGCC3A	1SCA022298R8280	9
220/400	355/400	2xII-flange/2xII-flange	760	560	250	OT400DGCC3A	1SCA022297R6430	24
315/570	560/570		760	560	250	OT630KGCC3A	1SCA022297R6600	26

Compression glands or flanges to be ordered separately.

Ordering information

Plastic enclosed switch-disconnectors, 160...1600 A



OT160EVFCC3BA



OT200...315KFCC3BA



OT400DFCC3BA



OT630...800KFCC3BA

Enclosed switch-disconnectors, 3-pole, red-yellow handle, IP65

The delivery includes a handle (I-O/ON-OFF), N- and PE-terminals and knock-out openings. Grey enclosure. Includes red-yellow pistol handle with cover interlock and defeatable interlock function.

Cable entries from top and bottom

Rated current			Dimensions					Weight
AC-22A	AC-23A	Cable	Height	Width	Depth			/unit
415V	415V	outlets/side	mm	mm	mm	Type	Order number	kg
Auxiliary contacts included: none • Auxiliary contacts max: 2NO+1NC								
88 / 160	144 / 160	II-flange / II-flange	380	280	130	OT160EVFCC3BA	1SCA148616R1001	4.0
110 / 200	200 / 200		560	380	180	OT200KFCC3BA	1SCA022833R9950	9.0
110 / 250	200 / 250		560	380	180	OT250KFCC3BA	1SCA022834R0020	9.0
180 / 315	315 / 315		560	380	180	OT315KFCC3BA	1SCA022834R0110	9.0
230 / 400	400 / 400		840	380	180	OT400DFCC3BA	1SCA022834R0290	16.0
315 / 570	560 / 570	2xII-flange / 2xII-flange	760	560	250	OT630KFCC3BA	1SCA022834R0370	20.0
400 / 720	710 / 720		760	560	250	OT800KFCC3BA	1SCA022834R0450	30.0

Knock-out flanges, flanges have to be ordered separately.
Threaded knock-outs, compression glands have to be ordered separately.

Ordering information

Plastic enclosed switch-disconnectors, 160...1600 A



OT200...315KFCC4T



OT400DFCC4T



OT160EVFCC4B



OT200...315KFCC4B



OT400DFCC4B



OT630...800KFCC4B

Enclosed switch-disconnectors with auxiliary contact and 'Safety switch' -sticker, 4-pole, IP65, black handle

The delivery includes a black handle (I-O/ON-OFF), PE-terminals, knock-out openings and auxiliary contacts according to the table below. Cover interlock and defeatable interlock included.

Cable entries from top and bottom

Max. motor output/ AC-23A			Enclosure dimensions					
415V	690V	Cable outlets/	Height	Width	Depth			Weight /unit
kW/A	kW/A	side	mm	mm	mm	Type	Order number	kg
Auxiliary contacts included: 2NO+1NC • Auxiliary contacts max: 2NO+1NC								
80/160	144/160	II-flange/II-flange	560	280	180	OT160EVFCC4T	1SCA148675R1001	7.5
110/200	160/200		560	380	180	OT200KFCC4T	1SCA022367R9430	9.3
132/250	200/250		560	380	180	OT250KFCC4T	1SCA022619R2250	9.3
160/315	250/315		560	380	180	OT315KFCC4T	1SCA022367R9510	9.3
220/400	355/400		840	380	180	OT400DFCC4T	1SCA022623R3970	17

Compression glands or flanges to be ordered separately.

Enclosed switch-disconnectors, 4-pole, black handle, IP65

The delivery includes a handle (I-O/ON-OFF), N- and PE-terminals and knock-out openings. Grey enclosure. Includes black pistol handle with cover interlock and defeatable interlock function.

Cable entries from top and bottom

Max. motor output/ AC-23A			Dimensions					
415V	690V	Cable	Height	Width	Depth			Weight /unit
kW/A	kW/A	outlets/side	mm	mm	mm	Type	Order number	kg
Auxiliary contacts included: none • Auxiliary contacts max: 2NO+1NC								
88 / 160	144 / 160	II-flange / II-flange	380	280	130	OT160EVFCC4B	1SCA148617R1001	4.0
110 / 200	200 / 200		560	380	180	OT200KFCC4B*	1SCA022530R4450	9.0
110 / 250	200 / 250		560	380	180	OT250KFCC4B*	1SCA022530R4530	9.0
180 / 315	315 / 315		560	380	180	OT315KFCC4B*	1SCA022548R6710	9.0
230 / 400	400 / 400		840	380	180	OT400DFCC4B*	1SCA022609R5480	16.0
315 / 570	560 / 570	2xII-flange / 2xII-flange	760	560	250	OT630KFCC4B	1SCA022584R5700	20.0
400 / 720	710 / 720		760	560	250	OT800KFCC4B	1SCA022609R5560	20.0

* Also available with lockable handle in On-position

Threaded knock-outs, compression glands have to be ordered separately.
Knock-out flanges, flanges have to be ordered separately.

Ordering information

Plastic enclosed switch-disconnectors, , 160...1600 A



OT125GFCC4A



OT160EVFCC4A, OT200...315KFCC4A



OT400DFCC4A



OT160EVFCC4BA



OT200...315KFCC4BA



OT400DFCC4BA



OT630...800KFCC4BA

Enclosed switch-disconnectors with auxiliary contact and 'Safety switch' -sticker, 4-pole, IP65, red-yellow handle

The delivery includes a red-yellow handle (I-O/ON-OFF), N- and PE-terminals, knock-out openings and auxiliary contacts according to the table below. Grey enclosure. Cover interlock and defeatable interlock included.

Cable entries from top and bottom

Max. motor output/ AC-23A			Enclosure dimensions					
415V	690V	Cable openings	Height	Width	Depth			Weight /unit
kW/A	kW/A	/side	mm	mm	mm	Type	Order number	kg
Auxiliary contacts included: 2NO+1NC • Auxiliary contacts max: 2NO+1NC								
80/160	144/160	II-flange/II-flange	560	380	180	OT160EVFCC4A	1SCA148674R1001	7.5
110/200	160/200		560	380	180	OT200KFCC4A	1SCA022745R6460	9.3
132/250	200/250		560	380	180	OT250KFCC4A	1SCA022745R6540	9.3
160/315	250/315		560	380	180	OT315KFCC4A	1SCA022745R6620	9.3
220/400	355/400		840	380	180	OT400DFCC4A	1SCA022745R6710	17

Compression glands or flanges to be ordered separately.

Enclosed switch-disconnectors, 4-pole, red-yellow handle, IP65

The delivery includes a handle (I-O/ON-OFF), N- and PE-terminals and knock-out openings. Grey enclosure. Includes red-yellow pistol handle with cover interlock and defeatable interlock function.

Cable entries from top and bottom

Max. motor output/ AC-23A			Dimensions					
415V	690V	Cable	Height	Width	Depth			Weight /unit
kW/A	kW/A	outlets/side	mm	mm	mm	Type	Order number	kg
Auxiliary contacts included: none • Auxiliary contacts max: 2NO+1NC								
88 / 160	144 / 160	II-flange / II-flange	380	280	130	OT160EVFCC4BA	1SCA148618R1001	4.3
110 / 200	200 / 200		560	380	180	OT200KFCC4BA	1SCA022834R0530	9.0
110 / 250	200 / 250		560	380	180	OT250KFCC4BA	1SCA022834R0610	9.0
180 / 315	315 / 315		560	380	180	OT315KFCC4BA	1SCA022834R0700	9.0
230 / 400	400 / 400		840	380	180	OT400DFCC4BA	1SCA022834R0880	16.0
315 / 570	560 / 570	2xII-flange / 2xII-flange	760	560	250	OT630KFCC4BA	1SCA022834R1000	20.0
400 / 720	710 / 720		760	560	250	OT800KFCC4BA	1SCA022834R1180	30.0

Threaded knock-outs, compression glands have to be ordered separately.
Knock-out flanges, flanges have to be ordered separately.

Ordering information

Plastic enclosed switch-disconnectors, 160...1600 A



OT160EVFCC6T,
OT200...315KFCC6T,
OT400DFCC6T



OT200...315KFCC6B,
OT400DFCC6B

Enclosed switch-disconnectors with auxiliary contact and 'Safety switch' -sticker, 6-pole, IP65, black handle

The delivery includes a black handle (I-O/ON-OFF), PE-terminals, knock-out openings and auxiliary contacts according to the table below. Grey enclosure. Cover interlock and defeatable interlock included.

Cable entries from top and bottom

Max. motor output/ AC-23A			Enclosure dimensions					
415V	690V	Cable outlets	Height	Width	Depth			Weight /unit
kW/A	kW/A	/side	mm	mm	mm	Type	Order number	kg
Auxiliary contacts included: 4NO+2NC • Auxiliary contacts max: 4NO+2NC								
80/160	144/160	2xII-flange/2xII-flange	760	560	250	OT160EVFCC6T	1SCA148660R1001	13.5
110/200	160/200		760	560	250	OT200KFCC6T	1SCA022260R5530	21
132/250	200/250		760	560	250	OT250KFCC6T	1SCA022276R9480	21
160/315	250/315		760	560	250	OT315KFCC6T	1SCA022277R0060	21
220/400	355/400		760	560	250	OT400DFCC6T	1SCA022277R0650	29

Compression glands or flanges to be ordered separately.

Enclosed switch-disconnectors, 6-pole, black handle, IP65

The delivery includes a handle (I-O/ON-OFF), N- and PE-terminals and knock-out openings. Grey enclosure. Includes black pistol handle with cover interlock and defeatable interlock function.

Cable entries from top and bottom

Max. motor output/ AC-23A			Dimensions					
415V	690V	Cable	Height	Width	Depth			Weight /unit
kW/A	kW/A	outlets/side	mm	mm	mm	Type	Order number	kg
Auxiliary contacts included: none • Auxiliary contacts max: 2NO+1NC								
110 / 200	200 / 200	2xII-flange / 2xII-flange	760	560	250	OT200KFCC6B	1SCA022325R1750	21.0
110 / 250	200 / 250		760	560	250	OT250KFCC6B	1SCA022512R1450	21.0
180 / 315	315 / 315		760	560	250	OT315KFCC6B	1SCA022845R2170	21.0
230 / 400	400 / 400		760	560	250	OT400DFCC6B	1SCA022325R2130	29.0

Threaded knock-outs, compression glands have to be ordered separately.
Knock-out flanges, flanges have to be ordered separately.

Ordering information

Plastic enclosed switch-disconnectors, 160...1600 A



OT160EVFCC6A, OT200...315KFCC6A, OT400DFCC6A



OT200...315KFCC6BA, OT400DFCC6BA

Enclosed switch-disconnectors with auxiliary contact and 'Safety switch' -sticker, 6-pole, IP65, red-yellow handle

The delivery includes a red-yellow handle (I-O/ON-OFF), PE-terminal, knock-out openings and auxiliary contacts according to the table below. Grey enclosure. Cover interlock and defeatable interlock included.

Cable entries from top and bottom

Max. motor output/ AC-23A			Enclosure dimensions					Weight /unit
415V	690V	Cable	Height	Width	Depth			
kW/A	kW/A	openings/side	mm	mm	mm	Type	Order number	kg
Auxiliary contacts included: 4NO+2NC • Auxiliary contacts max: 4NO+2NC								
80/160	144/160	2xII-flange/2xII-flange	760	560	250	OT160EVFCC6A	1SCA148661R1001	13.5
110/200	160/200		760	560	250	OT200KFCC6A	1SCA022297R8480	21
132/250	200/250		760	560	250	OT250KFCC6A	1SCA022297R8640	21
160/315	250/315		760	560	250	OT315KFCC6A	1SCA022292R7730	21
220/400	355/400		760	560	250	OT400DFCC6A	1SCA022297R8810	29

Compression glands or flanges to be ordered separately.

Enclosed switch-disconnectors, 6-pole, red-yellow handle, IP65

The delivery includes a handle (I-O/ON-OFF), N- and PE-terminals and knock-out openings. Grey enclosure. Includes red-yellow pistol handle with cover interlock and defeatable interlock function.

Cable entries from top and bottom

Max. motor output/ AC-23A			Dimensions					Weight /unit
415V	690V	Cable	Height	Width	Depth			
kW/A	kW/A	outlets/side	mm	mm	mm	Type	Order number	kg
Auxiliary contacts included: none • Auxiliary contacts max: 4NO+2NC								
110 / 200	200 / 200	2xII-flange / 2xII-flange	760	560	250	OT200KFCC6BA	1SCA022845R1790	21.0
110 / 250	200 / 250		760	560	250	OT250KFCC6BA	1SCA022512R1450	21.0
180 / 315	315 / 315		760	560	250	OT315KFCC6BA	1SCA022845R1950	21.0
230 / 400	400 / 400		760	560	250	OT400DFCC6BA	1SCA022845R2090	29.0

Threaded knock-outs, compression glands have to be ordered separately.
Knock-out flanges, flanges have to be ordered separately.

Ordering Information

Steel sheet enclosed switch-disconnectors, 160...1600A

Type key

Steel sheet enclosed switch-disconnectors, type OT_

Type of enclosure and cable entry	
Steel sheet enclosure. Cable entry Top/Bottom	**L**
Steel sheet enclosure. Cable entry Bottom/Bottom	**A**
Steel sheet enclosure. Cable entry Top/Top	**D**
Steel sheet enclosure. EMC. Cable entry Top/Bottom	**T**
SSteel sheet enclosure. EMC. Cable entry Bottom/Bottom	**U**

Enclosed switch-disconnector	
Enclosed switch-disconnector with auxiliary contact and 'Safety switch' sticker, black handle	**T**
Enclosed switch-disconnector with auxiliary contact and 'Safety switch' sticker, red/yellow handle	**A**
Enclosed switch-disconnector without auxiliary contact, black handle	**B**
Enclosed switch-disconnector without auxiliary contact, red/yellow handle	**BA**

IP class	
IP65	**Z**

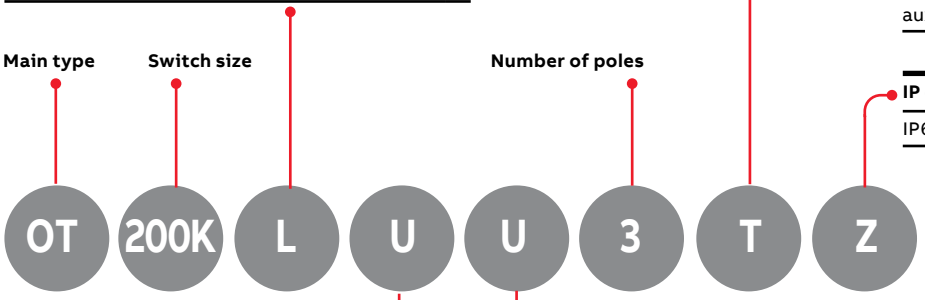

Upper end configuration for the enclosure	
Space for B-flange	**B**
Space for C-flange	**C**
Space for ring flange	**R**
Space for M glands	**M**
Closed ends	**U**

Lower end configuration for the enclosure	
Space for B-flange	**B**
Space for C-flange	**C**
Space for ring flange	**R**
Space for M glands	**M**
Closed ends	**U**

Ordering information

Steel sheet enclosed switch-disconnectors, 160...1600 A



OT200...315KLUU3TZ

Enclosed switch-disconnectors with auxiliary contact and 'Safety switch' -sticker, with blank cable entries, 3-pole, IP65, black handle

The delivery includes a black pistol type handle (I-O/ON-OFF), PE-terminal and grey enclosure. The blank cable plates are used also for fixing the enclosed switch-disconnectors. Auxiliary contacts are wired to the terminal blocks in sizes 200A...800A. Cover interlock and defeatable interlock included.

Cable entries from bottom

Max. motor output/ AC-23A			Enclosure dimensions					
415V	690V	Cable outlets	Height	Width	Depth			Weight /unit
kW/A	kW/A	/side	mm	mm	mm	Type	Order number	kg
Auxiliary contacts included: 2NO+1NC • Auxiliary contacts max: 2NO+1NC								
110/200	160/200	Blank/Blank	600	400	230	OT200KLUU3TZ	1SCA022581R0310	30
132/250	200/250		600	400	230	OT250KLUU3TZ	1SCA022581R0400	21
160/315	250/315		600	400	230	OT315KLUU3TZ	1SCA022581R0580	21
220/400	355/400		800	400	230	OT400DLUU3TZ	1SCA022581R0660	22.07

Compression glands or flanges to be ordered separately.
[1] Knock-outs 10, 12.5, 20.5, 25.5, 32.5, 40.5 mm



OT200...250KLUU3AZ



OT400DLUU3AZ



OT1000BLUU3AZ

Enclosed switch-disconnectors with auxiliary contact and 'Safety switch' -sticker with blank cable entries, 3-pole, IP65, red-yellow handle

The delivery includes a red-yellow pistol handle (I-O/ON-OFF), PE-terminal and grey enclosure. Blank cable entries. The blank cable plates are used also for fixing the enclosed switch-disconnectors. Auxiliary contacts are wired to the terminal blocks in sizes 200A...800A. Cover interlock and defeatable interlock included.

Cable entries from top and bottom

Max. motor output/ AC-23A			Enclosure dimensions					
415V	690V	Cable	Height	Width	Depth			Weight /unit
kW/A	kW/A	openings/side	mm	mm	mm	Type	Order number	kg
Auxiliary contacts included: 2NO+1NC • Auxiliary contacts max: 2NO+1NC								
110/200	160/200	Blank/Blank	600	400	230	OT200KLUU3AZ	1SCA022549R2190	30
132/250	200/250		600	400	230	OT250KLUU3AZ	1SCA022549R2270	21
220/400	355/400		800	400	230	OT400DLUU3AZ	1SCA022549R2430	27
315/570	560/570		1000	400	230	OT630KLUU3AZ	1SCA022549R2510	31
560/1000	1000/1000		1200	800	330	OT1000BLUU3AZ	1SCA022549R2600	66

Compression glands or flanges to be ordered separately.
[1] Knock-outs 10, 12.5, 20.5, 25.5, 32.5, 40.5 mm

Ordering information

Steel sheet enclosed switch-disconnectors, 160...1600 A



OT160EVLUU3BZ



OT200...315KLUU3BZ



OT1250KLUU3BZ



OT200KAUU3BZ



OT400DLUU3BAZ

Enclosed switch-disconnectors with blank cable entries, 3-pole, black handle, IP65

The delivery includes a black pistol handle (I-O/ON-OFF), N- and PE-terminals. The handle includes cover interlock and defeatable interlock function. Delivery with blank cable entries, which are also used for fixing the enclosed switch.

Cable entries from top and bottom

Max. motor output/ AC-23A			Dimensions					
415V	690V	Cable	Height	Width	Depth			Weight /unit
kW/A	kW/A	outlets/side	mm	mm	mm	Type	Order number	kg
Auxiliary contacts included: none • Auxiliary contacts max: 2NO+1NC								
88 / 160	144 / 160	Blank / Blank	400	250	180	OT160EVLUU3BZ[1)]*	1SCA148267R1001	10.4
110 / 200	200 / 200		600	400	230	OT200KLUU3BZ*	1SCA022602R0630	17.0
110 / 250	200 / 250		600	400	230	OT250KLUU3BZ*	1SCA022602R0710	17.0
180 / 315	315 / 315		600	400	230	OT315KLUU3BZ*	1SCA022572R6010	20.0
230 / 400	400 / 400		800	400	230	OT400DLUU3BZ*	1SCA022602R0800	24.0
315 / 570	560 / 570		1000	400	230	OT630KLUU3BZ	1SCA022750R1510	33.0
400 / 720	710 / 720		1000	400	230	OT800KLUU3BZ	1SCA022750R1600	33.0
560 / 1000	1000 / 1000		1200	800	230	OT1000KLUU3BZ	1SCA022750R1780	75.0
710 / 1250	1200 / 1250		1200	800	330	OT1250KLUU3BZ	1SCA022750R1860	92.0
710 / 1250	1200 / 1250		1200	800	330	OT1600KLUU3BZ	1SCA022750R1940	94.0

[1)] OT160EVLUU3BZ includes knock out holes: 10mm, 12.5mm, 20.5mm, 25.5mm, 32.5mm, 40.5mm
* Also available with lockable handle in On-position

Cable entries bottom-bottom

Max. motor output/ AC-23A			Dimensions					
415V	690V	Cable	Height	Width	Depth			Weight /unit
kW/A	kW/A	outlets/side	mm	mm	mm	Type	Order number	kg
Auxiliary contacts included: none • Auxiliary contacts max: 2NO+1NC								
110 / 200	200 / 200	Blank / Blank	600	400	230	OT200KAUU3BZ	1SCA127313R1001	23.0
110 / 250	200 / 250		800	400	230	OT250KAUU3BZ	1SCA127314R1001	27.0

Compression glands or flanges have to be ordered separately.

Enclosed switch-disconnectors with blank cable entries, 3-pole, red-yellow handle, IP65

The delivery includes a red-yellow pistol handle (I-O/ON-OFF), N- and PE-terminals. The handle has cover interlock and defeatable interlock function. Delivery with blank cable entries, which are also used for fixing the enclosed switch.

Cable entries from top and bottom

Max. motor output/ AC-23A			Dimensions					
415V	690V	Cable	Height	Width	Depth			Weight /unit
kW/A	kW/A	outlets/side	mm	mm	mm	Type	Order number	kg
Auxiliary contacts included: none • Auxiliary contacts max: 2NO+1NC								
230 / 400	400 / 400	Blank / Blank	800	400	230	OT400DLUU3BAZ	1SCA140694R1001	26.0
400 / 720	710 / 720		1000	400	230	OT800KLUU3BAZ	1SCA140695R1001	33.0

Compression glands or flanges have to be ordered separately.

Ordering information

Steel sheet enclosed switch-disconnectors, 160...1600 A



OT160EVLRR3TZ, OT200...315KLRR3TZ



OT400DLRR3TZ



OT1000BBRR3TZ



OT160EVAUR3TZ, OT200KAUR3TZ



OT630KBUR3TZ



OT1000BAUR3TZ, OT1250EAUR3TZ

Enclosed switch-disconnectors with auxiliary contact and 'Safety switch' -sticker, with ring-flange cable entries, 3-pole, IP65, black handle

The delivery includes a black pistol type handle (I-O/ON-OFF), PE-terminal and grey enclosure. Fixed cable entry with ring-flange entries. Entry plate fixing profiles are used also for mounting the enclosed switch-disconnector. Auxiliary contacts are wired to the terminal blocks in sizes 200A...800A. Cover interlock and defeatable interlock included.

Cable entries from top and bottom

Max. motor output/ AC-23A		Cable outlets /side	Enclosure dimensions			Cover flanges included [pcs]	Type	Order number	Weight /unit
415V	690V		Height	Width	Depth				
kW/A	kW/A		mm	mm	mm				kg
Knock-outs: 3x10mm, 12.5mm, 20.5mm, 25.5mm, 32.5mm Auxiliary contacts included: 2NO+1NC • Auxiliary contacts max: 2NO+1NC									
80/160	144 / 160	4xring-flange/ 4xring-flange	600	400	230	6	OT160EVLRR3TZ	1SCA148594R1001	19.41
110/200	160 / 200		600	400	230	6	OT200KLRR3TZ	1SCA022340R0770	21
132/250	200 / 250		600	400	230	6	OT250KLRR3TZ	1SCA022340R1150	21
160/315	250 / 315		600	400	230	6	OT315KLRR3TZ	1SCA022340R1580	21
220/400	355 / 400		800	400	230	5	OT400DLRR3TZ	1SCA022340R1910	27
315/570	560 / 570		1000	400	230	4	OT630KLRR3TZ	1SCA022281R6230	31
400/720	710 / 720		1000	400	230	4	OT800ELRR3TZ	1SCA022827R8390	31
560/1000	1000 / 1000	8xring-flange/ 8xring-flange	1200	800	330	10	OT1000BLRR3TZ	1SCA022340R3520	66
560/1000	1000 / 1000		1200	400	330	2	OT1000BBRR3TZ	1SCA022340R3100	63
710/1250	1200 / 1250		1200	800	330	10	OT1250ELRR3TZ	1SCA102773R1001	66

Cable entries from bottom

Max. motor output/ AC-23A		Cable outlets /side	Enclosure dimensions			Cover flanges included [pcs]	Type	Order number	Weight /unit
415V	690V		Height	Width	Depth				
kW/A	kW/A		mm	mm	mm				kg
Knock-outs: 3x10mm, 12.5mm, 20.5mm, 25.5mm, 32.5mm Auxiliary contacts included: 2NO+1NC • Auxiliary contacts max: 2NO+1NC									
88/160	144 / 160	Blank/ 4xring-flange	600	400	230	2	OT160EVAUR3TZ	1SCA147980R1001	21.91
110/200	160 / 200		600	400	230	2	OT200KAUR3TZ	1SCA022281R6820	23
132/250	200 / 250		800	400	230	2	OT250KAUR3TZ	1SCA022281R7040	27
160/315	250 / 315		800	400	230	2	OT315KAUR3TZ	1SCA022281R7210	27
220/400	355 / 400		800	400	230	2	OT400DAUR3TZ	1SCA022281R7470	30
315/570	560 / 570	Blank/8xring-flange	1000	800	230	4	OT630KAUR3TZ	1SCA022281R7630	50
315/570	560 / 570	Blank/4xring-flange	1000	400	330	0	OT630KBUR3TZ	1SCA022340R2710	48
400/720	710 / 720	Blank/ 8xring-flange	1000	800	230	4	OT800EAUR3TZ	1SCA022827R8210	50
560/1000	1000 / 1000		1200	800	330	2	OT1000BAUR3TZ	1SCA022340R3950	73
710/1250	1200 / 1250		1200	800	330	2	OT1250EAUR3TZ	1SCA103273R1001	73

Compression glands or flanges to be ordered separately.

Ordering information

Steel sheet enclosed switch-disconnectors, 160...1600 A



OT160EVLRR3AZ,
OT200...315KLRR3AZ



OT400DLRR3AZ



OT630KLRR3AZ,
OT800ELRR3AZ



OT1000BLRR3AZ,
OT1250ELRR3AZ

Enclosed switch-disconnectors with auxiliary contact and 'Safety switch' -sticker with ring-flange cable entries, 3-pole, IP65, red-yellow handle

The delivery includes a red-yellow pistol handle (I-O/ON-OFF), PE-terminal and grey enclosure. Fixed cable entry with ring-flange entries. Entry plate fixing profiles are used also for mounting the enclosed switch-disconnector. Auxiliary contacts are wired to the terminal blocks in sizes 200A...800A. Cover interlock and defeatable interlock included.

Cable entries from top and bottom

Max. motor output/ AC-23A		Cable	Enclosure dimensions			Cover flanges included	Type	Order number	Weight /unit
415V	690V		Height	Width	Depth				
kW/A	kW/A	openings/side	mm	mm	mm	[pcs]			kg
Knock-outs: 3x10mm, 12.5mm, 20.5mm, 25.5mm, 32.5mm Auxiliary contacts included: 2NO+1NC • Auxiliary contacts max: 2NO+1NC									
80/160	144/160	4xring-flange/ 4xring-flange	600	400	230	6	OT160EVLRR3AZ	1SCA148593R1001	19.41
110/200	160/200		600	400	230	6	OT200KLRR3AZ	1SCA022512R7310	21
132/250	200/250		600	400	230	6	OT250KLRR3AZ	1SCA022512R7490	21
160/315	250/315		600	400	230	6	OT315KLRR3AZ	1SCA022512R7570	21
220/400	355/400		800	400	230	5	OT400DLRR3AZ	1SCA022512R7650	27
315/570	560/570		1000	400	230	4	OT630KLRR3AZ	1SCA022512R7730	31
400/720	710/720		1000	400	230	4	OT800ELRR3AZ	1SCA022828R1180	31
560/ 1000	1000/ 1000		1200	400	330	2	OT1000BBRR3AZ	1SCA102815R1001	63
560/ 1000	1000/ 1000	8xring-flange/ 8xring-flange	1200	800	330	10	OT1000BLRR3AZ	1SCA022512R7810	66
710/ 1250	1200/ 1250		1200	800	330	10	OT1250ELRR3AZ	1SCA102772R1001	66

Compression glands or flanges to be ordered separately.

Ordering information

Steel sheet enclosed switch-disconnectors, 160...1600 A



OT160EVAUR3AZ,
OT200KAUR3AZ



OT250...315KAUR3AZ,
OT400DAUR3AZ



OT1000BAUR3AZ,
OT1250EAUR3AZ

Enclosed switch-disconnectors with auxiliary contact and 'Safety switch' -sticker with ring-flange cable entries, 3-pole, IP65, red-yellow handle

The delivery includes a red-yellow pistol handle (I-O/ON-OFF), PE-terminal and grey enclosure. Fixed cable entry with ring-flange entries. Entry plate fixing profiles are used also for mounting the enclosed switch-disconnector. Auxiliary contacts are wired to the terminal blocks in sizes 200A...800A. Cover interlock and defeatable interlock included.

Cable entries from bottom

Max. motor output/ AC-23A			Enclosure dimensions			Cover flanges included			
415V	690V	Cable	Height	Width	Depth				Weight /unit
kW/A	kW/A	openings/side	mm	mm	mm	[pcs]	Type	Order number	kg
Knock-outs: 3x10mm, 12.5mm, 20.5mm, 25.5mm, 32.5mm Auxiliary contacts included: 2NO+1NC • Auxiliary contacts max: 2NO+1NC									
80/160	144/160	Blank/ 4xring-flange	600	400	230	2	OT160EVAUR3AZ	1SCA147979R1001	21.91
110/200	160/200		600	400	230	2	OT200KAUR3AZ	1SCA022513R1090	23
132/250	200/250		800	400	230	2	OT250KAUR3AZ	1SCA022513R1170	27
160/315	250/315		800	400	230	2	OT315KAUR3AZ	1SCA022513R1250	27
220/400	355/400		800	400	230	2	OT400DAUR3AZ	1SCA022513R1330	30
Knock-outs: 10mm, 12.5mm, 20.5mm, 25.5mm, 32.5mm Auxiliary contacts included: 2NO+1NC • Auxiliary contacts max: 2NO+1NC									
315/570	560/570	Blank/4xring-flange	1000	400	330	0	OT630KBUR3AZ	1SCA022542R6720	48
315/570	560/570	Blank/ 8xring-flange	1000	800	230	4	OT630KAUR3AZ	1SCA022513R1410	50
400/720	710/720		1000	800	230	4	OT800EAUR3AZ	1SCA022828R0020	50
560/ 1000	1000/ 1000		1200	800	330	2	OT1000BAUR3AZ	1SCA022513R1500	73
710/ 1250	1200/ 1250		1200	800	330	2	OT1250EAUR3AZ	1SCA103275R1001	73

Compression glands or flanges to be ordered separately.

Ordering information

Steel sheet enclosed switch-disconnectors, 160...1600 A



OT160EVLCC3TZ,
OT200...315KLCC3TZ



OT400DLCC3TZ



OT630KLCC3TZ,
OT800ELCC3TZ



OT800EBCC3TZ,
OT1000BLCC3TZ,
OT1250ELCC3TZ



OT1000BBCC3TZ

Front operated enclosed switch-disconnectors with auxiliary contact and 'Safety switch' -sticker, with C-flange cable entries, 3-pole, IP65

The delivery includes a black pistol type handle (I-O/ON - OFF indication), PE-terminal, grey enclosure. Fixed cable entries with C-flange entries. Entry plate fixing profiles are used also for mounting the enclosed switch-disconnector. Auxiliary contacts are wired to the terminal blocks in sizes 200A...800A. Cover interlock and defeatable interlock included.

Cable entries from top and bottom

Max. motor output/ AC-23A		Cable outlets	Enclosure dimensions			Cover flanges included	Type	Order number	Weight /unit
415V	690V		Height	Width	Depth				
kW/A	kW/A	/side	mm	mm	mm	[pcs]			kg
Knock-outs: 3x10mm, 12.5mm, 20.5mm, 25.5mm, 32.5mm Auxiliary contacts included: 1NO • Auxiliary contacts max: 2NO+2NC									
88 / 160	144 / 160	2xC-flange / 2xC-flange	600	400	230	0	OT160EVLCC3TZ	1SCA148591R1001	19,4
110 / 200	160 / 200		600	400	230	2	OT200KLCC3TZ	1SCA022281R5420	19,3
132 / 250	200 / 250		600	400	230	2	OT250KLCC3TZ	1SCA022281R5690	19,9
160 / 315	250 / 315		600	400	230	2	OT315KLCC3TZ	1SCA022281R5850	19,9
220 / 400	355 / 400		800	400	230	2	OT400DLCC3TZ	1SCA022281R6070	24,9
315 / 570	560 / 570		1000	400	230	2	OT630KLCC3TZ	1SCA022340R2390	29,4
400 / 720	710 / 720		1000	400	230	0	OT800ELCC3TZ	1SCA022828R0700	29,4
400 / 720	710 / 720	6xC-flange / 6xC-flange	1200	800	330	0	OT800EBCC3TZ	1SCA138016R1001	43,8
560 / 1000	1000 / 1000		1200	800	330	8	OT1000BLCC3TZ	1SCA022340R3790	62,0
560 / 1000	1000 / 1000	3xC-flange / 3xC-flange	1200	400	330	2	OT1000BBCC3TZ	1SCA022340R3360	61,7
710 / 1250	1200 / 1250	6xC-flange / 6xC-flange	1200	800	330	0	OT1250ELCC3TZ	1SCA102769R1001	59,6

Compression glands or flanges to be ordered separately.

Ordering information

Steel sheet enclosed switch-disconnectors, 160...1600 A



OT90GAUC3TZ,
OT125GAUC3TZ



OT160EVAUC3TZ,
OT200KAUC3TZ



OT250KAUC3TZ,
OT315KAUC3TZ,
OT400DAUC3TZ



OT1000BAUC3TZ,
OT1250EAUC3TZ

Front operated enclosed switch-disconnectors with auxiliary contact and 'Safety switch' -sticker, with C-flange cable entries, 3-pole, IP65

The delivery includes a black pistol handle (I-0/ON-OF), PE-terminals and grey enclosure. Fixed cable entries with openings for C-type flanges. Entry plate fixing profiles are used also for mounting the enclosed switch-disconnector. Auxiliary contact are wired to the terminal block in sizes 200A...630A. Cover interlock and defeatable interlock included.

Cable entries from bottom

Max. motor output/ AC-23A		Cable outlets	Enclosure dimensions			Cover flanges included	Type	Order number	Weight /unit
415V	690V		Height	Width	Depth				
kW/A	kW/A	/side	mm	mm	mm	[pcs]			kg
Knock-outs: 10mm, 12.5mm, 20.5mm, 25.5mm, 32.5mm Auxiliary contacts included: 2NO+1NC • Auxiliary contacts max: 2NO+2NC									
88/160	144/160	Blank / 2xC-flange	600	400	230	1	OT160EVAUC3TZ	1SCA147978R1001	21.9
110/200	160/200		600	400	230	1	OT200KAUC3TZ	1SCA022340R0930	21.9
132/250	200/250		800	400	230	1	OT250KAUC3TZ	1SCA022340R1310	25.6
160/315	250/315		800	400	230	1	OT315KAUC3TZ	1SCA022340R1740	25.6
220/400	355/400		800	400	230	1	OT400DAUC3TZ	1SCA022340R2120	28.7
Knock-outs: 2x10mm, 12.5mm, 20.5mm, 25.5mm, 32.5mm Auxiliary contacts included: 2NO+1NC • Auxiliary contacts max: 2NO+2NC									
315/570	560/570	Blank / 4xC-flange	1000	800	230	2	OT630KAUC3TZ	1SCA022340R2550	45.1
400/720	710/720		1000	800	230	2	OT800EAUC3TZ	1SCA022827R9790	45.1
Knock-outs: 2x10mm, 12.5mm, 20.5mm, 25.5mm, 32.5mm Auxiliary contacts included: 2NO+1NC • Auxiliary contacts max: 2NO+2NC									
560/1000	1000/1000	Blank / 6xC-flange	1200	800	330	3	OT1000BAUC3TZ	1SCA022340R4170	69.9
710/1250	1200/1250		1200	800	330	3	OT1250EAUC3TZ	1SCA103274R1001	69.9

Compression glands or flanges to be ordered separately.

Ordering information

Steel sheet enclosed switch-disconnectors, 160...1600 A



OT160EVLCC3AZ,
OT200...315KLCC3AZ



OT400DLCC3AZ



OT1000BLCC3AZ,
OT1250ELCC3AZ



OT160EVAUC3AZ,
OT200KAUC3AZ



OT250KAUC3AZ



OT630KBUC3AZ



OT1000BAUC3AZ,
OT1250EAUC3AZ

Enclosed switch-disconnectors with auxiliary contact and 'Safety switch' -sticker with C-flange cable entries, 3-pole, IP65, red-yellow handle

The delivery includes a red-yellow pistol handle (I-O/ON-OFF), PE-terminal and grey enclosure. Fixed cable entries with C-flange entries. Entry plate fixing profiles are used also for mounting the enclosed switch-disconnector. Auxiliary contacts are wired to the terminal blocks in sizes 200A...800A. Cover interlock and defeatable interlock included.

Cable entries from top and bottom

Max. motor output/ AC-23A			Enclosure dimensions			Cover flanges included			
415V	690V	Cable	Height	Width	Depth				Weight /unit
kW/A	kW/A	openings/side	mm	mm	mm	[pcs]	Type	Order number	kg
Knock-outs: 9.5mm, 10mm, 12.5mm, 20.5mm, 25.5mm Auxiliary contacts included: 2NO+1NC • Auxiliary contacts max: 2NO+1NC									
80/160	144/160	2xC-flange/ 2xC-flange	600	400	230	2	OT160EVLCC3AZ	1SCA148590R1001	19.41
110/200	160/200		600	400	230	2	OT200KLCC3AZ	1SCA022512R6330	21
132/250	200/250		600	400	230	2	OT250KLCC3AZ	1SCA022512R6410	21
160/315	250/315		600	400	230	2	OT315KLCC3AZ	1SCA022512R6500	21
220/400	355/400		800	400	230	2	OT400DLCC3AZ	1SCA022512R6680	27
315/570	560/570		1000	400	230	2	OT630KLCC3AZ	1SCA022512R6760	31
400/720	710/720		1000	400	230	2	OT800ELCC3AZ	1SCA022828R1000	31
560/1000	1000/1000	3xC-flange/3xC-flange	1200	400	330	2	OT1000BBCC3AZ	1SCA022512R6920	63
560/1000	1000/1000	6xC-flange/6xC-flange	1200	800	330	8	OT1000BLCC3AZ	1SCA022512R6840	67
710/1250	1200/1250		1200	800	330	8	OT1250ELCC3AZ	1SCA102768R1001	67

Cable entries from bottom

Max. motor output/ AC-23A			Enclosure dimensions			Cover flanges included			
415V	690V	Cable	Height	Width	Depth				Weight /unit
kW/A	kW/A	openings/side	mm	mm	mm	[pcs]	Type	Order number	kg
Knock-outs: 9.5mm, 10mm, 12.5mm, 20.5mm, 25.5mm Auxiliary contacts included: 2NO+1NC • Auxiliary contacts max: 2NO+1NC									
80/160	144/160	Blank/2xC-flange	600	400	230	1	OT160EVAUC3AZ	1SCA147977R1001	21.91
110/200	160/200		600	400	230	1	OT200KAUC3AZ	1SCA022513R0010	23
132/200	200/250		800	400	230	1	OT250KAUC3AZ	1SCA022513R0100	27
160/315	250/315		800	400	230	1	OT315KAUC3AZ	1SCA022513R0280	27
220/400	355/400		800	400	230	1	OT400DAUC3AZ	1SCA022513R0360	30
Knock-outs: 2x10mm, 12.5mm, 20.5mm, 25.5mm, 32.5mm Auxiliary contacts included: 2NO+1NC • Auxiliary contacts max: 2NO+1NC									
315/570	560/570	Blank/3xC-flange	1000	400	330	1	OT630KBUC3AZ	1SCA022513R0520	48
315/570	560/570	Blank/4xC-flange	1000	800	230	2	OT630KAUC3AZ	1SCA022513R0440	50
400/720	710/720		1000	800	230	2	OT800EAUC3AZ	1SCA022827R9950	50
560/1000	1000/1000	Blank/6xC-flange	1200	800	330	3	OT1000BAUC3AZ	1SCA022513R0610	73
710/1250	1200/1250		1200	800	330	3	OT1250EAUC3AZ	1SCA103279R1001	73

Compression glands or flanges to be ordered separately.

Ordering information

Steel sheet enclosed switch-disconnectors, 160...1600 A



OT125GLCC3BZ,
OT160EVLCC3BZ



OT200...250KLCC3BZ



OT630KLCC3BZ

Enclosed switch-disconnectors with C-flange cable entries, 3-pole, black handle, IP65

The delivery includes a black pistol handle (I-O/ON-OFF), N- and PE-terminals. The handle has cover interlock and defeatable interlock function. The delivery includes C-flange cable plates, which are used also for fixing the enclosed switch-disconnectors. One incoming and one outgoing cables are considered. When more than one cable entry is available, the delivery includes C-flange cover plates.

Cable entries from top and bottom

Max. motor output/ AC-23A		Cable	Dimensions			Cover flanges included [pcs]	Type	Order number	Weight /unit
415V	690V		Height	Width	Depth				
kW/A	kW/A	outlets/side	mm	mm	mm				kg
The cable entry plates contains knock-outs: 10mm, 12.5mm, 20.5mm, 25.5mm, 32.5mm Auxiliary contacts included: none • Auxiliary contacts max: 2NO+1NC									
88 / 160	144 / 160	C-flange / C-flange	400	250	180	0	OT160EVLCC3BZ	1SCA148265R1001	10.4
110 / 200	200 / 200	2xC-flange / 2xC-flange	600	400	230	2	OT200KLCC3BZ	1SCA110114R1001	17.5
110 / 250	200 / 250		600	400	230	2	OT250KLCC3BZ	1SCA110115R1001	17.5
315 / 570	560 / 570		1000	400	230	2	OT630KLCC3BZ	1SCA110121R1001	33.0

Compression glands or flanges to be ordered separately.

Ordering information

Steel sheet enclosed switch-disconnectors, 160...1600 A



OT90...125GAUM3TZ



OT160EVAUM3TZ, OT200KAUM3TZ



OT250...315KAUM3TZ, OT400DAUM3TZ

Enclosed switch-disconnectors with auxiliary contact and 'Safety switch' -sticker for compression type cable glands, 3-pole, IP65, black handle

The delivery includes a black pistol handle (I-0/ON-OF), PE-terminals and grey enclosure. Fixed cable entries with knock outs for compression type glands. Entry plate fixing profiles are used also for mounting the enclosed switch-disconnector. Auxiliary contact are wired to the terminal block in sizes 200A...630A. Cover interlock and defeatable interlock included.

Cable entries from bottom

Max. motor output/ AC-23A		Cable outlets /side	Enclosure dimensions			Type	Order number	Weight /unit
415V	690V		Height	Width	Depth			
kW/A	kW/A		mm	mm	mm			kg
Auxiliary contacts included: 2NO+1NC. • Auxiliary contacts max: 2NO+2NC								
88 / 160	144 / 160	Blank / Knock-outs: 2x63.5mm, 2x50.5mm, 2x40.5mm, 25.5mm, 20.5mm	600	400	230	OT160EVAUM3TZ	1SCA161651R1001	21,9
110 / 200	160 / 200	Blank / Knock-outs: 2x63.5mm, 2x50.5mm, 2x40.5mm, 25.5mm, 20.5mm	600	400	230	OT200KAUM3TZ	1SCA161652R1001	21,9
132 / 250	200 / 250	Blank / Knock-outs: 2x63.5mm, 2x50.5mm, 2x40.5mm, 25.5mm, 20.5mm	800	400	230	OT250KAUM3TZ	1SCA161666R1001	25,6
160 / 315	250 / 315	Blank / Knock-outs: 2x63.5mm, 2x50.5mm, 2x40.5mm, 25.5mm, 20.5mm	800	400	230	OT315KAUM3TZ	1SCA161653R1001	25,6
220 / 400	355 / 400	Blank / Knock-outs: 2x63.5mm, 2x50.5mm, 2x40.5mm, 25.5mm, 20.5mm	800	400	230	OT400DAUM3TZ	1SCA161654R1001	28,7
315 / 570	560 / 570	Blank / Knock-outs: 4x63.5mm, 4x50.5mm, 25.5mm, 20.5mm	1000	800	230	OT630KAUM3TZ	1SCA161655R1001	45,1

Compression glands or flanges to be ordered separately.

Ordering information

Steel sheet enclosed switch-disconnectors, 160...1600 A



OT160EVLUU4BZ



OT200..315KLUU4BZ



OT1250...1600KLUU4BZ

Enclosed switch-disconnectors with blank cable entries, 4-pole, black handle, IP65

The delivery includes a black pistol handle (I-O/ON-OFF), N- and PE-terminals. The handle has cover interlock and defeatable interlock function.

Cable entries from top and bottom

Max. motor output/ AC-23A			Dimensions					
415V	690V	Cable	Height	Width	Depth			Weight /unit
kW/A	kW/A	outlets/side	mm	mm	mm	Type	Order number	kg
Blank cable entries, which are used also for fixing the enclosed switch-disconnectors. Auxiliary contacts included: none • Auxiliary contacts max: 2NO+1NC								
88 / 160	144 / 160	Blank / Blank	400	250	180	OT160EVLUU4BZ[1] *	1SCA148270R1001	10.6
110 / 200	200 / 200		600	400	230	OT200KLUU4BZ*	1SCA022800R5740	17.0
110 / 250	200 / 250		600	400	230	OT250KLUU4BZ*	1SCA022800R7360	17.0
180 / 315	315 / 315		600	400	230	OT315KLUU4BZ*	1SCA022801R0070	20.0
230 / 400	400 / 400		800	400	230	OT400DLUU4BZ*	1SCA022801R0660	24.0
315 / 570	560 / 570		1000	400	230	OT630KLUU4BZ	1SCA022830R4490	31.0
400 / 720	710 / 720		1000	400	230	OT800KLUU4BZ	1SCA022830R4570	31.0
560 / 1000	1000 / 1000		1200	800	230	OT1000KLUU4BZ	1SCA104473R1001	75.0
710 / 1250	1200 / 1250		1200	800	330	OT1250KLUU4BZ	1SCA104455R1001	92.0
710 / 1250	1200 / 1250		1200	800	330	OT1600KLUU4BZ	1SCA104504R1001	96.0

[1] OT160EVLUU4BZ include knock out holes: 10mm, 12.5mm, 20.5mm, 25.5mm, 32.5mm, 40.5mm
* Also available with lockable handle in On-position
Compression glands or flanges to be ordered separately.

Ordering information

Steel sheet enclosed switch-disconnectors, 160...1600 A



OT160EVLRR4TZ,
OT200...315KLRR4TZ



OT400DLRR4TZ



OT200KAUR4TZ,
OT315KAUR4TZ

Enclosed switch-disconnectors with auxiliary contact and 'Safety switch' -sticker with ring-flange cable entries, 4-pole, IP65, black handle

The delivery includes a black pistol handle (I-O/ON-OFF), PE-terminal and grey enclosure. Fixed divided cable entry with ring-flange entries. Entry plate fixing profiles are used also for mounting the enclosed switch-disconnector. Auxiliary contacts are wired to the term inal blocks in sizes 200A...800A. Cover interlock and defeatable interlock included.

Cable entries from top and bottom

Max. motor output/ AC-23A		Cable openings/ side	Enclosure dimensions			Cover flanges included [pcs]	Type	Order number	Weight /unit
415V	690V		Height	Width	Depth				
kW/A	kW/A		mm	mm	mm				kg
Knock-outs: 3x10mm, 12.5mm, 20.5mm, 25.5mm, 32.5mm Auxiliary contacts included: 2NO+1NC • Auxiliary contacts max: 2NO+1NC									
80/160	144/160	4xring-flange/ 4xring-flange	600	400	230	6	OT160EVLRR4TZ	1SCA148599R1001	20.91
110/200	160/200		600	400	230	6	OT200KLRR4TZ	1SCA022461R5410	22
132/250	200/250		600	400	230	6	OT250KLRR4TZ	1SCA022461R5670	22
160/315	250/315		600	400	230	6	OT315KLRR4TZ	1SCA022461R5830	22
220/400	355/400		800	400	230	5	OT400DLRR4TZ	1SCA022461R6050	29
315/570	560/570		1000	400	230	4	OT630KLRR4TZ	1SCA022461R6210	33
400/720	710/720		1000	400	230	4	OT800ELRR4TZ	1SCA022828R1260	33

Cable entries from bottom

Max. motor output/ AC-23A		Cable openings/ side	Enclosure dimensions			Cover flanges included [pcs]	Type	Order number	Weight /unit
415V	690V		Height	Width	Depth				
kW/A	kW/A		mm	mm	mm				kg
Knock-outs: 3x10mm, 12.5mm, 20.5mm, 25.5mm, 32.5mm Auxiliary contacts included: 2NO+1NC • Auxiliary contacts max: 2NO+1NC									
110/200	160/200	Blank/ 4xring-flange	600	400	230	2	OT200KAUR4TZ	1SCA022815R3510	23
110/200	200/250		800	400	230	2	OT250KAUR4TZ	1SCA022717R3910	27
160/315	250/315		600	400	230	2	OT315KAUR4TZ	1SCA022815R5630	22

Compression glands or flanges to be ordered separately.

Ordering information

Steel sheet enclosed switch-disconnectors, 160...1600 A



OT160EVLRR4AZ,
OT200...315KLRR4AZ



OT400DLRR4AZ



OT630KLRR4AZ,
OT800ELRR4AZ



OT200KAUR4AZ



OT250...315KAUR4AZ

Enclosed switch-disconnectors with auxiliary contact and 'Safety switch' -sticker with ring-flange cable entries, 4-pole, IP65, red-yellow handle

The delivery includes a red-yellow pistol type handle (I-O/ON-OFF), PE-terminal and grey enclosure. Fixed cable entry with ring-flange entries. Entry plate fixing profiles are used also for mounting the enclosed switch-disconnector. Auxiliary contacts are wired to the terminal blocks in sizes 200A...800A. Cover interlock and defeatable interlock included.

Cable entries from top and bottom

Max. motor output/ AC-23A		Cable	Enclosure dimensions			Cover flanges included	Type	Order number	Weight /unit
415V	690V		Height	Width	Depth				
kW/A	kW/A	openings/side	mm	mm	mm	[pcs]			kg
Knock-outs: 3x10mm, 12.5mm, 20.5mm, 25.5mm, 32.5mm Auxiliary contacts included: 2NO+1NC • Auxiliary contacts max: 2NO+1NC									
80/160	144/160	4xring-flange/ 4xring-flange	600	400	230	4	OT160EVLRR4AZ	1SCA148598R1001	20.91
110/200	160/200		600	400	230	6	OT200KLRR4AZ	1SCA022542R6990	22
132/250	200/250		600	400	230	6	OT250KLRR4AZ	1SCA022542R7020	22
160/315	250/315		600	400	230	6	OT315KLRR4AZ	1SCA022542R7110	22
220/400	355/400		800	400	230	5	OT400DLRR4AZ	1SCA022542R7290	29
315/570	560/570		1000	400	230	4	OT630KLRR4AZ	1SCA022542R7450	33
400/720	710/720		1000	400	230	4	OT800ELRR4AZ	1SCA022828R1690	33

Cable entries from bottom

Max. motor output/ AC-23A		Cable	Enclosure dimensions			Cover flanges included	Type	Order number	Weight /unit
415V	690V		Height	Width	Depth				
kW/A	kW/A	openings/side	mm	mm	mm	[pcs]			kg
Knock-outs: 3x10mm, 12.5mm, 20.5mm, 25.5mm, 32.5mm Auxiliary contacts included: 2NO+1NC • Auxiliary contacts max: 2NO+1NC									
110/200	160/200	Blank/4xring-flange	600	400	230	2	OT200KAUR4AZ	1SCA022815R9710	23
110/200	200/250		800	400	230	2	OT250KAUR4AZ	1SCA022816R0470	27
160/315	250/315		800	400	230	2	OT315KAUR4AZ	1SCA022816R0980	27

Compression glands or flanges to be ordered separately.

Ordering information

Steel sheet enclosed switch-disconnectors, 160...1600 A



OT160EVLCC4TZ,
OT200...315KLCC4TZ



OT400DLCC4TZ



,
OT800ELCC4TZ



OT200KAUC4TZ,
OT315KAUC4TZ



OT160EVLCC4BZ

Enclosed switch-disconnectors with auxiliary contact and 'Safety switch' -sticker with C-flange cable entries, 4-pole, IP65, black handle

The delivery includes a black pistol handle (I-O/ON-OFF), PE-terminal and grey enclosure. Fixed cable entries with C-flange entries. Entry plate fixing profiles are used also for mounting the enclosed switch-disconnector. Auxiliary contacts are wired to the terminal blocks in sizes 200A...800A. Cover interlock and defeatable interlock included.

Cable entries from top and bottom

Max. motor output/ AC-23A		Cable openings/ side	Enclosure dimensions			Cover flanges included [pcs]	Type	Order number	Weight /unit
415V	690V		Height	Width	Depth				
kW/A	kW/A		mm	mm	mm				kg
Knock-outs: 9.5mm, 10mm, 12.5mm, 20.5mm, 25.5mm Auxiliary contacts included: 1NO+1NC • Auxiliary contacts max: 2NO+2NC									
80/160	144/160	2xC-flange/ 2xC-flange	600	400	230	2	OT160EVLCC4TZ	1SCA148597R1001	20.91
Knock-outs: 9.5mm, 10mm, 12.5mm, 20.5mm, 25.5mm Auxiliary contacts included: 2NO+1NC • Auxiliary contacts max: 2NO+1NC									
110/200	160/200	2xC-flange/ 2xC-flange	600	400	230	2	OT200KLCC4TZ	1SCA022461R5320	22
132/250	200/250		600	400	230	2	OT250KLCC4TZ	1SCA022461R5590	22
160/315	250/315		600	400	230	2	OT315KLCC4TZ	1SCA022461R5750	22
220/400	355/400		800	400	230	2	OT400DLCC4TZ	1SCA022461R5910	29
315/570	560/570		1000	400	230	2	OT630KLCC4TZ	1SCA022461R6130	33
400/720	710/720		1000	400	230	2	OT800ELCC4TZ	1SCA022828R1420	33

Cable entries from bottom

Max. motor output/ AC-23A		Cable openings/ side	Enclosure dimensions			Cover flanges included [pcs]	Type	Order number	Weight /unit
415V	690V		Height	Width	Depth				
kW/A	kW/A		mm	mm	mm				kg
Knock-outs: 10mm, 12.5mm, 20.5mm, 25.5mm, 32.5mm Auxiliary contacts included: 2NO+1NC • Auxiliary contacts max: 2NO+1NC									
110/200	160/200	Blank/ 2xC-flange	600	400	230	1	OT200KAUC4TZ	1SCA022815R9620	25
110/200	200/250		800	400	230	1	OT250KAUC4TZ	1SCA022816R0390	27
160/315	250/315		600	400	230	1	OT315KAUC4TZ	1SCA022815R8060	27

Compression glands or flanges to be ordered separately.

Enclosed switch-disconnectors with C-flange cable entries, 4-pole, black handle, IP65

The delivery includes a black pistol handle (I-O/ON-OFF), N- and PE-terminals. The handle has cover interlock and defeatable interlock function. One incoming and one outgoing cable are considered. When more than one cable entry is available, the delivery includes C-flange cover plates.

Cable entries from top and bottom

Rated current		Cable outlets/side	Dimensions			Type	Order number	Weight /unit
AC-22A	AC-23A		Height	Width	Depth			
415V	415V		mm	mm	mm			kg
C-flange cable entries, which are used also for fixing the enclosed switch-disconnectors. Auxiliary contacts included: none • Auxiliary contacts max: 2NO+1NC								
160	160	C-flange / C-flange	400	250	180	OT160EVLCC4BZ	1SCA148268R1001	10.6

Compression glands or flanges to be ordered separately.

Ordering information

Steel sheet enclosed switch-disconnectors, 160...1600 A



OT160EVLUU6BZ,
OT200KLUU6BZ



OT250...315KLUU6BZ,
OT400DLUU6BZ

Enclosed switch-disconnectors, 6-pole with blank cable entries, black handle, IP65

The delivery includes a black pistol handle (I-O/ON-OFF), N- and PE-terminals. The handle has cover interlock and defeatable interlock function.

Cable entries from top and bottom

Max. motor output/ AC-23A			Dimensions					Weight
415V	690V	Cable	Height	Width	Depth			/unit
kW/A	kW/A	outlets/side	mm	mm	mm	Type	Order number	kg
The delivery includes blank cable entries, which are used also for fixing the enclosed switch-disconnectors. Auxiliary contacts included: none • Auxiliary contacts max: 2NO+2NC								
88 / 160	144 / 160	Blank / Blank	600	800	230	OT160EVLUU6BZ	1SCA148021R1001	37.0
The delivery includes blank cable entries, which are used also for fixing the enclosed switch-disconnectors. Auxiliary contacts included: none • Auxiliary contacts max: 4NO+2NC								
110 / 200	200 / 200	Blank / Blank	600	800	230	OT200KLUU6BZ*	1SCA022802R4610	35.0
110 / 250	200 / 250		800	800	230	OT250KLUU6BZ*	1SCA022802R4530	40.0
180 / 315	315 / 315		800	800	230	OT315KLUU6BZ	1SCA022804R0900	43.0
230 / 400	400 / 400		800	800	230	OT400DLUU6BZ	1SCA022804R1030	43.0
315 / 570	560 / 570		1000	800	230	OT630KLUU6BZ	1SCA022834R1260	52.0
400 / 720	710 / 720		1000	800	230	OT800KLUU6BZ	1SCA022834R1690	52.0

* Also available with lockable handle in On-position

Compression glands or flanges to be ordered separately.



OT200KLUU6AZ



OT250...315KLUU6AZ,
OT400DLUU6AZ

Enclosed switch-disconnectors with auxiliary contact and 'Safety switch' -sticker with blank cable entries, 6-pole, IP65, red-yellow handle

The delivery includes a red-yellow pistol type handle (I-O/ON-OFF), PE-terminal and grey enclosure. Blank cable entries. Auxiliary contacts are wired to the terminal blocks in sizes 200A...800A. Cover interlock and defeatable interlock included.

Cable entries from top and bottom

Max. motor output/ AC-23A			Enclosure dimensions					Weight
415V	690V	Cable	Height	Width	Depth			/unit
kW/A	kW/A	openings/side	mm	mm	mm	Type	Order number	kg
Auxiliary contacts included: 4NO+2NC • Auxiliary contacts max: 4NO+2NC								
110/200	160/200	Blank/Blank	600	800	230	OT200KLUU6AZ	1SCA128193R1001	30
132/250	200/250		800	800	230	OT250KLUU6AZ	1SCA128194R1001	35
160/315	250/315		800	800	230	OT315KLUU6AZ	1SCA128195R1001	35
220/400	355/400		800	800	230	OT400DLUU6AZ	1SCA128196R1001	38
315/570	560/570		1000	800	230	OT630KLUU6AZ	1SCA128197R1001	47
Auxiliary contacts included: 4NO+2NC • Auxiliary contacts max: 4NO+2NC								
400/720	710/720	Blank/Blank	1000	800	230	OT800ELUU6AZ	1SCA128198R1001	48

Compression glands or flanges to be ordered separately.

Ordering information

Steel sheet enclosed switch-disconnectors, 160...1600 A



OT160EVLRR6TZ,
OT160EVTRR6TZ,
OT200KLRR6TZ



OT250..315KLRR6TZ,
OT400DLRR6TZ



OT160EVAUR6TZ,
OT200KAUR6TZ



OT250...315KAUR6TZ,
OT400DAUR6TZ



OT630KAUR6TZ

Enclosed switch-disconnectors with auxiliary contact and 'Safety switch' -sticker with ring-flange cable entries, 6-pole, IP65, black handle

The delivery includes a black pistol handle(I-O/ON-OFF), PE-terminal and grey enclosure. Fixed cable entry with ring-flange entries. Entry plate fixing profiles are used also for mounting the enclosed switch-disconnector. Auxiliary contacts are wired to the terminal blocks in sizes 200A...800A. Cover interlock and defeatable interlock included.

Cable entries from top and bottom

Max. motor output/ AC-23A		Cable openings	Enclosure dimensions			Cover flanges included	Type	Order number	Weight /unit
415V	690V		Height	Width	Depth				
kW/A	kW/A	/side	mm	mm	mm	[pcs]			kg
Knock-outs: 3x10mm, 12.5mm, 20.5mm, 25.5mm, 32.5mm Auxiliary contacts included: 4NO+2NC • Auxiliary contacts max: 4NO+2NC									
80/160	144/160	8xring-flange/ 8xring-flange	600	800	230	12	OT160EVLRR6TZ	1SCA148019R1001	37
80/160	144/160		600	800	230	12	OT160EVTRR6TZ	1SCA148027R1001	37
110/200	160/200		600	800	230	12	OT200KLRR6TZ	1SCA022340R5730	37
132/250	200/250		800	800	230	8	OT250KLRR6TZ	1SCA022338R7490	42
160/315	250/315		800	800	230	8	OT315KLRR6TZ	1SCA022338R7810	42
220/400	355/400		800	800	230	8	OT400DLRR6TZ	1SCA022338R8200	45
315/570	560/570		1000	800	230	8	OT630KLRR6TZ	1SCA022338R8620	54
400/720	710/720		1000	800	230	8	OT800ELRR6TZ	1SCA022827R8470	54

Cable entries from bottom

Max. motor output/ AC-23A		Cable openings	Enclosure dimensions			Cover flanges included	Type	Order number	Weight /unit
415V	690V		Height	Width	Depth				
kW/A	kW/A	/side	mm	mm	mm	[pcs]			kg
Knock-outs: 9.5mm, 10mm, 12.5mm, 20.5mm, 25.5mm, 32.5mm Auxiliary contacts included: 4NO+2NC • Auxiliary contacts max: 4NO+2NC									
80/160	144/160	Blank/ 8xring-flange	600	800	230	4	OT160EVAUR6TZ	1SCA147988R1001	39
110/200	160/200		600	800	230	4	OT200KAUR6TZ	1SCA022339R0010	39
132/250	200/250		800	800	230	4	OT250KAUR6TZ	1SCA022360R2560	45
160/315	250/315		800	800	230	2	OT315KAUR6TZ	1SCA022360R2720	45
220/400	355/400		800	800	230	2	OT400DAUR6TZ	1SCA022360R2990	48
315/570	560/570		1000	800	330	2	OT630KAUR6TZ	1SCA022460R9940	85

Compression glands or flanges to be ordered separately.

Ordering information

Steel sheet enclosed switch-disconnectors, 160...1600 A



OT90...125GLRR6AZ



OT160EVLRR6AZ,
OT200KLRR6AZ



OT250...315KLRR6AZ,
OT400DLRR6AZ



OT630KLRR6AZ,
OT800ELRR6AZ

Enclosed switch-disconnectors with auxiliary contact and 'Safety switch' -sticker with ring-flange cable entries, 6-pole, IP65, red-yellow handle

The delivery includes a red-yellow pistol type handle (I-O/ON-OFF), PE-terminal and grey enclosure. Fixed divided cable entry with ring-flange entries. Entry plate fixing profiles are used also for mounting the enclosed switch-disconnector. Auxiliary contacts are wired to the terminal blocks in sizes 200A...800A. Cover interlock and defeatable interlock included.

Cable entries from top and bottom

Max. motor output/AC-23A		Cable	Enclosure dimensions			Cover flanges included	Type	Order number	Weight /unit
415V	690V		Height	Width	Depth				
kW/A	kW/A	openings/side	mm	mm	mm	[pcs]			kg
Knock-outs: 3x10mm, 12.5mm, 20.5mm, 25.5mm, 32.5mm Auxiliary contacts included: 2NO • Auxiliary contacts max: 2NO+2NC									
45/90	75/90	4xring-flange/ 4xring-flange	400	400	230	4	OT90GLRR6AZ	1SCA148474R1001	16.4
55/125	110/125		400	400	230	4	OT125GLRR6AZ	1SCA148478R1001	16.4
Knock-outs: 3x10mm, 12.5mm, 20.5mm, 25.5mm, 32.5mm Auxiliary contacts included: 2NO+2NC • Auxiliary contacts max: 2NO+2NC									
80/160	144/160	8xring-flange/ 8xring-flange	600	800	230	12	OT160EVLRR6AZ	1SCA148020R1001	37
Knock-outs: 3x10mm, 12.5mm, 20.5mm, 25.5mm, 32.5mm Auxiliary contacts included: 4NO+2NC • Auxiliary contacts max: 4NO+2NC									
110/200	160/200	8xring-flange/ 8xring-flange	600	800	230	12	OT200KLRR6AZ	1SCA022512R9190	37
132/250	200/250		800	800	230	8	OT250KLRR6AZ	1SCA022512R9270	42
160/315	250/315		800	800	230	8	OT315KLRR6AZ	1SCA022512R9350	42
220/400	355/400		800	800	230	8	OT400DLRR6AZ	1SCA022512R9430	45
315/570	560/570		1000	800	230	8	OT630KLRR6AZ	1SCA022512R9510	54
400/720	710/720		1000	800	230	8	OT800ELRR6AZ	1SCA022828R2580	54

Compression glands or flanges to be ordered separately.

Ordering information

Steel sheet enclosed switch-disconnectors, 160...1600 A



OT90...125GAUR6AZ



OT160EVAUR6AZ, OT200KAUR6AZ



OT250...315KAUR6AZ, OT400DAUR6AZ



OT630KAUR6AZ

Enclosed switch-disconnectors with auxiliary contact and 'Safety switch' -sticker with ring-flange cable entries, 6-pole, IP65, red-yellow handle

The delivery includes a red-yellow pistol type handle (I-O/ON-OFF), PE-terminal and grey enclosure. Fixed cable entry with ring-flange entries. Entry plate fixing profiles are used also for mounting the enclosed switch-disconnector. Auxiliary contacts are wired to the terminal blocks in sizes 200A...800A. Cover interlock and defeatable interlock included.

Cable entries from bottom

Max. motor output/ AC-23A			Enclosure dimensions			Cover flanges included			Weight /unit
415V	690V	Cable	Height	Width	Depth		Type	Order number	
kW/A	kW/A	openings/side	mm	mm	mm	[pcs]			kg
Knock-outs: 3x10mm, 12.5mm, 20.5mm, 25.5mm, 32.5mm Auxiliary contacts included: 2NO • Auxiliary contacts max: 2NO+2NC									
45/90	75/90	Blank/4xring-flange	600	400	230	4	OT90GAUR6AZ	1SCA148492R1001	21.31
55/125	110/125		600	400	230	4	OT125GAUR6AZ	1SCA148496R1001	21.31
Knock-outs: 9.5mm, 10mm, 12.5mm, 20.5mm, 25.5mm, 32.5mm Auxiliary contacts included: 4NO+2NC • Auxiliary contacts max: 4NO+2NC									
80/160	144/160	Blank/8xring-flange	600	800	230	4	OT160EVAUR6AZ	1SCA147987R1001	39
110/200	160/200		600	800	230	4	OT200KAUR6AZ	1SCA022542R5590	39
132/250	200/250		800	800	230	4	OT250KAUR6AZ	1SCA022542R5670	45
160/315	250/315		800	800	230	2	OT315KAUR6AZ	1SCA022542R5750	45
220/400	355/400		800	800	230	2	OT400DAUR6AZ	1SCA022542R5830	48
315/570	560/570		1000	800	330	2	OT630KAUR6AZ	1SCA022542R5910	85

Compression glands or flanges to be ordered separately.

Ordering information

Steel sheet enclosed switch-disconnectors, 160...1600 A



OT160EVLCC6TZ,
OT200KLCC6TZ



OT250...315KLCC6TZ,
OT400DLCC6TZ



OT630KLCC6TZ,
OT800ELCC6TZ



OT160EVAUC6TZ,
OT200KAUC6TZ



OT250...315KAUC6TZ,
OT400DAUC6TZ



OT630KAUC6TZ

Enclosed switch-disconnectors with auxiliary contact and 'Safety switch' -sticker with C-flange cable entries, 6-pole, IP65, black handle

The delivery includes a black pistol handle (I-O/ON-OFF), PE-terminal and grey enclosure. Fixed cable entries with C-flange entries. Entry plate fixing profiles are used also for mounting the enclosed switch-disconnector. Auxiliary contacts are wired to the terminal blocks in sizes 200A...800A. Cover interlock and defeatable interlock included.

Cable entries from top and bottom

Max. motor output/ AC-23A		Cable openings/ side	Enclosure dimensions			Cover flanges included	Type	Order number	Weight /unit
415V	690V		Height	Width	Depth				
kW/A	kW/A		mm	mm	mm	[pcs]			kg
Knock-outs: 2x10mm, 12.5mm, 20.5mm, 25.5mm, 32.5mm Auxiliary contacts included: 4NO+2NC • Auxiliary contacts max: 4NO+2NC									
80/160	144/160	4xC-flange/ 4xC-flange	600	800	230	4	OT160EVLCC6TZ	1SCA148017R1001	37
110/200	160/200		600	800	230	4	OT200KLCC6TZ	1SCA022338R7220	37
132/250	200/250		800	800	230	4	OT250KLCC6TZ	1SCA022338R7650	42
160/315	250/315		800	800	230	4	OT315KLCC6TZ	1SCA022338R8030	42
220/400	355/400		800	800	230	4	OT400DLCC6TZ	1SCA022338R8460	45
315/570	560/570		1000	800	230	4	OT630KLCC6TZ	1SCA022338R8890	54
400/720	710/720		1000	800	230	4	OT800ELCC6TZ	1SCA022828R2230	54

Cable entries from bottom

Max. motor output/ AC-23A		Cable openings/ side	Enclosure dimensions			Cover flanges included	Type	Order number	Weight /unit
415V	690V		Height	Width	Depth				
kW/A	kW/A		mm	mm	mm	[pcs]			kg
Knock-outs: 2x10mm, 12.5mm, 20.5mm, 25.5mm, 32.5mm Auxiliary contacts included: 4NO+2NC • Auxiliary contacts max: 4NO+2NC									
80/160	144/160	Blank/4xC-flange	600	800	230	2	OT160EVAUC6TZ	1SCA147986R1001	39
110/200	160/200		600	800	230	2	OT200KAUC6TZ	1SCA022339R0280	39
132/250	200/250		800	800	230	2	OT250KAUC6TZ	1SCA022360R2640	45
160/315	250/315		800	800	230	1	OT315KAUC6TZ	1SCA022360R2810	45
220/400	355/400		800	800	230	1	OT400DAUC6TZ	1SCA022360R3020	48
Knock-outs: 9.5mm, 3x10mm, 12.5mm, 2x20.5mm, 2x25.5mm, 2x32.5mm Auxiliary contacts included: 4NO+2NC • Auxiliary contacts max: 4NO+2NC									
315/570	560/570	Blank/ 6xC-flange	1000	800	330	2	OT630KAUC6TZ	1SCA022460R9860	85

Compression glands or flanges to be ordered separately.

Ordering information

Steel sheet enclosed switch-disconnectors, 160...1600 A



OT90...125GLCC6AZ



OT160EVLCC6AZ,
OT200KLCC6AZ



OT250...315KLCC6AZ,
OT400DLCC6AZ



OT630KLCC6AZ,
OT800ELCC6AZ

Enclosed switch-disconnectors with auxiliary contact and 'Safety switch' -sticker with C-flange cable entries, 6-pole, IP65, red-yellow handle

The delivery includes a red-yellow pistol type handle (I-O/ON-OFF), PE-terminal and grey enclosure. Fixed divided cable entry with C-flange entries. Entry plate fixing profiles are used also for mounting the enclosed switch-disconnector. Auxiliary contacts are wired to the terminal blocks in sizes 200A...800A. Cover interlock and defeatable interlock included.

Cable entries from top and bottom

Max. motor output/ AC-23A			Enclosure dimensions			Cover flanges included			
415V	690V	Cable	Height	Width	Depth				Weight /unit
kW/A	kW/A	openings/side	mm	mm	mm	[pcs]	Type	Order number	kg
Knock-outs: 9.5mm, 10mm, 12.5mm, 20.5mm, 25.5mm Auxiliary contacts included: 2NO+2NC • Auxiliary contacts max: 2NO+2NC									
45/90	75/90	2xC-flange/ 2xC-flange	400	400	230	2	OT90GLCC6AZ	1SCA148472R1001	16.4
Knock-outs: 9.5mm, 10mm, 12.5mm, 20.5mm, 25.5mm Auxiliary contacts included: 1NO+1NC • Auxiliary contacts max: 2NO+2NC									
55/125	110/125	2xC-flange/ 2xC-flange	400	400	230	2	OT125GLCC6AZ	1SCA148476R1001	16.4
Knock-outs: 2x10mm, 12.5mm, 20.5mm, 25.5mm, 32.5mm Auxiliary contacts included: 4NO+2NC • Auxiliary contacts max: 4NO+2NC									
80/160	144/160	4xC-flange/ 4xC-flange	600	800	230	4	OT160EVLCC6AZ	1SCA148018R1001	37
110/200	160/200		600	800	230	4	OT200KLCC6AZ	1SCA022512R8200	37
132/250	200/250		800	800	230	4	OT250KLCC6AZ	1SCA022512R8380	42
160/315	250/315		800	800	230	4	OT315KLCC6AZ	1SCA022512R8460	42
220/400	355/400		800	800	230	4	OT400DLCC6AZ	1SCA022512R8540	45
315/570	560/570		1000	800	230	4	OT630KLCC6AZ	1SCA022512R8620	54
400/720	710/720		1000	800	230	4	OT800ELCC6AZ	1SCA022828R2400	54

Ordering information

Steel sheet enclosed switch-disconnectors, 160...1600 A



OT90...125GAUC6AZ



OT160EVAUC6AZ,
OT200KAUC6AZ



OT250...315KAUC6AZ,
OT400DAUC6AZ



OT630KAUC6AZ

Enclosed switch-disconnectors with auxiliary contact and 'Safety switch' -sticker, with C-flange cable entries, 6-pole, IP65, red-yellow handle

The delivery includes a red-yellow pistol type handle (I-O/ON-OFF), PE-terminal and grey enclosure. Fixed divided cable entry with C-flange entries. Entry plate fixing profiles are used also for mounting the enclosed switch-disconnector. Auxiliary contacts are wired to the terminal blocks in sizes 200A...800A. Cover interlock and defeatable interlock included.

Cable entries from bottom

Max. motor output/AC-23A			Enclosure dimensions			Cover flanges included			Weight /unit
415V	690V	Cable	Height	Width	Depth				
kW/A	kW/A	openings/side	mm	mm	mm	[pcs]	Type	Order number	kg
Knock-outs: 9.5mm, 10mm, 12.5mm, 20.5mm, 25.5mm Auxiliary contacts included: 2NO • Auxiliary contacts max: 2NO+2NC									
45/90	75/90	Blank/2xC-flange	600	400	230	1	OT90GAUC6AZ	1SCA148490R1001	21.31
Knock-outs: 9.5mm, 10mm, 12.5mm, 20.5mm, 25.5mm Auxiliary contacts included: 1NO+1NC • Auxiliary contacts max: 2NO+2NC									
55/125	110/125	Blank/2xC-flange	600	400	230	1	OT125GAUC6AZ	1SCA148494R1001	21.31
Knock-outs: 2x10mm, 12.5mm, 20.5mm, 25.5mm, 32.5mm Auxiliary contacts included: 4NO+2NC • Auxiliary contacts max: 4NO+2NC									
80/160	144/160	Blank/4xC-flange	600	800	230	2	OT160EVAUC6AZ	1SCA147985R1001	39
110/200	160/200		600	800	230	2	OT200KAUC6AZ	1SCA022542R6210	39
132/250	200/250		800	800	230	2	OT250KAUC6AZ	1SCA022542R6300	45
160/315	250/315		800	800	230	1	OT315KAUC6AZ	1SCA022542R6480	45
220/400	355/400		800	800	230	1	OT400DAUC6AZ	1SCA022542R6560	48
Knock-outs: 9.5mm, 3x10mm, 12.5mm, 2x20.5mm, 2x25.5mm, 2x32.5mm Auxiliary contacts included: 4NO+2NC • Auxiliary contacts max: 4NO+2NC									
315/570	560/570	Blank/6xC-flange	1000	800	330	2	OT630KAUC6AZ	1SCA022542R6640	85

Compression glands or flanges to be ordered separately.

Ordering information

Steel sheet enclosed switch-disconnectors, 160...1600 A



OT160EVLCC6BZ

Enclosed switch-disconnectors with C-flange cable entries, 6-pole, black handle, IP65

The delivery includes a black pistol handle (I-O/ON-OFF), N- and PE-terminals. The handle has cover interlock and defeatable interlock function. C-flange cable plates, which are used also for fixing the enclosed switch-disconnectors. One incoming and one outgoing cable are considered. When more than one cable entry is available, the delivery includes C-flange cover plates.

Cable entries from top and bottom

Max. motor output/ AC-23A			Dimensions					
415V	690V	Cable	Height	Width	Depth			Weight /unit
kW/A	kW/A	outlets/side	mm	mm	mm	Type	Order number	kg
Auxiliary contacts included: none • Auxiliary contacts max: 2NO+1NC								
88 / 160	144 / 160	4xC-flange / 4xC-flange	600	800	230	OT160EVLCC6BZ	1SCA148022R1001	37.0

Compression glands or flanges to be ordered separately.

Ordering information

Steel sheet enclosed EMC enclosed switch-disconnectors, 160...1600 A



OT160EVTRR3TZ,
OT200...315KTRR3TZ



OT400DTRR3TZ



OT160EVUUR3TZ,
OT200KUUR3TZ



OT1000BUUR3TZ,
OT1250EUUR3TZ

EMC enclosed switch-disconnectors with auxiliary contact and 'Safety switch' -sticker with ring-flange cable entries, 3-pole, IP65, black handle

The delivery includes a black pistol handle (I-O/ON - OFF indication), grey enclosure. Auxiliary contacts are wired to the terminal blocks in sizes 200A...1250A. PE-terminal. Fixed cable entry with ring-flange entries. Entry plate fixing profiles are used also for mounting the enclosed switch-disconnector. Cover interlock and defeatable interlock included.

Cable entries from top and bottom

Max. motor output/AC-23A			Enclosure dimensions			Cover flanges included			
415V	690V	Cable	Height	Width	Depth				Weight /unit
kW/A	kW/A	openings/side	mm	mm	mm	[pcs]	Type	Order number	kg
Knock-outs: 3x10mm, 12.5mm, 20.5mm, 25.5mm, 32.5mm Auxiliary contacts included: 2NO+1NC • Auxiliary contacts max: 2NO+1NC									
80/160	144/160	4xring-flange/ 4xring-flange	600	400	230	6	OT160EVTRR3TZ	1SCA148596R1001	19.91
110/200	160/200		600	400	230	6	OT200KTRR3TZ	1SCA022513R7450	21
132/250	200/250		600	400	230	6	OT250KTRR3TZ	1SCA022513R7530	21
160/315	250/315		600	400	230	6	OT315KTRR3TZ	1SCA022513R7610	21
220/400	355/400		800	400	230	5	OT400DTRR3TZ	1SCA022513R7700	27
315/570	560/570		1000	400	230	4	OT630KTRR3TZ	1SCA022513R7880	31
400/720	710/720		1000	400	230	4	OT800ETRR3TZ	1SCA022828R1770	31
560/ 1000	1000/ 1000	8xring-flange/ 8xring-flange	1200	800	330	10	OT1000BTRR3TZ	1SCA022513R7960	66
710/ 1250	1200/ 1250		1200	800	330	10	OT1250ETRR3TZ	1SCA103280R1001	66

Cable entries from bottom

Max. motor output/AC-23A			Enclosure dimensions			Cover flanges included			
415V	690V	Cable	Height	Width	Depth				Weight /unit
kW/A	kW/A	openings/side	mm	mm	mm	[pcs]	Type	Order number	kg
Knock-outs: 3x10mm, 12.5mm, 20.5mm, 25.5mm, 32.5mm Auxiliary contacts included: 2NO+1NC • Auxiliary contacts max: 2NO+1NC									
80/160	144/160	Blank/4xring-flange	600	400	230	2	OT160EVUUR3TZ	1SCA147982R1001	21.91
110/200	160/200		600	400	230	2	OT200KUUR3TZ	1SCA022513R8340	23
132/250	200/250		800	400	230	2	OT250KUUR3TZ	1SCA022513R8420	27
160/315	250/315		800	400	230	2	OT315KUUR3TZ	1SCA022513R8510	27
220/400	355/400		800	400	230	2	OT400DUUR3TZ	1SCA022513R8690	30
Knock-outs: 9.5mm, 10mm, 12.5mm, 20.5mm, 25.5mm, 32.5mm Auxiliary contacts included: 2NO+1NC • Auxiliary contacts max: 2NO+1NC									
315/570	560/570	Blank/8xring-flange	1000	800	230	4	OT630KUUR3TZ	1SCA022513R8770	50
400/720	710/720	Blank/Blank	1000	800	230		OT800EUUU3TZ	1SCA129519R1001	50
400/720	710/720	Blank/8xring-flange	1000	800	230	4	OT800EUUR3TZ	1SCA022828R0110	50
560/ 1000	1000/ 1000		1200	800	330	2	OT1000BUUR3TZ	1SCA022513R8850	73
710/ 1250	1200/ 1250		1200	800	330	2	OT1250EUUR3TZ	1SCA103281R1001	73

Compression glands have to be ordered separately.
The cables should be shielded to obtain proper EMC protection.

Ordering information

Steel sheet enclosed EMC enclosed switch-disconnectors



OT160EVTRR3AZ,
OT200...315KTRR3AZ



OT400DTRR3AZ



OT630KTRR3AZ,
OT800ETRR3AZ



OT1000BTRR3AZ,
OT1250ETRR3AZ

EMC enclosed switch-disconnectors with auxiliary contact and 'Safety switch' -sticker with ring-flange cable entries, 3-pole, IP65, red-yellow handle

The delivery includes a red-yellow pistol handle (I-O/ON - OFF indication), grey enclosure. Auxiliary contacts according to the table below. PE-terminal. Fixed cable entry with ring-flange entries. Entry plate fixing profiles are used also for mounting the enclosed switch-disconnector. Cover interlock and defeatable interlock included.

Cable entries from top and bottom

Max. motor output/ AC-23A		Cable openings/ side	Enclosure dimensions			Cover flanges included [pcs]	Type	Order number	Weight /unit
415V	690V		Height	Width	Depth				
kW/A	kW/A		mm	mm	mm				kg
Knock-outs: 3x10mm, 12.5mm, 20.5mm, 25.5mm, 32.5mm Auxiliary contacts included: 2NO+1NC • Auxiliary contacts max: 2NO+1NC									
80/160	144/160	4xring-flange/ 4xring-flange	600	400	230	6	OT160EVTRR3AZ	1SCA148595R1001	19.9
110/200	160/200		600	400	230	6	OT200KTRR3AZ	1SCA022742R3450	21
132/250	200/250		600	400	230	6	OT250KTRR3AZ	1SCA022742R3530	21
160/315	250/315		600	400	230	6	OT315KTRR3AZ	1SCA022742R3610	21
220/400	355/400		800	400	230	5	OT400DTRR3AZ	1SCA022742R3700	27
315/570	560/570		1000	400	230	4	OT630KTRR3AZ	1SCA022742R3880	31
400/720	710/720		1000	400	230	4	OT800ETRR3AZ	1SCA022828R2070	31
560/1000	1000/1000	8xring-flange/ 8xring-flange	1200	800	330	10	OT1000BTRR3AZ	1SCA102749R1001	66
710/1250	1200/1250		1200	800	330	10	OT1250ETRR3AZ	1SCA103282R1001	66

Ring-flanges have to be ordered separately.
The ordering information for ring-flanges, see Accessories for EMC enclosed switch-disconnectors.
The cables should be shielded to obtain proper EMC protection.

Ordering information

Steel sheet enclosed EMC enclosed switch-disconnectors, 160...1250 A



OT160EVUUR3AZ,
OT200KUUR3AZ



OT250...315KUUR3AZ,
OT400DUUR3AZ



OT1000BUUR3AZ,
OT1250EUUR3AZ

EMC enclosed switch-disconnectors with auxiliary contact and 'Safety switch' -sticker with ring-flange cable entries, 3-pole, IP65, red-yellow handle

The delivery includes a red-yellow pistol handle (I-O/ON - OFF indication), grey enclosure. Auxiliary contacts according to the table below. PE-terminal. Fixed cable entry with ring-flange entries. Entry plate fixing profiles are used also for mounting the enclosed switch-disconnector. Cover interlock and defeatable interlock included.

Cable entries from bottom

Max. motor output/ AC-23A			Enclosure dimensions			Cover flanges included			Weight /unit
415V	690V	Cable	Height	Width	Depth				
kW/A	kW/A	openings/side	mm	mm	mm	[pcs]	Type	Order number	kg
Knock-outs: 3x10mm, 12.5mm, 20.5mm, 25.5mm, 32.5mm Auxiliary contacts included: 2NO+1NC • Auxiliary contacts max: 2NO+1NC									
80/160	144/160	Blank/4xring-flange	600	400	230	2	OT160EVUUR3AZ	1SCA147981R1001	21.9
110/200	160/200		600	400	230	2	OT200KUUR3AZ	1SCA022700R6340	23
132/250	200/250		800	400	230	2	OT250KUUR3AZ	1SCA022725R3190	27
160/315	250/315		800	400	230	2	OT315KUUR3AZ	1SCA022725R2890	27
220/400	355/400		800	400	230	2	OT400DUUR3AZ	1SCA022700R6420	30
Knock-outs: 9.5mm, 10mm, 12.5mm, 20.5mm, 25.5mm, 32.5mm Auxiliary contacts included: 2NO+1NC • Auxiliary contacts max: 2NO+1NC									
315/570	560/570	Blank/8xring-flange	1000	800	230	4	OT630KUUR3AZ	1SCA022725R2970	50
400/720	710/720		1000	800	230	4	OT800EUUR3AZ	1SCA022828R0450	50
Knock-outs: 3x10mm, 12.5mm, 20.5mm, 25.5mm, 32.5mm Auxiliary contacts included: 2NO+1NC • Auxiliary contacts max: 2NO+1NC									
560/ 1000	1000/ 1000	Blank/8xring-flange	1200	800	330	2	OT1000BUUR3AZ	1SCA022725R3010	73
710/ 1250	1200/ 1250		1200	800	330	2	OT1250EUUR3AZ	1SCA103283R1001	73

Ring-flanges have to be ordered separately.
The ordering information for ring-flanges, see Accessories for EMC enclosed switch-disconnectors.
The cables should be shielded to obtain proper EMC protection.

Ordering information

Steel sheet enclosed EMC enclosed switch-disconnectors, 160...1250 A



OT160EVTRR6TZ,
OT200KTRR6TZ



OT250...315KTRR6TZ,
OT400DTRR6TZ



OT200KUUR6TZ



OT250...315KUUR6TZ
OT400DUUR6TZ



OT630KUUR6TZ

EMC enclosed switch-disconnectors with auxiliary contact and 'Safety switch' -sticker with ring-flange cable entries, 6-pole, IP65, black handle

The delivery includes a black pistol handle (I-O/ON-OFF) and PE-terminal. Auxiliary contacts are wired to the terminal blocks in sizes 200A...720A. Fixed cable entries with ring-flange entries. Entry plate fixing profiles are used also for mounting the enclosed switch-disconnector. Cover interlock and defeatable interlock included.

Cable entries from top and bottom

Max. motor output/AC-23A			Enclosure dimensions			Cover flanges included			Weight /unit
415V	690V	Cable	Height	Width	Depth				
kW/A	kW/A	openings/side	mm	mm	mm	[pcs]	Type	Order number	kg
Knock-outs: 3x10mm, 12.5mm, 20.5mm, 25.5mm, 32.5mm Auxiliary contacts included: 2NO • Auxiliary contacts max: 2NO+2NC									
80/160	144/160	8xring-flange/ 8xring-flange	600	800	230	12	OT160EVTRR6TZ	1SCA148027R1001	37
110/200	160/200		600	800	230	12	OT200KTRR6TZ	1SCA022545R7440	37
132/250	200/250		800	800	230	8	OT250KTRR6TZ	1SCA022545R7520	42
160/315	250/315		800	800	230	8	OT315KTRR6TZ	1SCA022545R7610	42
220/400	355/400		800	800	230	8	OT400DTRR6TZ	1SCA022545R7790	45
315/570	560/570		1000	800	230	8	OT630KTRR6TZ	1SCA022545R7870	54
400/720	710/720		1000	800	230	8	OT800ETRR6TZ	1SCA022828R2660	54

Cable entries from bottom

Max. motor output/AC-23A			Enclosure dimensions			Cover flanges included			Weight /unit
415V	690V	Cable	Height	Width	Depth				
kW/A	kW/A	openings/side	mm	mm	mm	[pcs]	Type	Order number	kg
Knock-outs: 10mm, 12.5mm, 20.5mm, 25.5mm, 32.5mm Auxiliary contacts included: 4NO+2NC • Auxiliary contacts max: 4NO+2NC									
110/200	160/200	Blank/8xring-flange	600	800	230	4	OT200KUUR6TZ	1SCA022625R3730	37
Knock-outs: 9.5mm, 10mm, 12.5mm, 20.5mm, 25.5mm, 32.5mm Auxiliary contacts included: 4NO+2NC • Auxiliary contacts max: 4NO+2NC									
132/250	200/250	Blank/8xring-flange	800	800	230	4	OT250KUUR6TZ	1SCA022806R6610	45
160/315	250/315		800	800	230	2	OT315KUUR6TZ	1SCA022805R3040	42
220/400	355/400		800	800	230	2	OT400DUUR6TZ	1SCA022805R3800	48
315/570	560/570		1000	800	330	2	OT630KUUR6TZ	1SCA022842R9600	85

Ring-flanges have to be ordered separately.
The ordering information for ring-flanges, see Accessories for EMC enclosed switch-disconnectors.
The cables should be shielded to obtain proper EMC protection.

Ordering information

Steel sheet enclosed EMC enclosed switch-disconnectors, 160...1250 A



OT200KTRR6AZ



OT250...315KTRR6AZ



OT630KTRR6AZ
OT800ETRR6AZ

EMC switch-disconnectors with auxiliary contact and 'Safety switch' -sticker with ring-flange cable entries, 6-pole, IP65, red-yellow handle

The delivery includes a red-yellow handle (I-O/ON-OFF) and PE-terminal. Auxiliary contacts are wired to the terminal blocks in sizes 200A...720A. Fixed cable entries with ring-flange entries. Entry plate fixing profiles are used also for mounting the enclosed switch-disconnector. Cover interlock and defeatable interlock included.

Cable entries from top and bottom

Max. motor output/AC-23A			Enclosure dimensions						Weight
415V	690V	Cable	Height	Width	Depth	Cover flanges included			/unit
kW/A	kW/A	openings/side	mm	mm	mm	[pcs]	Type	Order number	kg
Auxiliary contacts included: 4NO+2NC • Auxiliary contacts max: 4NO+2NC									
80/160	144/160	8xring-flange/ 8xring-flange	600	800	230	12	OT160EVTRR6AZ	1SCA148028R1001	37
110/200	160/200		600	800	230	12	OT200KTRR6AZ	1SCA022742R4340	37
132/250	200/250		800	800	230	8	OT250KTRR6AZ	1SCA022742R4420	42
160/315	250/315		800	800	230	8	OT315KTRR6AZ	1SCA022742R4510	42
220/400	355/400		800	800	230	8	OT400DTRR6AZ	1SCA022742R4690	45
315/570	560/570		1000	800	230	8	OT630KTRR6AZ	1SCA022742R4770	48
400/720	710/720		1000	800	230	8	OT800ETRR6AZ	1SCA022828R2820	50

Cable entries from bottom

Max. motor output/AC-23A			Enclosure dimensions						Weight
415V	690V	Cable	Height	Width	Depth	Cover flanges included			/unit
kW/A	kW/A	openings/side	mm	mm	mm	[pcs]	Type	Order number	kg
Knock-outs: 3x10mm, 12.5mm, 20.5mm, 25.5mm, 32.5mm Auxiliary contacts included: 4NO+2NC • Auxiliary contacts max: 4NO+2NC									
110/200	160/200	Blank/ 8xring-flange	600	800	230	4	OT200KUUR6AZ	1SCA022801R7410	37
110/250	200/250		800	800	230	4	OT250KUUR6AZ	1SCA022801R7590	45
160/315	250/315		800	800	230	2	OT315KUUR6AZ	1SCA022805R3120	42
220/400	355/400		800	800	230	2	OT400DUUR6AZ	1SCA022805R3980	48
315/570	560/570		1000	800	330	2	OT630KUUR6AZ	1SCA022842R9780	85

Ring-flanges have to be ordered separately.
The ordering information for ring-flanges, see Accessories for EMC enclosed switch-disconnectors.
The cables should be shielded to obtain proper EMC protection.

Type key

Acid-proof enclosed switch-disconnectors, 160...1250 A

Acid-proof / Stainless steel enclosed switch-disconnectors, type OT_

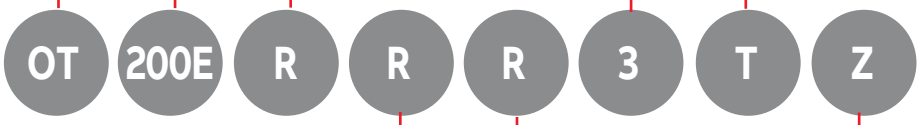

Acid-proof enclosure, cable entry	
Cable entry Top/Bottom	**R**
Cable entry Bottom/Bottom	**S**

Enclosed switch-disconnector	
Enclosed switch-disconnector with auxiliary contact and 'Safety switch' sticker, black handle	**T**
Enclosed switch-disconnector with auxiliary contact and 'Safety switch' sticker, red/yellow handle	**A**
Enclosed switch-disconnector without auxiliary contact, black handle	**B**
Enclosed switch-disconnector without auxiliary contact, red/yellow handle	**BA**

IP class	
IP65	**Z**

Upper end configuration for the enclosure	
Space for B-flange	**B**
Space for C-flange	**C**
Space for ring flange	**R**
Space for M glands	**M**
Closed ends	**U**

Lower end configuration for the enclosure	
Space for B-flange	**B**
Space for C-flange	**C**
Space for ring flange	**R**
Space for M glands	**M**
Closed ends	**U**

Ordering information

Acid-proof enclosed switch-disconnectors, 160...1250 A



OT160EVRRR3TZ,
OT200...315ERR3TZ



OT400ERRR3TZ



OT630...800ERRR3TZ



OT250...400ESUR3TZ



OT1000...1250ESUR3TZ

Enclosed switch-disconnectors with auxiliary contact and 'Safety switch' -sticker, 3-pole, IP65, stainless steel handle

The delivery includes a stainless steel handle (I-O/ON-OFF), auxiliary contacts according to the table below and PE-terminal. Knock-out type cable entry for control cable (25 mm) and open type cable entries for main cables. Equipped with hinges and lock. Auxiliary contacts are wired to the terminal blocks in sizes 200A...800A. Cover interlock and defeatable interlock included. Cable flanges (KOT61007 or KOT62296 (for EMC)) and flange covers (KOT61008) to be ordered separately. The products are EMC approved.

Cable entries from top and bottom

Max. motor output/AC-23A			Enclosure dimensions			Cover flanges included			
415V	690V	Cable	Height	Width	Depth				Weight /unit
kW/A	kW/A	openings/side	mm	mm	mm	[pcs]	Type	Order number	kg
Selector handle									
Auxiliary contacts included: 2NO+1NC • Auxiliary contacts max: 2NO+1NC									
80/160	144/160	4xring-flange+ø25mm/ 4xring-flange+ø25mm	600	400	230	0	OT160EVRRR3TZ	1SCA125630R1001	25
110/200	160/200		600	400	230	0	OT200ERRR3TZ	1SCA101252R1001	25
110/200	200/250		600	400	230	0	OT250ERRR3TZ	1SCA102364R1001	25
160/315	250/315		600	400	230	0	OT315ERRR3TZ	1SCA102332R1001	25
220/400	355/400		800	400	230	0	OT400ERRR3TZ	1SCA102318R1001	32
315/570	560/570		1000	400	230	0	OT630ERRR3TZ	1SCA102321R1001	36
400/720	710/720		1000	400	230	0	OT800ERRR3TZ	1SCA102333R1001	36
560/ 1000	1000/ 1000	8xring-flange+ø25.5/ 8xring-flange+ø25.5	1200	800	330	0	OT1000ERRR3TZ	1SCA103329R1001	70
710/ 1250	1200/ 1250		1200	800	330	0	OT1250ERRR3TZ	1SCA103351R1001	70

Cable entries from bottom

Max. motor output/AC-23A			Enclosure dimensions			Cover flanges included			
415V	690V	Cable	Height	Width	Depth				Weight /unit
kW/A	kW/A	openings/side	mm	mm	mm	[pcs]	Type	Order number	kg
Pistol handle									
Flange covers mounted on top Knock-outs: 25.5mm Auxiliary contacts included: 2NO+1NC • Auxiliary contacts max: 2NO+1NC									
80/160	144/160	Blank/ 4xring-flange+ø25.5	600	400	230	0	OT160EVSUR3TZ	1SCA125726R1001	28
110/200	160/200		600	400	230	0	OT200ESUR3TZ	1SCA102325R1001	28
132/200	200/250		800	400	230	0	OT250ESUR3TZ	1SCA102320R1001	33
160/315	250/315		800	400	230	0	OT315ESUR3TZ	1SCA102317R1001	34
220/400	355/400		800	400	230	0	OT400ESUR3TZ	1SCA102323R1001	34
315/570	560/570	Blank/ 8xring-flange+ø25.5	1000	800	330	0	OT630ESUR3TZ	1SCA102336R1001	56
400/720	710/720		1000	800	330	0	OT800ESUR3TZ	1SCA102324R1001	56
560/ 1000	1000/ 1000		1200	800	330	0	OT1000ESUR3TZ	1SCA104434R1001	78
710/ 1250	1200/ 1250		1200	800	330	0	OT1250ESUR3TZ	1SCA104440R1001	78

Compression glands or flanges to be ordered separately.

Ordering information

Acid-proof enclosed switch-disconnectors, 160...1250 A



OT160EVRRR6TZ,
OT200...400ERRR6TZ

Enclosed switch-disconnectors with auxiliary contact and 'Safety switch' -sticker, 6-pole, IP65, stainless steel handle

The delivery includes a stainless steel pistol handle (I-O/ON-OFF), auxiliary contacts according to the table below and PE-terminal. Knock-out type cable entry for control cable (25 mm) and open type cable entries for main cables. Equipped with hinges and lock. Auxiliary contacts are wired to the terminal blocks in sizes 200A...800A. Cover interlock and defeatable interlock included. Cable flanges (KOT61007 or KOT62296 (for EMC)) and flange covers (KOT61008) to be ordered separately. The products are EMC approved.

Cable entries from top and bottom

Max. motor output/AC-23A			Enclosure dimensions			Cover flanges included			
415V	690V	Cable	Height	Width	Depth				Weight /unit
kW/A	kW/A	openings/side	mm	mm	mm	[pcs]	Type	Order number	kg
Auxiliary contacts included: 4NO+2NC • Auxiliary contacts max: 4NO+2NC									
80/160	144/160	8xring-flange+ø25.5/ 8xring-flange+ø25.5	800	800	230	0	OT160EVRRR6TZ	1SCA125725R1001	41
110/200	160/200		800	800	230	0	OT200ERRR6TZ	1SCA102316R1001	41
132/200	200/250		800	800	230	0	OT250ERRR6TZ	1SCA102365R1001	46
160/315	250/315		800	800	230	0	OT315ERRR6TZ	1SCA102327R1001	46
220/400	355/400		800	800	230	0	OT400ERRR6TZ	1SCA102329R1001	50
315/570	560/570		1000	800	230	0	OT630ERRR6TZ	1SCA102326R1001	59
400/720	710/720		1000	800	230	0	OT800ERRR6TZ	1SCA102334R1001	59

Cable entries from bottom

Max. motor output/AC-23A			Enclosure dimensions			Cover flanges included			
415V	690V	Cable	Height	Width	Depth				Weight /unit
kW/A	kW/A	openings/side	mm	mm	mm	[pcs]	Type	Order number	kg
Flange covers mounted on top Knock-outs: 25.5mm Auxiliary contacts included: 4NO+2NC • Auxiliary contacts max: 4NO+2NC									
80/160	144/160	Blank/ 8xring-flange+ø25.5	800	800	230	0	OT160EVSUR6TZ	1SCA125650R1001	43
110/200	160/200		800	800	230	0	OT200ESUR6TZ	1SCA102319R1001	43
132/200	200/250		800	800	230	0	OT250ESUR6TZ	1SCA102370R1001	51
160/315	250/315		800	800	230	0	OT315ESUR6TZ	1SCA102330R1001	51
220/400	355/400		800	800	230	0	OT400ESUR6TZ	1SCA102335R1001	54
315/570	560/570		1000	800	330	0	OT630ESUR6TZ	1SCA102322R1001	60

Compression glands or flanges to be ordered separately.

Ordering Information

Aluminium enclosed switch-disconnectors, 160...600 A

Type keys

Aluminium enclosed switch-disconnectors, types OTA_ and OKA_

Main type	
Aluminium enclosed switch-disconnectors with auxiliary contact and 'Safety switch' -sticker	**OTA**

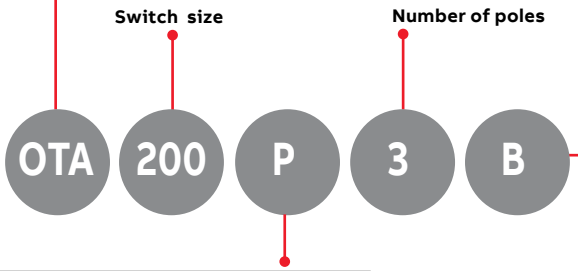

Handle type	
Selector handle	**S**
Pistol handle	**P**

Handle colour, construction	
Black handle, cable entries from top and bottom	**G**
Red-yellow handle	**Y**
Black handle, cable entries from bottom	**B**

Ordering information

Aluminium enclosed switch-disconnectors, 160...600 A



OTA160P3B



OTA200...400P3B



OTA600P3B



OTA125...160P3Y



OTA200...400P3Y



OTA600P3Y

Front operated enclosed switch-disconnectors with auxiliary contact and 'Safety switch' -sticker, 3-pole, IP65

Safety switch including N- and PE-terminals. Two (160A) or four (200-600A) cable glands included. Padlockable black color pistol type handle with interlock and defeatable interlocking function. 1NO and 1NC auxiliary contacts included in 160A switches. 2NO and 2NC auxiliary contacts included in 200A to 600A switches. These products are EMC compatible with existing cable glands.

Cable entries from bottom

Max. motor output/ AC-23A			Enclosure dimensions					
415V	690V	Cable	Height	Width	Depth			Weight /unit
kW/A	kW/A	openings/side	mm	mm	mm	Type	Order number	kg
Black pistol handle, grey enclosure								
Auxiliary contacts included: 1NO+1NC • Auxiliary contacts max: 2NO+2NC								
75/135	75/80	2x24...48+2xM20	586	425	196	OTA160P3B	1SCA142585R1001	20.2
Auxiliary contacts included: 2NO • Auxiliary contacts max: 2NO+2NC								
110/200	160/200	Blank/4x28...68+2xM20	682	485	208	OTA200P3B	1SCA142587R1001	29.3
132/250	200/250		682	485	208	OTA250P3B	1SCA142589R1001	29.3
160/315	250/315		682	485	208	OTA315P3B	1SCA142591R1001	29.3
220/400	355/400		682	485	208	OTA400P3B	1SCA142593R1001	29.3
315/540	560/551		819	585	251	OTA600P3B	1SCA144287R1001	36.3
Red-yellow pistol handle, grey enclosure								
Auxiliary contacts included: 1NO+1NC • Auxiliary contacts max: 2NO+2NC								
75/135	75/80	2x24...48+2xM20	586	425	196	OTA160P3Y	1SCA142586R1001	20.2
Auxiliary contacts included: 2NO+2NC • Auxiliary contacts max: 2NO+2NC								
110/200	160/200	Blank/4x28...68+2xM20	682	485	208	OTA200P3Y	1SCA142588R1001	29.3
132/250	200/250		682	485	208	OTA250P3Y	1SCA142590R1001	29.3
160/315	250/315		682	485	208	OTA315P3Y	1SCA142592R1001	29.3
220/400	355/400		682	485	208	OTA400P3Y	1SCA142594R1001	29.3
315/540	560/551		819	585	251	OTA600P3Y	1SCA144288R1001	36.3

Compression glands or flanges to be ordered separately.

Dimension drawings

Plastic enclosed switch-disconnectors

OT160...1000_

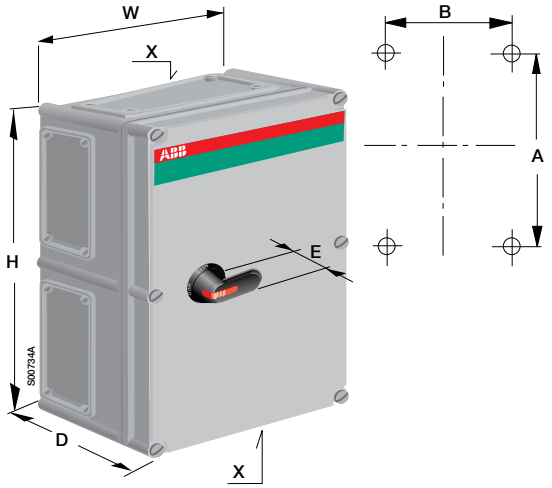

Fixing entry size in enclosure ø 7

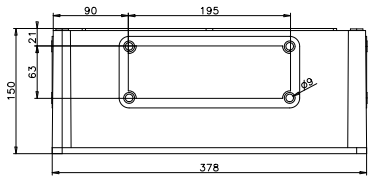

With auxciliary contacts and 'Satety switch'-sticker types	
OT160E_3_, 4_	Flange II
OT160E_6_	
OT200K_3_, 4_	
OT250K_3_, 4_	
OT315K_3_, 4_	
OT400D_3_, 4_	
Plastic enclosed switch-disconnectors types	
OT160...800	Flange II

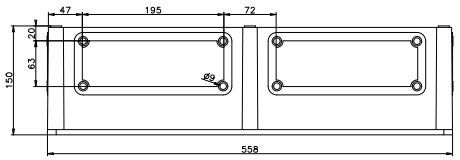

With auxciliary contacts and 'Satety switch'-sticker types	
OT200K_6_	Flange 2xII
OT250K_6_	
OT315K_6_	
OT400D_3_	
OT400D_6_	
OT630K_3_	
OT1000B_3_	
Plastic enclosed switch-disconnectors types	
OT200...400	Flange 2xII

Plastic enclosed switch-disconnectors with auxiliary contact and 'Safety switch' -sticker

Type	Size				Cable entry	Fixing dimensions	
	H	W	D	E	X	A	B
3-pole and 4-pole							
OT160E_3_	560	280	180	45	I I	535	255
OT160E_4_	560	380	180	45	I I	535	355
OT200K_3_	560	280	130	45	I I	535	255
OT200K_3_, 4_	560	380	180	45	I I	535	355
OT250K_3_	560	280	130	45	I I	535	255
OT250K_3_, 4_	560	380	130	45	I I	535	355
OT315K_3_, 4_	560	380	180	45	I I	535	355
OT400D_3_, 4_	840	380	180	45	I I	815	355
OT400D_3_	760	560	250	45	2 x I I	735	535
OT630K_3_	760	560	250	45	2 x I I	735	535
OT1000B_3_	760	560	250	45	2 x I I	735	535
6-pole							
OT160E_6_	760	560	250	45	I I	735	535
OT200K_6_	760	560	250	45	2 x I I	735	535
OT250K_6_	760	560	250	45	2 x I I	735	535
OT315K_6_	760	560	250	45	2 x I I	735	535
OT400D_6_	760	560	250	45	2 x I I	735	535

Plastic enclosed switch-disconnectors

Type	Size				Cable entry	Fixing dimensions	
	H	W	D	E	X	A	B
3- and 4-pole							
OT160E_3_, 4_	380	280	130	45	II	355	255
OT200K_3_, 4_	560	380	180	45	II	535	355
OT250K_3_, 4_	560	380	180	45	II	535	355
OT315K_3_, 4_	560	380	180	45	II	535	355
OT400D_3_, 4_	840	380	180	45	II	815	355
OT630K_3_, 4_	760	560	250	45	II	815	355
OT800K_3_, 4_	760	560	250	45	II	815	355
6-pole							
OT200K_6_	760	560	250	45	2 x II	735	535
OT250K_6_	760	560	250	45	2 x II	735	535
OT315K_6_	760	560	250	45	2 x II	735	535
OT400D_6_	760	560	250	45	2 x II	735	535

Dimension drawings

Steel sheet enclosed switch-disconnectors

Steel sheet enclosed switch-disconnectors with auxiliary contact and 'Safety switch' -sticker, OT160...1250_

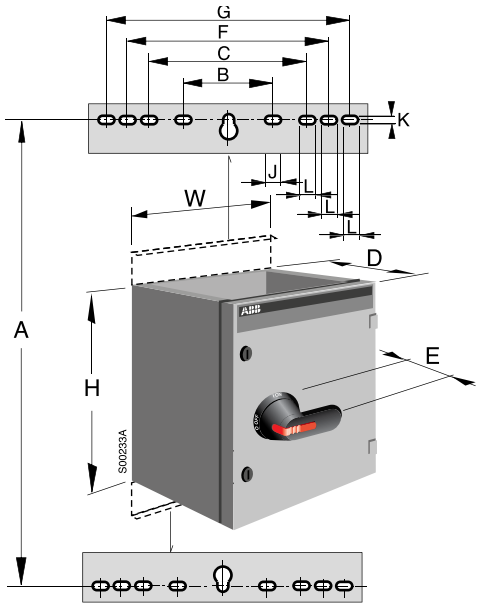

MSC enclosure

Type	Size				Fixing dimensions					Fixing hole		
Steel sheet enclosed	**H**	**W**	**D**	**E**	**A**	**B**	**C**	**F**	**G**	**J**	**K**	**L**
3- and 4-pole cable entries from top and bottom												
OT160E_3_, 4_Z	600	400	230	45	645	303				35	11	
OT200K_3_, 4_Z	600	400	230	45	645	303				35	11	
OT315K_3_, 4_Z	800	400	230	45	845	303				35	11	
OT400D_3_, 4_Z	800	400	230	45	845	303				35	11	
OT630K_3_, 4_Z	1000	400	230	45	1045	303				35	11	
OT800E_3_, 4_Z	1000	400	230	45	1045	303				35	11	
OT1000B_3_Z	1200	800	330	45	1245	303	512	612	712	35	11	27
OT1000BB_3_Z	1200	400	330	45	1245	303				35	11	
OT1250E_3_Z	1200	800	330	45	1245	303	512	612	712	35	11	27
3-pole, cable entries from bottom / 4-pole 250-400A cable entries from bottom												
OT160E_3_, 4_Z	600	400	230	45	645	303				35	11	
OT200K_3_, 4_Z	600	400	230	45	645	303				35	11	
OT250K_3_, 4_Z	600	400	230	45	845	303				35	11	
OT315K_3_, 4_Z	600	400	230	45	845	303				35	11	
OT400D_3_, 4_Z	800	400	230	45	845	303				35	11	
OT630K_3_Z	1000	800	230	45	1045	303	512	612	712	35	11	27
OT630KB_3_Z	1000	400	330	45	1045	303				35	11	
OT800E_3_Z	1000	800	230	45	1045	303	512	612	712	35	11	27
OT1000B_3_Z	1200	800	330	45	1245	303	512	612	712	35	11	27
OT1250E_3_Z	1200	800	330	45	1245	303	512	612	712	35	11	27
6-pole, cable entries from top and bottom												
OT160E_6_Z	600	800	230	45	645	303	512	612	712	35	11	27
OT200K_6_Z	600	800	230	45	645	303	512	612	712	35	11	27
OT250K_6_Z	800	800	230	45	845	303	512	612	712	35	11	27
OT315K_6_Z	800	800	230	45	845	303	512	612	712	35	11	27
OT400D_6_Z	800	800	230	45	845	303	512	612	712	35	11	27
OT630K_6_Z	1000	800	230	45	1045	303	512	612	712	35	11	27
OT800E_6_Z	1000	800	230	45	1045	303	512	612	712	35	11	27

Dimension drawings

Steel sheet enclosed switch-disconnectors

Steel sheet enclosed switch-disconnectors, OT160...1600, OKL100...400

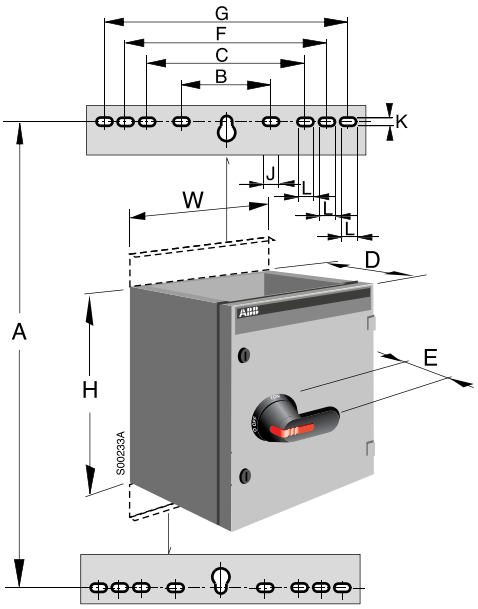

MSC enclosure

Front operated switch-disconnectors

	Size				Fixing dimensions					Fixing holes		
Type	H	W	D	E	A	B	C	F	G	J	K	L
3- and 4-pole, switch-disconnectors												
OT63E_4_	400	250	180	45	445	162	-	-	-	27	11	-
OT125G_3_, 4_	400	250	180	45	445	162	-	-	-	27	11	-
OT160E_3_, 4_	400	250	180	45	445	162	-	-	-	27	11	-
OKL100-125N3/4_	400	400	180	45	445	303	-	-	-	35	11	-
OT200K_3_, 4_, OKL160-315N3/4_	600	400	230	45	645	303	-	-	-	35	11	-
OT250K_3_, 4_	600	400	230	45	645	303	-	-	-	35	11	-
OT315K_3_, 4_	600	400	230	45	645	303	-	-	-	35	11	-
OT400D_3_, 4_, OKL400N3/4_	800	400	230	45	845	303	-	-	-	35	11	-
OT630K_3_, 4_	1000	400	230	45	1045	303	-	-	-	35	11	-
OT800K_3_, 4_	1000	400	230	45	1045	303	-	-	-	35	11	-
OT800K_4_	1200	800	230	45	1045	303	512	612	712	35	11	27
OT1000K_3_, 4_	1200	800	230	45	1045	303	512	612	712	35	11	27
OT1250K_3_, 4_	1200	800	330	45	1045	303	512	612	712	35	11	27
OT1600K_3_, 4_	1200	800	330	45	1045	303	512	612	712	35	11	27
6-pole, switch-disconnectors												
OT125G_6_	400	400	230	45	445	303	-	-	-	35	11	-
OT160E_6_, OKL100-OKL315N6_	600	800	230	45	645	303	-	-	-	35	11	-
OT200K_6_	600	800	230	45	645	303	-	-	-	35	11	-
OT250K_6_	800	800	230	45	845	303	-	-	-	35	11	-
OT315K_6_	800	800	230	45	845	303	-	-	-	35	11	-
OT400D_6_, OKL400N6_	800	800	230	45	845	303	-	-	-	35	11	-
OT630K_6_	1000	800	230	45	1045	303	512	612	712	35	11	27
OT800K_6_	1000	800	230	45	1045	303	512	612	712	35	11	27

Fire rated enclosed switch-disconnectors, F200 and F300

3-, 4- and 6-pole, Fire rated enclosed switch-disconnectors, F200 and F300												
OKL160-315N3/4_	600	400	230	45	645	303	-	-	-	35	11	-
OKL400N3/4_	800	400	230	45	845	303	-	-	-	35	11	-
OKL160-OKL315N6_	600	800	230	45	645	303	-	-	-	35	11	-

Dimension drawings

Steel sheet enclosed switch-disconnectors

OT160...1600 and OT160...800_C, cable entries

OEZXPE24R

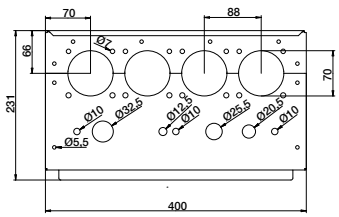

OEZXP240C

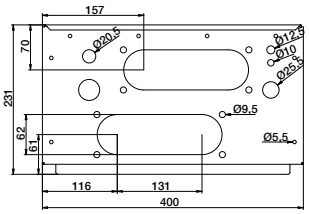

OEZXPE34R

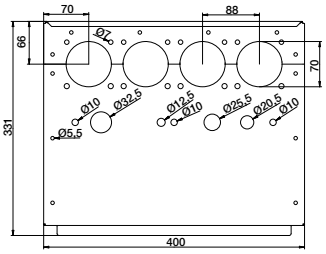

OEZXP340C

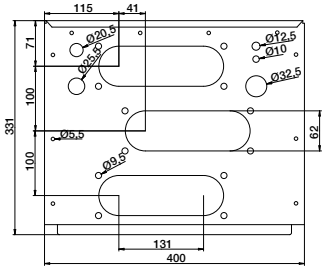

OEZXPE28R

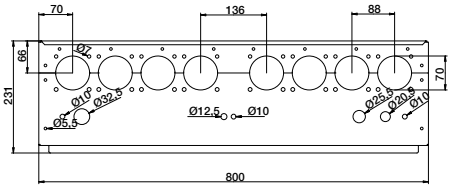

OEZXP280C

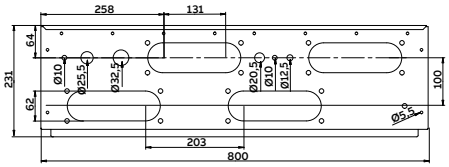

OEZXPE38R

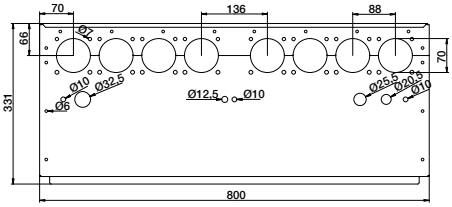

OEZXP380C

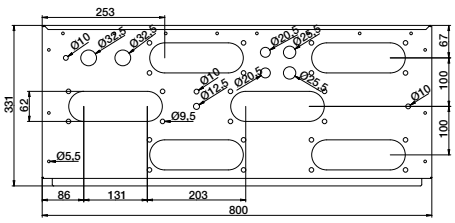

Dimension drawings

Steel sheet enclosed switch-disconnectors

OT160...630_, cable entries, flanges

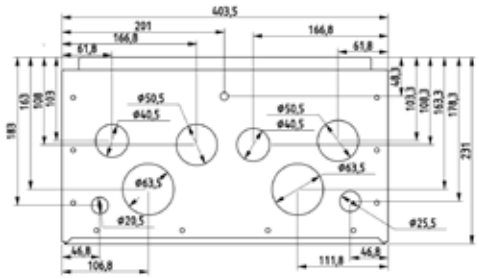

Flange: MSCZNE423CC

OT160EVAUM3TZ
OT200KAUM3TZ
OT315KAUM3TZ
OT250KAUM3TZ
OT400DAUM3TZ

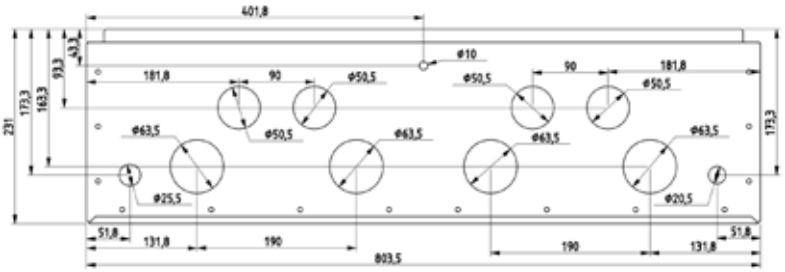

Flange: MSCZNE823CC

OT630KAUM3TZ

Dimension drawings

Acid-proof / Stainless steel sheet enclosed switch-disconnectors

OT160...1250_ and cable entries

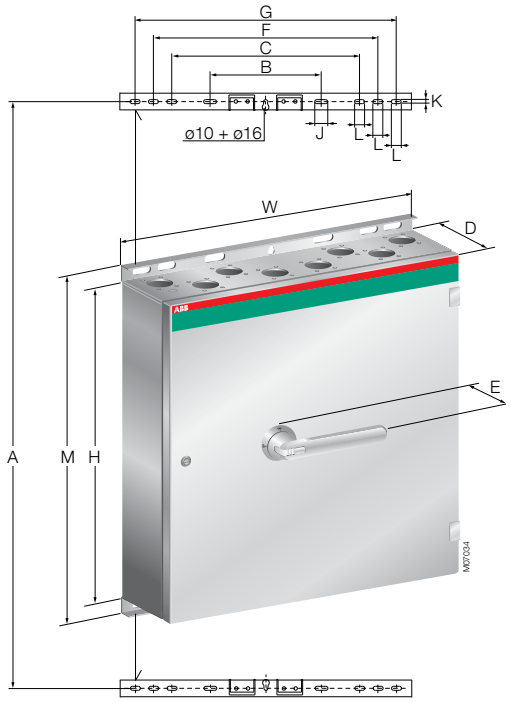

Type	Size					Fixing dimensions					Fixing hole		
	H	W	D	E	M	A	B	C	F	G	J	K	L
3-pole cable entries from top and bottom													
OT160EVRRR3TZ	600	400	230	51	695	645	303				35	11	
OT200ERRR3TZ	600	400	230	51	695	645	303				35	11	
OT250ERRR3TZ	600	400	230	51	695	645	303				35	11	
OT315ERRR3TZ	600	400	230	51	695	645	303				35	11	
OT400ERRR3TZ	800	400	230	51	895	845	303				35	11	
OT630ERRR3TZ	1000	400	230	51	1095	1045	303				35	11	
OT800ERRR3TZ	1000	400	230	51	1095	1045	303				35	11	
OT1000ERRR3TZ	1200	800	330	51	1295	1245	303	512	612	712	35	11	27
OT1250ERRR3TZ	1200	800	330	51	1295	1245	303	512	612	712	35	11	27
3-pole, cable entries from bottom													
OT160EVSUR3TZ	600	400	230	51	695	645	303				35	11	
OT200ESUR3TZ	600	400	230	51	695	645	303				35	11	
OT250ESUR3TZ	800	400	230	51	895	845	303				35	11	
OT315ESUR3TZ	800	400	230	51	895	845	303				35	11	
OT400ESUR3TZ	800	400	230	51	895	845	303				35	11	
OT630ESUR3TZ	1000	800	330	51	1095	1045	303	512	612	712	35	11	27
OT800ESUR3TZ	1000	800	330	51	1095	1045	303	512	612	712	35	11	27
OT1000ESUR3TZ	1200	800	330	51	1295	1245	303	512	612	712	35	11	27
OT1250ESUR3TZ	1200	800	330	51	1295	1245	303	512	612	712	35	11	27
6-pole, cable entries from top and bottom													
OT160EVRRR6TZ	800	800	230	51	895	845	303	512	612	712	35	11	27
OT200ERRR6TZ	800	800	230	51	895	845	303	512	612	712	35	11	27
OT250ERRR6TZ	800	800	230	51	895	845	303	512	612	712	35	11	27
OT315ERRR6TZ	800	800	230	51	895	845	303	512	612	712	35	11	27
OT400ERRR6TZ	800	800	230	51	895	845	303	512	612	712	35	11	27
OT630ERRR6TZ	1000	800	330	51	1095	1045	303	512	612	712	35	11	27
OT800ERRR6TZ	1000	800	330	51	1095	1045	303	512	612	712	35	11	27
6-pole, cable entries from bottom													
OT160EVSUR6TZ	800	800	230	51	895	845	303	512	612	712	35	11	27
OT200ESUR6TZ	800	800	230	51	895	845	303	512	612	712	35	11	27
OT250ESUR6TZ	800	800	230	51	895	845	303	512	612	712	35	11	27
OT315ESUR6TZ	800	800	230	51	895	845	303	512	612	712	35	11	27
OT400ESUR6TZ	800	800	230	51	895	845	303	512	612	712	35	11	27
OT630ESUR6TZ	1000	800	330	51	1095	1045	303	512	612	712	35	11	27

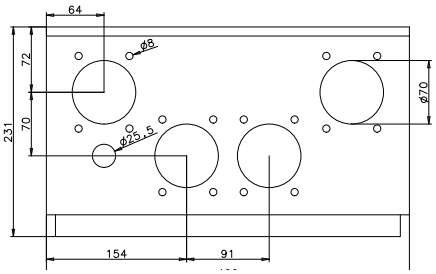

Type	Cable entry size
OT160EV_...800ERRR3TZ	400x230
OT160EV_...400ESUR3TZ	400x230

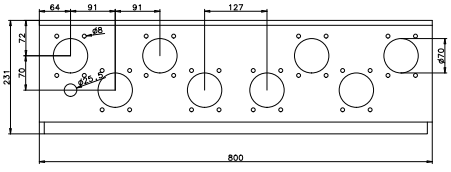

Type	Cable entry size
OT160EV_...400ERRR6TZ	800x230
OT160EV_...400ESUR6TZ	800x230

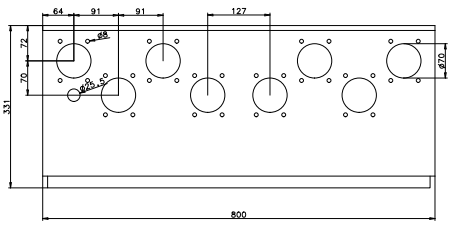

Type	Cable entry size
OT1000...1250ERRR3TZ	800x330
OT630...1250ESUR3TZ	800x330
OT630ESUR6TZ	800x330
OT630...800ERRRGTZ	800x330
OT630...800ERRRGTZ	800x330

Dimension drawings

Aluminium enclosed switch-disconnectors

OTA160...600_

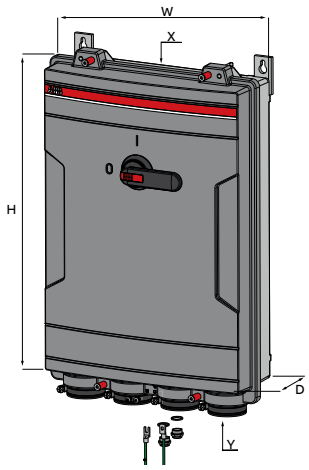

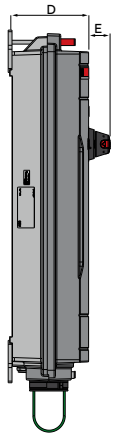

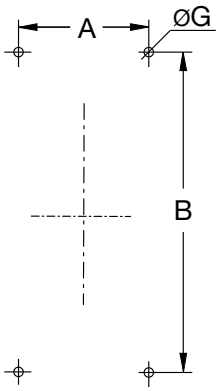

OTA160

Size				Cable entry		Fixing dimensions		
H	W	D	E	X	Y	A	B	G
586	425	196	45	-	2xø24-48mm	365	615	9,8

OTA200...400

Size				Cable entry		Fixing dimensions		
H	W	D	E	X	Y	A	B	G
682	485	208	45	-	4xø28-68mm	425	710	9,8

OTA600

Size				Cable entry		Fixing dimensions		
H	W	D	E	X	Y	A	B	G
819	585	251	45	-	4xø28-68mm	525	840	9,8



Fire rated enclosed switch-disconnectors
Table of contents

166	Technical data
168	Ordering information
170	Fire rated enclosed switch-disconnectors, F200
171	Fire rated enclosed switch-disconnectors, F300
172	Fire rated enclosed switch-disconnectors, F400
178	Dimension drawings
195	Accessories

Technical data

Fire rated enclosed switch-disconnectors

Fire rated enclosed switch-disconnectors, types OKA and OKL class F200 and F300.

Type/size		OKA20_	OKA40_	OK_63_	OKA80_	OKL100_	OKL125_F2_	OKL125_F3_
Rated insulation voltage		750 V	750 V	750 V	750 V	750 V	750 V	750 V
Rated thermal current and rated operational current AC20/DC20	40ºC	20 A	40 A	63 A	80 A	100 A	125 A	125 A
	60ºC	16 A	32 A	50 A	63 A	75 A	100 A	100 A
Rated operational current, AC-21A and AC-22A	415 V	20 A	40 A	63 A	80 A	100 A	125 A	125 A
	up to 500V	20 A	40 A	63 A	80 A	100 A	125 A	125 A
	690V	20 A	40 A	63 A	80 A	100 A	125 A	125 A
Rated operational current, AC-23A	415 V	20 A	23 A	63 A	75 A	80 A	90 A	125 A
	500V	20 A	23 A	45 A	58 A	60 A	70 A	125 A
	690V	12 A	12 A	20 A	20 A	40 A	50 A	125 A
Rated conditional short-circuit current r.m.s and corresponding cut-off current of the fuse in single-phase test according to IEC60269	50kA, 415V	7 kA	7 kA	13 kA	13 kA	17 kA	18 kA	24 kA
	Fuse size: gG/aM	40 A/32 A	40 A/32 A	100 A/80 A	100 A/80 A	125 A/125 A	125 A/100 A	200 A/250 A
	50kA, 690V	4 kA	4 kA	11 kA	11 kA	10 kA	12 kA	24 kA
	Fuse size: gG/aM	25 A/16 A	25 A/16 A	80 A/63 A	80 A/63 A	63 A/63 A	125 A/100 A	200 A/250 A
Rated frequency		50 Hz/60 Hz	50 Hz/60 Hz	50 Hz/60 Hz	50 Hz/60 Hz	50 Hz/60 Hz	50 Hz/60 Hz	50 Hz/60 Hz
Cu-wire size suitable for terminal. Terminal bolt size		0.75...10 mm²	0.75...10 mm²	1.5...25 mm²	1.5...25 mm²	10...70 mm²	10...70 mm²	M8x25
Used switch type		OT40_	OT40_	OT63_	OT80_	OT100_	OT125F_	OT160EV_

Fire rated enclosed switch-disconnectors, types OKA and OKL class F400.

Type/size			OKA20_ F400	OKA25_ F400	OKA32_ F400	OKA40_ F400	OKA63_ F400 OKL63_F400	OKL80_ F400	OKL100_ F400
Rated insulation voltage		V	690	690	690	690	690	690	690
Rated thermal current and rated operational current AC20/DC20	40ºC	A	20	25	32	40	60	80	125
	60ºC	A							
Rated operational current, AC-21A and AC-22A	up to 415V	A	20	25	32	40	60	80	125
	690V	A	20	25	32	40	33	-	-
Rated operational current, AC-23A	up to 415V	A	20	25	32	40	60	80	100
	690V	A	20	25	32	40	33	-	-
Rated operational power, AC-23A. 3-, 4-, and 6-pole	up to 415V	kW	9,5	11	15	18,5	30	40	55
	690V	kW	15	15	15	22	30	-	-
Rated conditional short-circuit current r.m.s and corresponding cut-off current of the fuse in single-phase test according to IEC60269	50kA, 415V	kA	50	50	50	50	50	50	50
	Fuse size: gG	A	20	32	32	40	63	150	150
	40kA, 690V	kA	40	40	40	40	50		
	Fuse size: gG	A	20	32	32	40	63		
Rated frequency		Hz	50/60	50/60	50/60	50/60	50/60	50/60	50/60
Cu-wire size suitable for terminal		mm²	10	10	10	16	16		
Terminal bolt size		mm						10	10

Technical data

Fire rated enclosed switch-disconnectors, 160...800 A

Fire rated enclosed switch-disconnectors, types OKA and OKL class F200 and F300

Type/size			OKL160_	OKL200_	OKL250_	OKL315_	OKL400_	OKL570_	OKL720_
Rated insulation voltage		V	750	750	750	750	750	750	750
Rated thermal current and rated operational current AC20/DC20	40ºC	A	160	200	250	315	400	570	720
	60ºC	A	125	200	250	315	320	460	580
Rated operational current, AC-21A and AC-22A	up to 415 V	A	160	200	250	315	400	570	720
	up to 500V	A	160	200	250	315	400	570	720
	690V	A	160	200	250	315	400	570	720
Rated operational current, AC-23A	up to 415V	A	160	200	250	315	400	570	720
	440V	A	160	200	250	315	400	570	720
	500V	A	160	200	250	315	400	570	720
	690V	A	160	200	250	315	400	570	720
Rated conditional short-circuit current r.m.s and corresponding cut-off current of the fuse in sing-le-phase test according to IEC60269	100kA, 500V	kA	24	40.5	40.5	59	59	90	90
	Fuse size: gG/aM	A/A	200/250	355/315	335/315	500/500	500/500	800/1000	800/1000
	50kA, 690V	kA	24	35	35	51	51	72	72
	Fuse size: gG/aM	A/A	200/250	355/315	335/315	500/500	500/500	800/1000	800/1000
Rated frequency		Hz	50/60	50/60	50/60	50/60	50/60	50/60	50/60
Terminal bolt size			M8x25	M8x25	M8x25	M10x30	M10x30	M12x40	M12x40
Used switch type			OT160EV_	OT200_	OT250_	OT315_	OT400_	OT630_	OT800_

Fire rated enclosed switch-disconnectors, types OKA and OKL class F400

Type/size			OKL160_ F400	OKL200_ F400	OKL250_ F400	OKL315_ F400	OKL400_ F400	OKL630_ F400	OKL800_ F400
Rated insulation voltage		V	1000	1000	1000	1000	1000	1000	1000
Rated thermal current and rated operational current AC20/DC20	40ºC	A	160	200	250	315	400	630	1250
	60ºC	A							
Rated operational current, AC-21A and AC-22A	up to 415V	A	160	200	250	315	400	630	800
	690V	A	160	200	250	315	400	630	-
Rated operational current, AC-23A	up to 415V	A	160	200	250	315	400	630	800
	690V	A	160	200	250	315	400	630	-
Rated operational power, AC-23A. 3-, 4-, and 6-pole	up to 415V	kW	90	110	132	175	200	315	500
	690V	kW	140	170	200	260	315	560	-
Rated conditional short-circuit current r.m.s and corresponding cut-off current of the fuse in single-phase test according to IEC60269	50kA, 415V	kA	50	50	50	50	50	50	50
	Fuse size: gG	A	200	200	250	315	400	630	1000
	40kA, 690V	kA							
	Fuse size: gG	A							
Rated frequency		Hz	50/60	50/60	50/60	50/60	50/60	50/60	50/60
Terminal bolt size			10	10	10	10	10	12	12

Ordering Information

Fire rated enclosed switch-disconnectors, F200 and F300

Type keys

F200 and F300, Fire rated enclosed switch-disconnectors, steel sheet enclosure, type OKL_



Main type	
Fire rated enclosed switch-disconnectors, steel sheet enclosure, F200 and F300	**OKL**

Switch size

Number of poles

Handle colour	
Black pistol type handle	**B**
Red-yellow pistol type handle	**Y**

Cable openings	
Blank / Blank on top and bottom	**UU**

Construction	
F200, fire rated enclosed switch / blank cable outlets	**F2**
F300, fire rated enclosed switch/ blank cable outlets	**F3**

Amount of auxiliary contacts

Neutral terminal	
Neutral terminal included	**N**
Neutral terminal is not included	**0**

Ordering Information

Fire rated enclosed switch-disconnectors, F400

Type keys

F400, Fire rated enclosed switch-disconnectors, aluminium and steel sheet enclosures, types OKA_ and OKL_

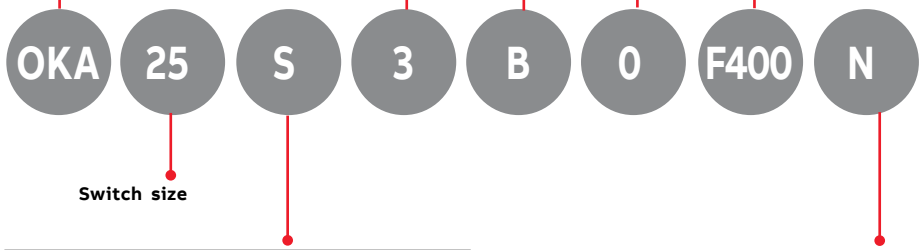

Main type	
Fire rated enclosed switch-disconnectors, aluminium enclosure, F400	**OKA**
Fire rated enclosed switch-disconnectors, steel sheet enclosure, F400	**OKL**

Switch size

Number of poles

Handle type	
Selector type handle	**S**
Pistol type handle	**P**

Amount of auxiliary contacts

Handle colour, construction	
Black handle	**B**
Red-yellow handle	**Y**

Construction	
F400, fire rated enclosed switch	**F400**

Neutral terminal	
Neutral terminal included	**N**
Empty when the neutral terminal is not included	

Ordering information

Fire rated enclosed switch-disconnectors, F200



OKA20 - OKA40



OKA63 - OKA80



OKL63 - OKL100



OKL125 - OKL200

F200, Aluminium enclosure, 3-and 4-pole, red handle, IP65

The delivery includes a red handle (I-O/ON-OFF), PE-terminal, threaded cable entries and auxiliary contacts. Grey enclosure. Handle padlockable in OFF-position, with knock outs for ON-position. The cover is interlocked. One NO auxiliary contact and safety switch sticker included. EMC approved.

Cable entries from top and bottom

Rated current and power			Dimensions					Weight
AC-22A	AC-23A							
<415V	<415V		Height	Width	Depth			/unit
A	kW/A	Cable outlets/side	mm	mm	mm	Type	Order number	kg
3-pole								
20	9/20	2xM25+M20/2xM25+M20	165	130	131	OKA20S3RF2	1SCA150645R1001	1.3
40	11/23	2xM32+M20/2xM32+M20	165	130	131	OKA40S3RF2	1SCA150647R1001	1.3
63	30/63	2xM40/2xM40+M16	230	160	145	OKA63S3RF2	1SCA150649R1001	1.8
80	37/75	2xM40/2xM40+M16	230	160	145	OKA80S3RF2	1SCA150651R1001	1.8
4-pole								
20	9/20	2xM25+M20/2xM25+M20	165	130	131	OKA20S4RF2	1SCA150646R1001	1.3
40	11/23	2xM32+M20/2xM32+M20	165	130	131	OKA40S4RF2	1SCA150648R1001	1.3
63	30/63	2xM40/2xM40+M16	230	160	145	OKA63S4RF2	1SCA150650R1001	1.8
80	37/75	2xM40/2xM40+M16	230	160	145	OKA80S4RF2	1SCA150652R1001	1.8

F200, Steel sheet enclosure, 3-and 4-pole, red-yellow handle, IP65

The delivery includes a red handle (I-O/ON-OFF), PE-terminal and auxiliary contact. Grey enclosure. Handle padlockable in OFF and ON-position. The cover is interlocked, including defeatable interlock. One NO auxiliary contact and safety switch sticker included. EMC approved.

Cable entries from top and bottom

Rated current			Dimensions					Weight
AC-22A	AC-23A							
<415V	<415V		Height	Width	Depth			/unit
A	kW/A	Cable outlets/side	mm	mm	mm	Type	Order number	kg
3-pole								
63	30/63	Blank/Blank	300	200	135	OKL63N3YF2	1SCA152253R1001	4.5
100	37/80	Blank/Blank	300	200	135	OKL100N3YF2	1SCA152255R1001	4.5
125	45/90	Blank/Blank*	400	250	180	OKL125N3YF2UU1N	1SCA152257R1001	17.8
160	88/160	Blank/Blank	600	400	230	OKL160N3YF2UU1N	1SCA152261R1001	17.8
200	110/200	Blank/Blank	600	400	230	OKL200N3YF2UU1N	1SCA152265R1001	17.8
4-pole								
63	30/63	Blank/Blank	300	200	135	OKL63N4YF2	1SCA152254R1001	4.5
100	37/80	Blank/Blank	300	200	135	OKL100N4YF2	1SCA152256R1001	4.5
125	45/90	Blank/Blank*	400	250	180	OKL125N4YF2UU10	1SCA152259R1001	17.8
160	88/160	Blank/Blank	600	400	230	OKL160N4YF2UU10	1SCA152263R1001	17.8
200	110/200	Blank/Blank	600	400	230	OKL200N4YF2UU10	1SCA152267R1001	17.8

*) Include knock outs: 10mm, 12.5mm, 20.5mm, 25.5mm

Ordering information

Fire rated enclosed switch-disconnectors, F300



OKL125_...OKL400_



OKL570_...OKL720_

F300, Steel sheet enclosure 3-and 4-pole, red-yellow handle, IP65

The delivery includes a red-yellow handle (I-O/ON-OFF) and PE-terminal. Grey enclosure. Handle padlockable in OFF and ON-position. The cover is interlocked, including defeatable interlock. EMC approved.

Cable entries from top and bottom

Rated current and power								
AC-22A	AC-23A		Dimensions					Weight
<415V	<415V	Cable	Height	Width	Depth			/unit
A	kW/A	openings/side	mm	mm	mm	Type	Order number	kg
3-pole								
125	55/125	Blank/Blank	600	400	230	OKL125N3YF3UU0N	1SCA152258R1001	17.8
160	88/160	Blank/Blank	600	400	230	OKL160N3YF3UU0N	1SCA152262R1001	17.8
200	110/200	Blank/Blank	600	400	230	OKL200N3YF3UU0N	1SCA152266R1001	17.8
250	110/250	Blank/Blank	600	400	230	OKL250N3YF3UU0N	1SCA152269R1001	18.1
315	160/315	Blank/Blank	600	400	230	OKL315N3YF3UU0N	1SCA152271R1001	20.1
400	220/400	Blank/Blank	800	400	230	OKL400N3YF3UU0N	1SCA152273R1001	25.0
570	315/570	Blank/Blank	1000	400	230	OKL570N3YF3UU0N	1SCA152275R1001	34.0
720	400/720	Blank/Blank	1000	400	230	OKL720N3YF3UU0N	1SCA152277R1001	34.0
4-pole								
125	55/125	Blank/Blank	600	400	230	OKL125N4YF3UU00	1SCA152260R1001	17.8
160	88/160	Blank/Blank	600	400	230	OKL160N4YF3UU00	1SCA152264R1001	17.8
200	110/200	Blank/Blank	600	400	230	OKL200N4YF3UU00	1SCA152268R1001	17.8
250	110/250	Blank/Blank	600	400	230	OKL250N4YF3UU00	1SCA152270R1001	18.1
315	160/315	Blank/Blank	600	400	230	OKL315N4YF3UU00	1SCA152272R1001	20.1
400	220/400	Blank/Blank	800	400	230	OKL400N4YF3UU00	1SCA152274R1001	25.0
570	315/570	Blank/Blank	1000	400	230	OKL570N4YF3UU00	1SCA152276R1001	34.0
720	400/720	Blank/Blank	1000	400	230	OKL720N4YF3UU00	1SCA152278R1001	34.0

Ordering information

Fire rated enclosed switch-disconnectors, F400


OKA20S2B0F400


OKA40S2B0F400


OKL63P2Y0F400


OKL80P2Y0F400


OKL100P2Y0F400


OKL160P3Y0F400


OKL315P3Y0F400


OKL630P3Y0F400


OKL800P3Y0F400

F400, Aluminium and steel sheet enclosure, 2- and 3-pole, no neutral nor auxiliary contact

The delivery includes a black or a red-yellow handle (I-O/ON-OFF) and PE-terminal. Red enclosure. Handle padlockable in OFF- and ON-position. The cover is interlocked. EMC approved. Cable entries from top and bottom.

2-pole, no neutral terminal nor auxiliary contacts

Max. motor output/ AC-23A		Enclosure dimensions					Weight/ unit
230V		Height	Width	Depth			
kW/A	Cable outlets/side	mm	mm	mm	Type	Order number	kg
Aluminium die cast enclosure							
3.6/20	M20+M25/M20+M25	150	100	133	OKA20S2B0F400	1SCA162327R1001	1,1
5/25	M20+M25/M20+M25	150	100	133	OKA25S2B0F400	1SCA162335R1001	1,1
6/32	M20+M25/M20+M25	150	100	133	OKA32S2B0F400	1SCA162343R1001	1,1
6/40	2xM25/2xM25	220	150	158	OKA40S2B0F400	1SCA162351R1001	2,0
7.5/60	2xM32/2xM32	220	150	158	OKA63S2B0F400	1SCA162359R1001	2,0
Steel sheet enclosure							
7.5/60	Blank/Blank	300	300	150	OKL63P2Y0F400	1SCA162394R1001	6,8
12/80	Blank/Blank	400	300	200	OKL80P2Y0F400	1SCA162404R1001	9,3
15/100	Blank/Blank	500	300	250	OKL100P2Y0F400	1SCA162366R1001	11,7

3-pole, no neutral terminal nor auxiliary contacts

Max. motor output/ AC-23A		Enclosure dimensions					Weight/ unit
415V		Height	Width	Depth			
kW/A	Cable outlets/side	mm	mm	mm	Type	Order number	kg
Aluminium die cast enclosure							
9.5/20	M20+M25/M20+M25	150	100	133	OKA20S3B0F400	1SCA162328R1001	1,2
11/25	M20+M25/M20+M25	150	100	133	OKA25S3B0F400	1SCA162336R1001	1,2
15/32	M20+M25/M20+M25	150	100	133	OKA32S3B0F400	1SCA162344R1001	1,2
18.5/40	2xM25/2xM25	220	150	158	OKA40S3B0F400	1SCA162352R1001	2,2
30/60	2xM32/2xM32	220	150	158	OKA63S3B0F400	1SCA162360R1001	2,2
Steel sheet enclosure							
30/60	Blank/Blank	300	300	150	OKL63P3Y0F400	1SCA162395R1001	6,9
40/80	Blank/Blank	400	300	200	OKL80P3Y0F400	1SCA162405R1001	9,8
55/100	Blank/Blank	500	300	250	OKL100P3Y0F400	1SCA162367R1001	12,2
30/60	Blank/Blank	300	300	150	OKL63P3Y0F400	1SCA162395R1001	6,9
40/80	Blank/Blank	400	300	200	OKL80P3Y0F400	1SCA162405R1001	9,8
55/100	Blank/Blank	500	300	250	OKL100P3Y0F400	1SCA162367R1001	12,2
90/160	Blank/Blank	600	500	200	OKL160P3Y0F400	1SCA162373R1001	18,2
110/200	Blank/Blank	600	500	200	OKL200P3Y0F400	1SCA162377R1001	18,2
132/250	Blank/Blank	600	500	200	OKL250P3Y0F400	1SCA162381R1001	18,2
175/315	Blank/Blank	800	600	200	OKL315P3Y0F400	1SCA162385R1001	26,2
200/400	Blank/Blank	800	600	200	OKL400P3Y0F400	1SCA162388R1001	26,2
315/630	Blank/Blank	1000	600	300	OKL630P3Y0F400	1SCA162391R1001	37,5
500/800	Blank/Blank	1400	800	300	OKL800P3Y0F400	1SCA162402R1001	190,0

Ordering information

Fire rated enclosed switch-disconnectors, F400


OKA20S6B0F400


OKA40S6B0F400


OKL63P6Y0F400


OKL80P6Y0F400


OKL100P6Y0F400


OKL160P6Y0F400

F400, Aluminium and steel sheet enclosure, 6-pole, no neutral nor auxiliary contact

The delivery includes a black or a red-yellow handle (I-O/ON-OFF) and PE-terminal. Red enclosure. Handle padlockable in OFF and ON-position. The cover is interlocked. EMC approved. Cable entries from top and bottom.

6-pole, no neutral terminal nor auxiliary contacts

Max. motor output/ AC-23A		Enclosure dimensions					Weight/ unit
415V		Height	Width	Depth			
kW/A	Cable outlets/side	mm	mm	mm	Type	Order number	kg
Aluminium die cast enclosure							
9.5/20	M20+M25/M20+M25	150	100	133	OKA20S6B0F400	1SCA162333R1001	1,3
11/25	M20+M25/M20+M25	150	100	133	OKA25S6B0F400	1SCA162341R1001	1,3
15/32	M20+M25/M20+M25	150	100	133	OKA32S6B0F400	1SCA162349R1001	1,3
18.5/40	2xM25/2xM25	220	150	158	OKA40S6B0F400	1SCA162357R1001	2,3
30/60	2xM32/2xM32	220	150	158	OKA63S6B0F400	1SCA162365R1001	2,3
Steel sheet enclosure							
30/60	Blank/Blank	300	300	150	OKL63P6Y0F400	1SCA162400R1001	7,1
40/80	Blank/Blank	400	300	200	OKL80P6Y0F400	1SCA162410R1001	10,8
110/200	Blank/Blank	800	600	300	OKL200P6Y0F400	1SCA162380R1001	27,2
132/250	Blank/Blank	800	600	300	OKL250P6Y0F400	1SCA162384R1001	27,2

Ordering information

Fire rated enclosed switch-disconnectors, F400



OKA20S3B0F400N



OKA40S3B0F400N



OKL63P3Y0F400N



OKL80P3Y0F400N



OKL100P3Y0F40(



OKL160P3Y0F400N



OKL315P3Y0F400N



OKL630P3Y0F400N



OKL800P3Y0F400N

F400, Aluminium and steel sheet enclosure, 3-pole, including neutral. No auxiliary contact

The delivery includes a black or a red-yellow handle (I-O/ON-OFF) and PE-terminal. Red enclosure. Handle padlockable in OFF and ON-position. The cover is interlocked. EMC approved. Cable entries from top and bottom.

3-pole, incl. neutral terminal. No auxiliary contacts

Max. motor output/ AC-23A		Enclosure dimensions					Weight/ unit
415V		Height	Width	Depth			
kW/A	Cable outlets/side	mm	mm	mm	Type	Order number	kg
Aluminium die cast enclosure							
9.5/20	M20+M25/M20+M25	150	100	133	OKA20S3B0F400N	1SCA162329R1001	1,2
11/25	M20+M25/M20+M25	150	100	133	OKA25S3B0F400N	1SCA162337R1001	1,2
15/32	M20+M25/M20+M25	150	100	133	OKA32S3B0F400N	1SCA162345R1001	1,2
18.5/40	2xM25/2xM25	220	150	158	OKA40S3B0F400N	1SCA162353R1001	2,2
30/60	2xM32/2xM32	220	150	158	OKA63S3B0F400N	1SCA162361R1001	2,2
Steel sheet enclosure							
30/60	Blank/Blank	300	300	150	OKL63P3Y0F400N	1SCA162396R1001	7,0
40/80	Blank/Blank	400	300	200	OKL80P3Y0F400N	1SCA162406R1001	10,3
55/100	Blank/Blank	500	300	250	OKL100P3Y0F400N	1SCA162368R1001	13,2
90/160	Blank/Blank	600	500	200	OKL160P3Y0F400N	1SCA162374R1001	19,4
110/200	Blank/Blank	600	500	200	OKL200P3Y0F400N	1SCA162378R1001	19,4
132/250	Blank/Blank	600	500	200	OKL250P3Y0F400N	1SCA162382R1001	19,4
175/315	Blank/Blank	800	600	200	OKL315P3Y0F400N	1SCA162386R1001	27,6
200/400	Blank/Blank	800	600	200	OKL400P3Y0F400N	1SCA162389R1001	27,6
315/630	Blank/Blank	1000	600	300	OKL630P3Y0F400N	1SCA162392R1001	38,9
500/800	Blank/Blank	1400	800	300	OKL800P3Y0F400N	1SCA162403R1001	190,0

Ordering information

Fire rated enclosed switch-disconnectors, F400


OKA20S4B0F400


OKA40S4B0F400


OKL63P4Y0F400


OKL80P4Y0F400


OKL80P6Y0F400N


OKL100P4Y0F400


OKL160P4Y0F400


OKL315P4Y0F400


OKL630P4Y0F400

F400, Aluminium and steel sheet enclosure, 4- and 6-pole. No auxiliary contact

The delivery includes a black or a red-yellow handle (I-O/ON-OFF) and PE-terminal. Red enclosure. Handle padlockable in OFF and ON-position. The cover is interlocked. EMC approved. Cable entries from top and bottom.

4-pole, no auxiliary contacts

Max. motor output/ AC-23A		Enclosure dimensions					Weight/ unit
415V		Height	Width	Depth			
kW/A	Cable outlets/side	mm	mm	mm	Type	Order number	kg
Aluminium die cast enclosure							
9.5/20	M20+M25/M20+M25	150	100	133	OKA20S4B0F400	1SCA162331R1001	1,2
11/25	M20+M25/M20+M25	150	100	133	OKA25S4B0F400	1SCA162339R1001	1,2
15/32	M20+M25/M20+M25	150	100	133	OKA32S4B0F400	1SCA162347R1001	1,2
18.5/40	2xM25/2xM25	220	150	158	OKA40S4B0F400	1SCA162355R1001	2,2
30/60	2xM32/2xM32	220	150	158	OKA63S4B0F400	1SCA162363R1001	2,2
Steel sheet enclosure							
30/60	Blank/Blank	300	300	150	OKL63P4Y0F400	1SCA162398R1001	7,0
40/80	Blank/Blank	400	300	200	OKL80P4Y0F400	1SCA162408R1001	10,3
55/100	Blank/Blank	500	300	250	OKL100P4Y0F400	1SCA162370R1001	13,2
90/160	Blank/Blank	600	500	200	OKL160P4Y0F400	1SCA162375R1001	19,4
110/200	Blank/Blank	600	500	200	OKL200P4Y0F400	1SCA162379R1001	19,4
132/250	Blank/Blank	600	500	200	OKL250P4Y0F400	1SCA162383R1001	19,4
175/315	Blank/Blank	800	600	200	OKL315P4Y0F400	1SCA162387R1001	27,6
200/400	Blank/Blank	800	600	200	OKL400P4Y0F400	1SCA162390R1001	27,6
315/630	Blank/Blank	1000	600	300	OKL630P4Y0F400	1SCA162393R1001	38,9

6-pole, incl. neutral terminal. No auxiliary contacts

Aluminium die cast enclosure							
40/80	Blank/Blank	500	300	250	OKL80P6Y0F400N	1SCA162411R1001	11,3

Ordering information

Fire rated enclosed switch-disconnectors, F400


OKA20S3B1F400


OKA40S3B1F400


OKL63P3Y1F400


OKL80P3Y1F400


OKL100P3Y1F400

F400, Aluminium and steel sheet enclosure, 3- and 4-pole. No neutral terminal Including auxiliary contact

The delivery includes a black or a red-yellow handle (I-O/ON-OFF) and PE-terminal. Red enclosure. Handle padlockable in OFF and ON-position. The cover is interlocked. EMC approved. Cable entries from top and bottom. Safety switch sticker included.

3-pole, incl. auxiliary contacts

Max. motor output/ AC-23A		Enclosure dimensions					Weight/ unit
415V		Height	Width	Depth			
kW/A	Cable outlets/side	mm	mm	mm	Type	Order number	kg
Aluminium die cast enclosure							
9.5/20	M20+M25/M20+M25	150	100	133	OKA20S3B1F400	1SCA162330R1001	1,2
11/25	M20+M25/M20+M25	150	100	133	OKA25S3B1F400	1SCA162338R1001	1,2
15/32	M20+M25/M20+M25	150	100	133	OKA32S3B1F400	1SCA162346R1001	1,2
18.5/40	2xM25/2xM25	220	150	158	OKA40S3B1F400	1SCA162354R1001	2,2
30/60	2xM32/2xM32	220	150	158	OKA63S3B1F400	1SCA162362R1001	2,2
Steel sheet enclosure							
30/60	Blank/Blank	300	300	150	OKL63P3Y1F400	1SCA162397R1001	7,0
40/80	Blank/Blank	400	300	200	OKL80P3Y1F400	1SCA162407R1001	10,3
55/100	Blank/Blank	500	300	250	OKL100P3Y1F400	1SCA162369R1001	13,2

4-pole, incl. auxiliary contacts. Excluding neutral terminal

Max. motor output/ AC-23A		Enclosure dimensions					Weight/ unit
415V		Height	Width	Depth			
kW/A	Cable outlets/side	mm	mm	mm	Type	Order number	kg
Aluminium die cast enclosure							
9.5/20	M20+M25/M20+M25	150	100	133	OKA20S4B1F400	1SCA162332R1001	1,3
11/25	M20+M25/M20+M25	150	100	133	OKA25S4B1F400	1SCA162340R1001	1,3
15/32	M20+M25/M20+M25	150	100	133	OKA32S4B1F400	1SCA162348R1001	1,3
18.5/40	2xM25/2xM25	220	150	158	OKA40S4B1F400	1SCA162356R1001	2,3
30/60	2xM32/2xM32	220	150	158	OKA63S4B1F400	1SCA162364R1001	2,3
Steel sheet enclosure							
30/60	Blank/Blank	300	300	150	OKL63P4Y1F400	1SCA162399R1001	7,1
40/80	Blank/Blank	400	300	200	OKL80P4Y1F400	1SCA162409R1001	10,8

Ordering information

Fire rated enclosed switch-disconnectors, F400



OKA20S6B1F400



OKA40S6B1F400



OKL63P6Y1F400



OKL80P6Y1F400



OKL100P6Y1F400

F400, Aluminium and steel sheet enclosure, 6-pole. No neutral terminal. Including auxiliary contact.

The delivery includes a black or a red-yellow handle (I-O/ON-OFF) and PE-terminal. Red enclosure. Handle padlockable in OFF and ON-position. The cover is interlocked. EMC approved. Cable entries from top and bottom. Safety switch sticker included.

6-pole, incl. auxiliary contacts. Excluding neutral terminal

Max. motor output/ AC-23A		Enclosure dimensions					Weight/ unit
415V		Height	Width	Depth			
kW/A	Cable outlets/side	mm	mm	mm	Type	Order number	kg
Aluminium die cast enclosure							
9.5/20	M20+M25/2xM20+M25	150	100	133	OKA20S6B1F400	1SCA162334R1001	1,3
11/25	M20+M25/2xM20+M25	150	100	133	OKA25S6B1F400	1SCA162342R1001	1,3
15/32	M20+M25/2xM20+M25	150	100	133	OKA32S6B1F400	1SCA162350R1001	1,3
18.5/40	2xM25/2xM25+M20	220	150	158	OKA40S6B1F400	1SCA162358R1001	2,3
Steel sheet enclosure							
30/60	Blank/Blank	300	300	150	OKL63P6Y1F400	1SCA162401R1001	7,2
40/80	Blank/Blank	400	300	250	OKL80P6Y1F400	1SCA162412R1001	11,2
55/100	Blank/Blank	500	300	250	OKL100P6Y1F400	1SCA162372R1001	13,5

Dimension drawings

Fire rated enclosed switch-disconnectors, F200 and F300

OKA20...80, F200

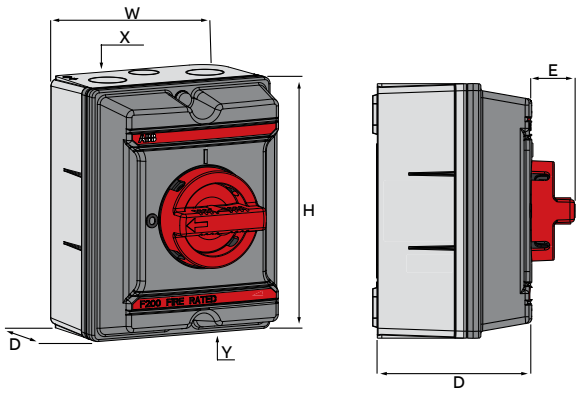

Type	H	W	D	E	X	Y
OKA20...40_	165	130	131	28	2XM25 + 1XM20	2XM25 + 1M20
OKA63...80_	230	160	145	28	2XM40	2XM40+M16

OKL63...125N3/4YF2, F200

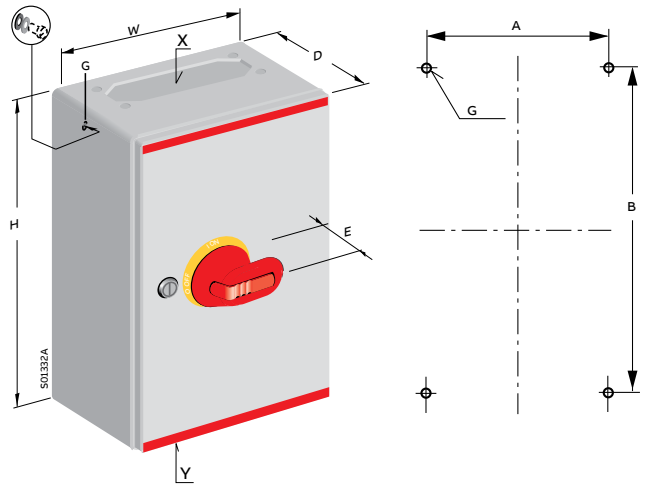

				Size		Cable entry		Fixing dimensions	
Type	H	W	D	E	X	Y	A	B	G
3-pole									
OKL63N3YF2	300	200	135	45	Blank	Blank	130	230	6,5
OKL100...125N3YF2	300	200	135	45	Blank	Blank	130	230	6,5
4-pole									
OKL63N4YF2	300	200	135	45	Blank	Blank	130	230	6,5
OKL100...125N4YF2	300	200	135	45	Blank	Blank	130	230	6,5

OKL100...720, F200 and F300

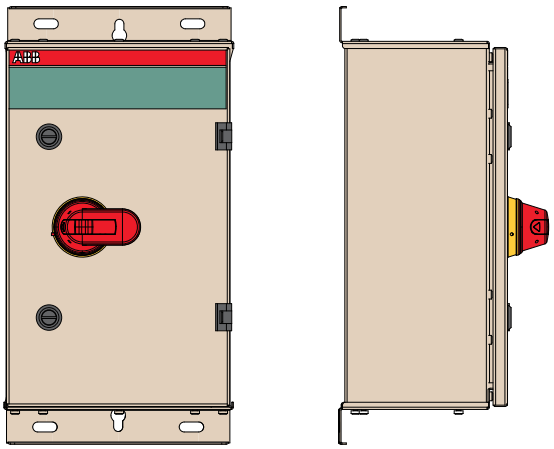

For measurements, see pages:

- OKL125N3/4YF_UU_, page 105
- OKL160..720_, page 159

Dimension drawings

Fire rated enclosed switch-disconnectors, F400

OKA20...63_F400

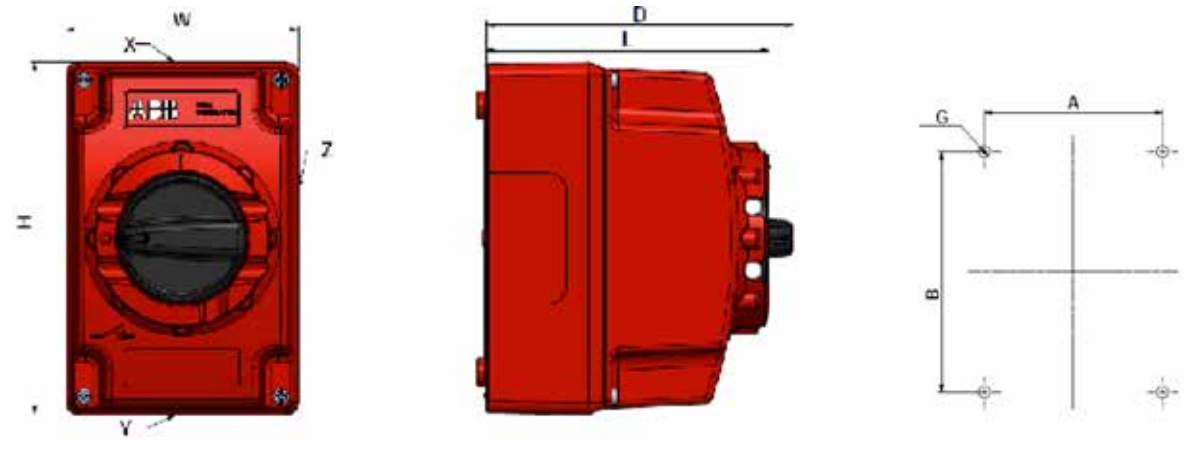

	Size				Cable inlets		Wall mounting			
Type	H	W	D	L	X	Y	Z (6-pole only)	A	B	G
OKA20...32	150	100	133	122	1xM20+1xM25	1xM20+1xM25	1xM20	85	113,5	5,5
OKA40...63	220	150	158	147	2xM32	2xM32	-	135	180	5,5

OKA20...32, 6-pole right side

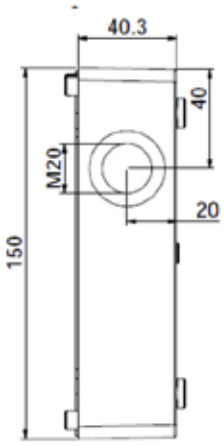

OKA20...32 bottom

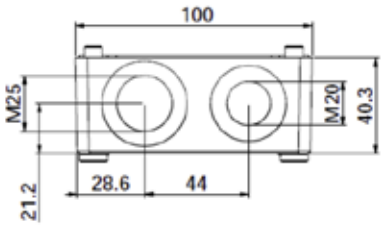

OKA40...64 bottom

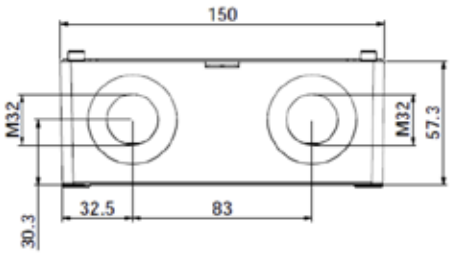

Dimension drawings

Fire rated enclosed switch-disconnectors, F400

OKL63...800_F400

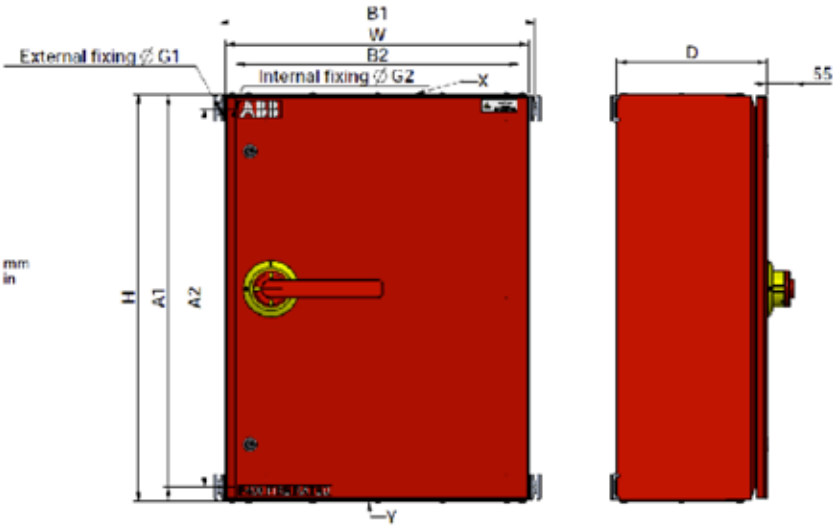

	Size			Cable inlets		Wall mounting					
Type	H	W	D	X	Y	A1	B1	A2	B2	G1	G2
OKL63	300	300	150	Removable gland plate		248	324	248	258	7	7
OKL80	400	300	200	Removable gland plate		348	324	348	258	7	7
OKL80P6_1_ / OKL80P6_N OKL100	500	300	250	Removable gland plate		448	324	448	258	7	7
OKL160...250	600	500	200	Removable gland plate		548	524	548	458	7	7
OKL160...250 6-pole	800	600	300	Removable gland plate		748	624	748	558	7	7
OKL315...400	800	600	200	Removable gland plate		748	624	748	558	7	7
OKL630	1000	600	300	Removable gland plate		948	624	948	558	7	7
OKL800	1400	800	300	Removable gland plate		1288	844	1288	758	7	7

Dimension drawings

Fire rated enclosed switch-disconnectors, F400

Blind plate dimensions for Fire rated enclosed switch-disconnectors, F400

OKL63

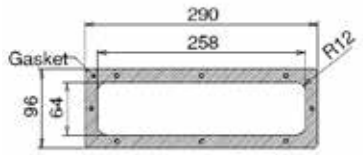

OKL80

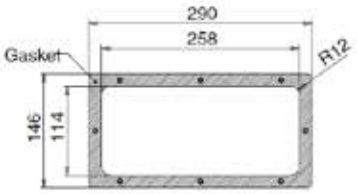

OKL100

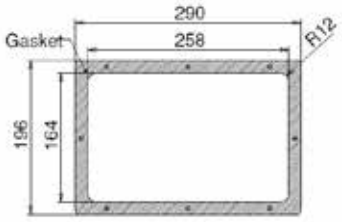

OKL160-250

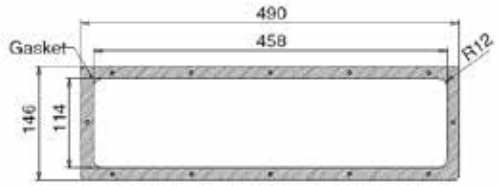

OKL160-250P6

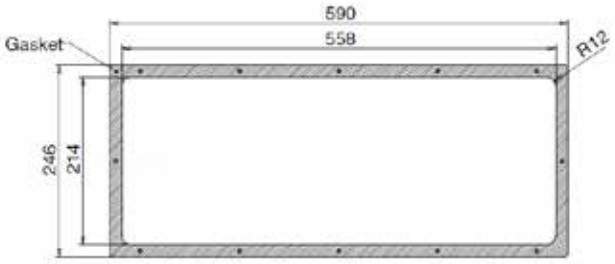

OKL315-400

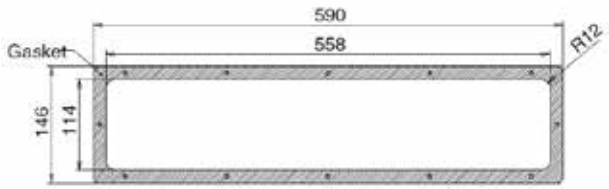

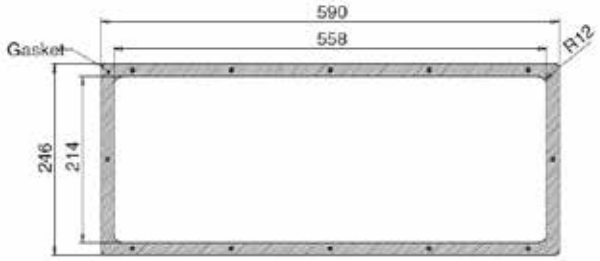

OKL800

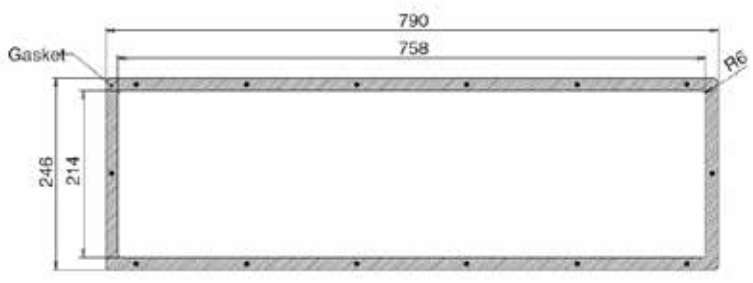



Enclosed change-over switches, 16...630 A
Table of contents

184	Technical data
186	Ordering information
186	Steel sheet enclosed change-over switches
191	Dimension drawings
195	Accessories

Technical data

Enclosed change-over switches, 16...80 A

Enclosed change-over switches, types:
- Steel sheet enclosed: OTL_C_, OT_CZ

Data according to IEC60529 and IEC 60947-3	**Switch size**		**16**	**25**	**40**	**63**	**63**	**80**
	Switch type		**OTL**	**OTL**	**OTL**	**OTL**	**OT**	**OTL**
Rated insulation voltage		V	750	750	750	750	750	750
Rated thermal current and rated operational current AC20/DC20	40ºC	A	25	32	40	63	63	80
	60ºC	A	20	25	32	50	50	63
Rated operational current, AC-21A and AC-22A	up to 415V	A	16	25	40	63	63	80
	up to 500V	A	16	25	40	63	63	80
	690V	A	16	25	40	63	63	80
Rated operational current, AC-23A	up to 415V	A	16	20	23	45	63	75
	440V	A	16	20	23	45	45	63
	500V	A	16	20	23	45	60	58
	690V	A	10	11	12	20	40	20
Rated conditional short-circuit current r.m.s and corresponding cut-off current of the fuse in single-phase test according to IEC60269	50kA, 415V	kA	6.5	13	13	13	13	13
	Fuse size: gG/aM	A	40/32	40/32	40/32	100/80	100/80	100/80
	50kA, 690V	kA	4	4	4	11	11	11
	Fuse size: gG/aM	A	25/16	25/16	25/16	80/63	80/63	80/63
Rated frequency		Hz	50/60	50/60	50/60	50/60	50/60	50/60
Cu-wire size suitable for terminal		mm^2	0.75...10	0.75...10	0.75...10	1.5...35	1.5...35	1.5...35
Used switch type			OT16_	OT25_	OT40_	OT63_	OT63F4C	OT80_

Technical data

Enclosed change-over switches, 160...630 A

Enclosed change-over switches, types:

- Steel sheet enclosed: OT_CZ

Data according to IEC 60947-3	Switch size		160	200	250	400	630
	Switch type		OT	OT	OT	OT	OT
Rated Insulation voltage		V	750	750	750	750	750
Rated thermal current	40ºC	A	160	200	250	400	570
	60ºC	A	160	200	200	320	460
Rated operational current, AC-21A and AC-22A	up to 415 V	A	160	200	250	400	570
	up to 500V	A	160	200	250	400	570
	690V	A	160	200	250	400	570
Rated operational current, AC-23A	up to 415V	A	160	200	250	400	570
	440V	A	125	200	250	400	570
	500V	A	160	200	250	400	570
	690V	A	160	200	250	400	570
Rated conditional short-circuit current r.m.s and corresponding cut-off current of the fuse in single-phase test according to IEC60269	50kA, 400V	kA	24	35	35	50.5	71.5
	Fuse size:	gG/aM	355/315	355/315	355/315	500/500	800/1000
	50kA, 690V[1)]	kA	35	35	35	50.5	71.5
	Fuse size:	gG/aM	355/315	355/315	355/315	500/500	800/1000
Rated frequency		Hz	50/60	50/60	50/60	50/60	50/60
Terminal bolt size		mm	M8x25	M8x25	M8x25	M10x30	M12x40
Used switch type			OT160EV_	OT200_	OT250_	OT400_	OT630_

Ordering Information

Steel sheet enclosed change-over switches, 16...80 A

Type keys

Steel sheet enclosed change-over switches, type OTL_

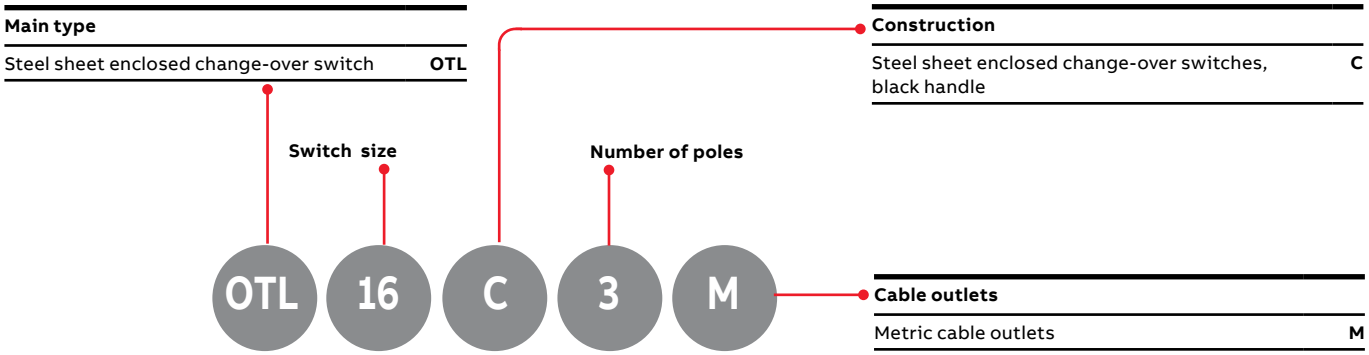

Steel sheet enclosed change-over switches, type OT63_

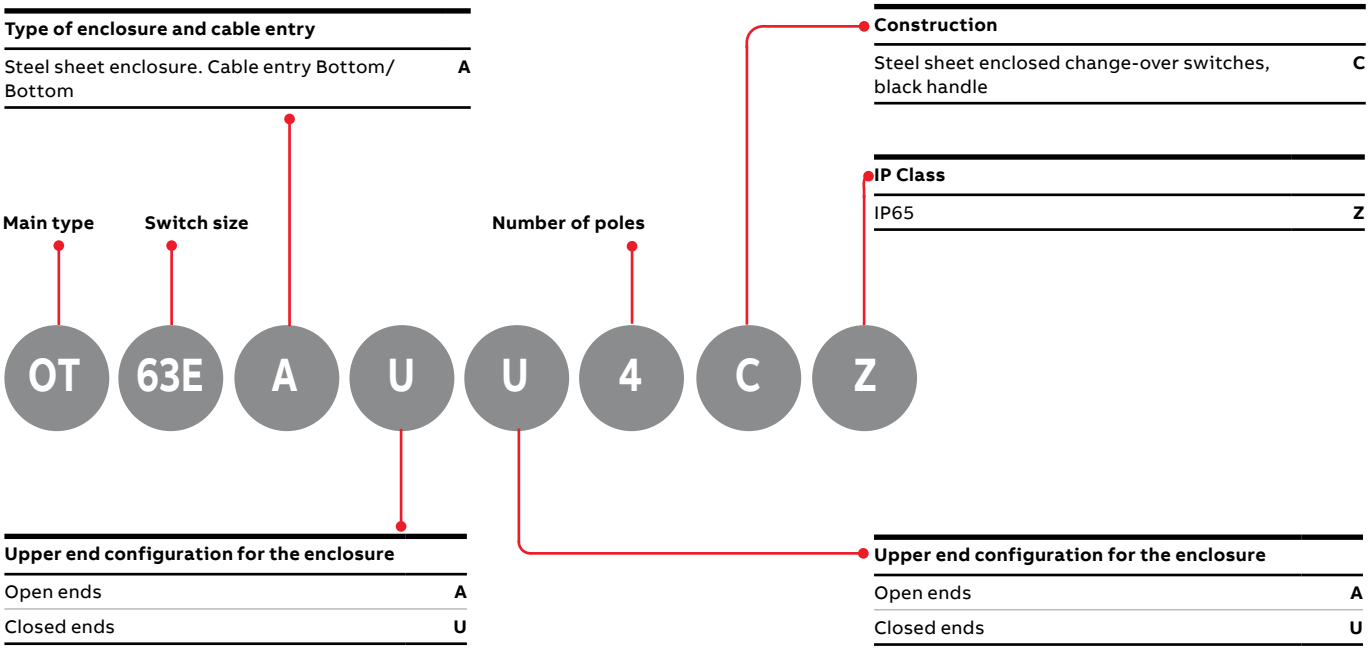

Ordering Information

Steel sheet enclosed change-over switches, 160...630 A

Type keys

Steel sheet enclosed change-over switches, type OT160...630_

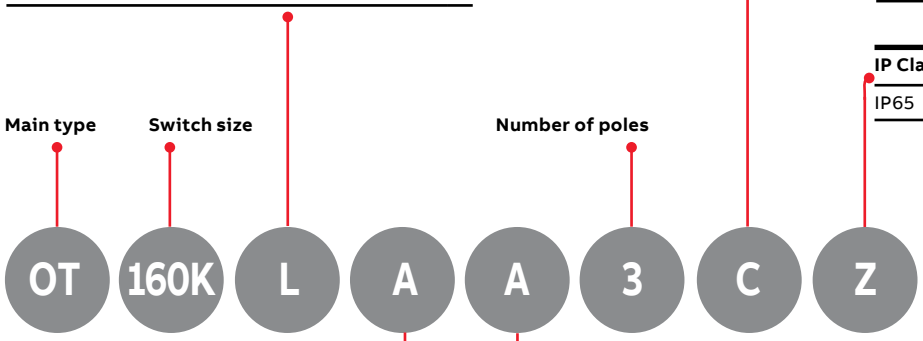

Type of enclosure and cable entry	
Steel sheet enclosure. Cable entry Bottom/ Bottom	**L**

Upper end configuration for the enclosure	
Open ends	**A**
Closed ends	**U**

Construction	
Steel sheet enclosed change-over switches, black handle	**C**

IP Class	
IP65	**Z**

Upper end configuration for the enclosure	
Open ends	**A**
Closed ends	**U**

Ordering information

Steel sheet enclosed change-over switches, 16...80 A



OTL16...40C3M



OTL63...80C3M

Enclosed change-over switches, 3-pole, black handle, IP65

The delivery includes a black handle (I-O-II), N- and PE-terminals. The handle has cover interlock and defeatable interlock function.

Cable entries from top and bottom

Rated current			Dimensions					Weight
AC-22A	AC-23A	Cable	Height	Width	Depth			/unit
415V	415V	outlets/side	mm	mm	mm	Type	Order number	kg
Selector handle Auxiliary contacts included: none • Auxiliary contacts max: 1NO+1NC								
16	16	2xø25.5+ø16.5 / 2xø25.5+ø16.5	200	150	100	OTL16C3M	1SCA022752R6000	1.8
25	20	2xø32.5+ø16.5 / 2xø32.5+ø16.5	200	150	100	OTL25C3M	1SCA149138R1001	1.6
40	23		200	150	100	OTL40C3M	1SCA149139R1001	1.6
Pistol handle Auxiliary contacts included: none • Auxiliary contacts max: 1NO+1NC								
63	63	2xø50.5+ø16.5 / 2xø50.5+ø16.5	300	200	135	OTL63C3M	1SCA149140R1001	4.3
80	80		300	200	135	OTL80C3M	1SCA149141R1001	4.3

Cable knock-outs as standard, compression glands and connection bars for parallel connection have to be ordered separately.



OT63EAUU4CZ

Enclosed change-over switches, 4-pole, black handle, IP65

The delivery includes a black handle (I-O-II), N- and PE-terminals. The handle has cover interlock and defeatable interlock function.

Cable entries bottom-bottom, IP65

Rated current			Dimensions					Weight
AC-22A	AC-23A	Cable	Height	Width	Depth			/unit
415V	415V	outlets/side	mm	mm	mm	Type	Order number	kg
Blank cable entries includes Auxiliary contacts included: none • Auxiliary contacts max: 2NO+2NC								
63	63	Blank / Blank	400	250	180	OT63EAUU4CZ	1SCA139889R1001	11.5

Ordering information

Steel sheet enclosed change-over switches, 160...630 A



OT200KLAA3CZ



OT400DLAA3CZ

Enclosed change-over switches, 3-pole, black handle, IP65

The delivery includes a black handle (I-O-II), N- and PE-terminals. The handle has cover interlock and defeatable interlock function.

Cable entries from top and bottom

Rated current			Dimensions						
AC-22A	AC-23A	Cable	Height	Width	Depth	Cover flanges included			Weight /unit
415V	415V	outlets/side	mm	mm	mm	[pcs]	Type	Order number	kg
Pistol handle									
Auxiliary contacts included: none • Auxiliary contacts max: 4NO+4NC									
160	160	Open / Open	600	400	230	-	OT160KLAA3CZ	1SCA120677R1001	31.0
250	250		600	400	230	-	OT250KLAA3CZ	1SCA022294R7840	20.0
400	400		800	400	330	-	OT400DLAA3CZ	1SCA022294R8220	31.0

Delivery without cable entries, top and bottom sides are open. Cable entries for C-flanges or for ring-flanges have to be ordered separately, see accessories. These entries are used also for fixing the enclosed switch. Flanges and connection bars for parallel connection have to be ordered separately too.

Ordering information

Steel sheet enclosed change-over switches, 160...630 A


OT160KLAA4CZ


OT400DLAA4CZ


OT630KLAA4CZ

Enclosed change-over switches, 4-pole, black handle, IP65

The delivery includes a black handle (I-O-II), N- and PE-terminals. The handle has cover interlock and defeatable interlock function.

Cable entries from top and bottom, IP65

Rated current			Dimensions					Weight
AC-22A	AC-23A	Cable	Height	Width	Depth			/unit
415V	415V	outlets/side	mm	mm	mm	Type	Order number	kg
Delivery without cable entries, top and bottom sides are open. Auxiliary contacts included: none • Auxiliary contacts max: 4NO+4NC								
160	160	Open / Open	600	400	230	OT160KLAA4CZ	1SCA145966R1001	31.0
200	200		600	400	230	OT200KLAA4CZ	1SCA145968R1001	31.0
400	400		800	400	330	OT400DLAA4CZ	1SCA145972R1001	39.0
570	570		1000	800	330	OT630KLAA4CZ	1SCA145974R1001	48.0

Cable entries for C-flanges or for ring-flanges have to be ordered separately, see accessories. These entries are used also for fixing the enclosed switch-disconnectors. Flanges and connection bars for parallel connection have to be ordered separately too.

Dimension drawings

Steel steel sheet enclosed change-over switches

Enclosed change-over switches OTL16...40C_

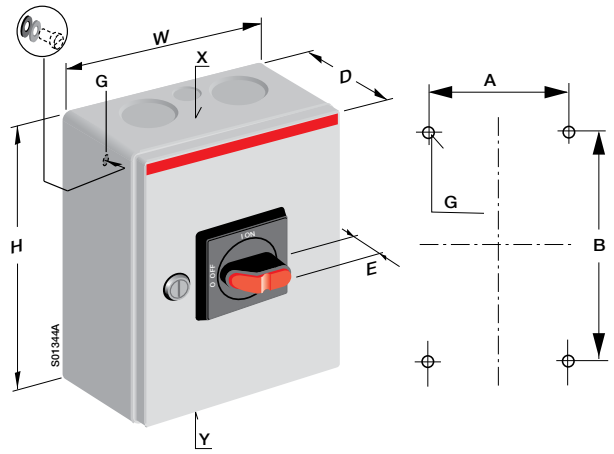

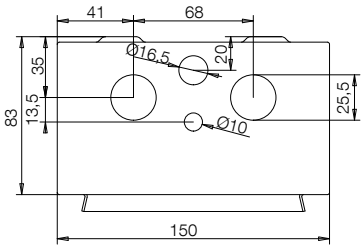

Type	Cable outlets
OTL16...40C3M	2xØ32.5+Ø16.5

Enclosed change-over switches

	Size				Cable entry		Fixing dimensions		
Type	H	W	D	E	X	Y	A	B	G
3-pole									
OTL16C3M	200	150	100	33	2xø25,5+ø16,5	2xø25,5+ø16,5	80	130	6,6
OTL25C3M	200	150	100	33	2xø25,5+ø16,5	2xø25,5+ø16,5	80	130	6,6
OTL40C3M	200	150	100	33	2xø25,5+ø16,5	2xø25,5+ø16,5	80	130	6,6

Enclosed change-over switches OTL63...80C_

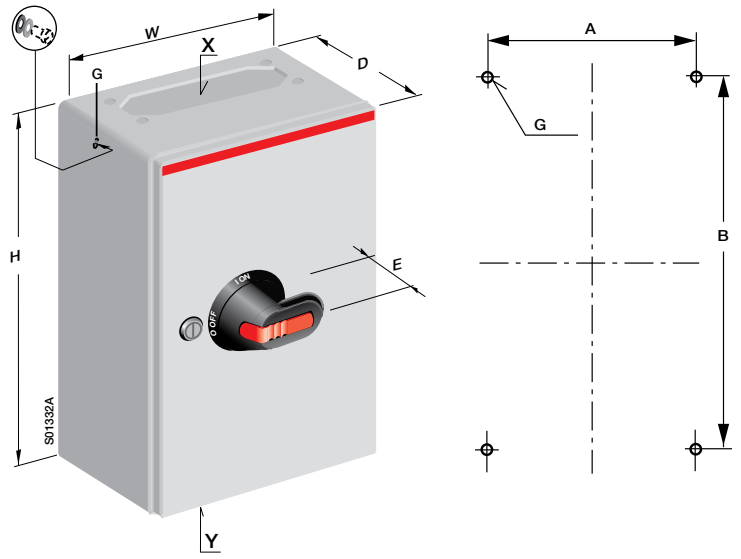

Enclosed change-over switches

	Size				Cable entry		Fixing dimensions		
Type	H	W	D	E	X	Y	A	B	G
3-pole									
OTL63C3M	300	200	135	45	2xø50.5+ø16.5	2xø50.5+ø16.5	130	230	6,5
OTL80C3M	300	200	135	45	2xø50.5+ø16.5	2xø50.5+ø16.5	130	230	6,5

Dimension drawings

Steel sheet enclosed change-over switches

Steel sheet enclosed change-over switches, OT63...630_C

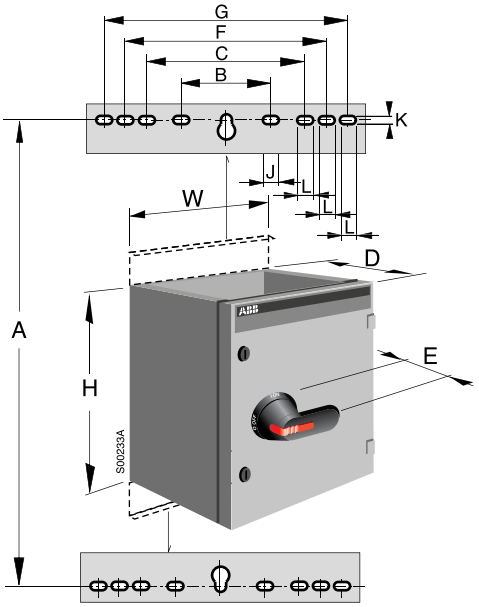

MSC enclosure

Front operated change-over switches

	Size				Fixing dimensions					Fixing holes		
Type	H	W	D	E	A	B	C	F	G	J	K	L
OT63E_4_	400	250	180	45	445	162	-	-	-	27	11	-
OT250K_3_, 4_	800	400	230	45	845	303	-	-	-	35	11	-
OT250K_4_	800	400	330	45	845	303	-	-	-	35	11	27
OT315K_3_, 4_	800	400	330	45	845	303	-	-	-	35	11	27
OT400D_3_, 4_	800	400	330	45	845	303	-	-	-	35	11	27
OT630K_3_, 4_	1000	800	330	45	1045	303	512	612	712	35	11	27

Dimension drawings

Steel sheet enclosed change-over switches

OT160...630_C, cable entries

OEZXPE24R

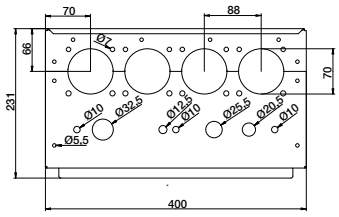

OEZXPE34R

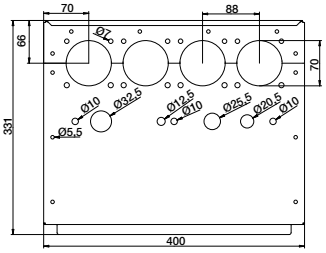

OEZXPE28R

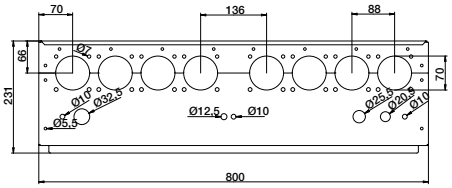

OEZXPE38R

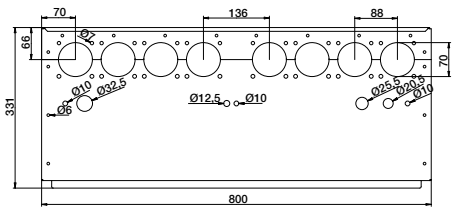

OEZXP240C

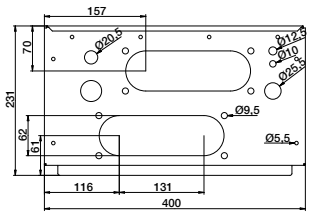

OEZXP340C

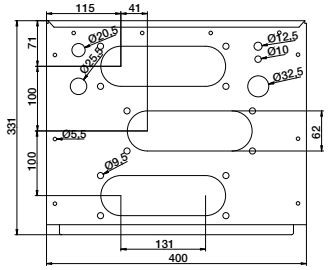

OEZXP280C

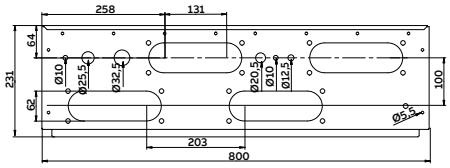

OEZXP380C

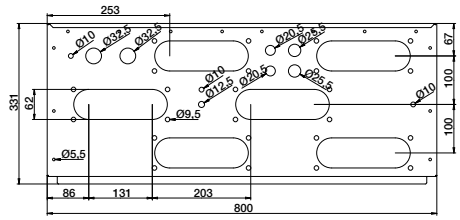



Accessories
Table of contents

196	Selection overview
198	Enlosure accessories and cable outlet accessories
209	Other accessories

Accessories

Selection overview

Plastic enclosures

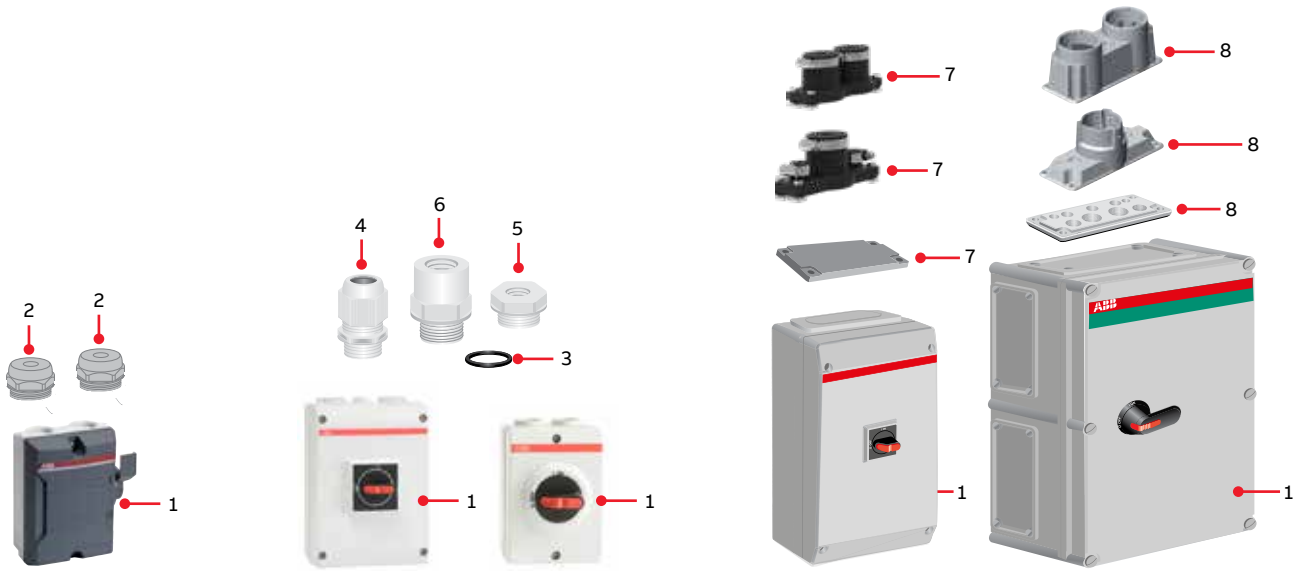

1 Enclosure | 2 Membrane gland/sealing plug (included) | 3 Gasket | 4 Compression gland | 5 Adapter (reducer)| 6 Adapter (expander) | 7 I-Flange | 8 II-Flange

Steel sheet enclosures

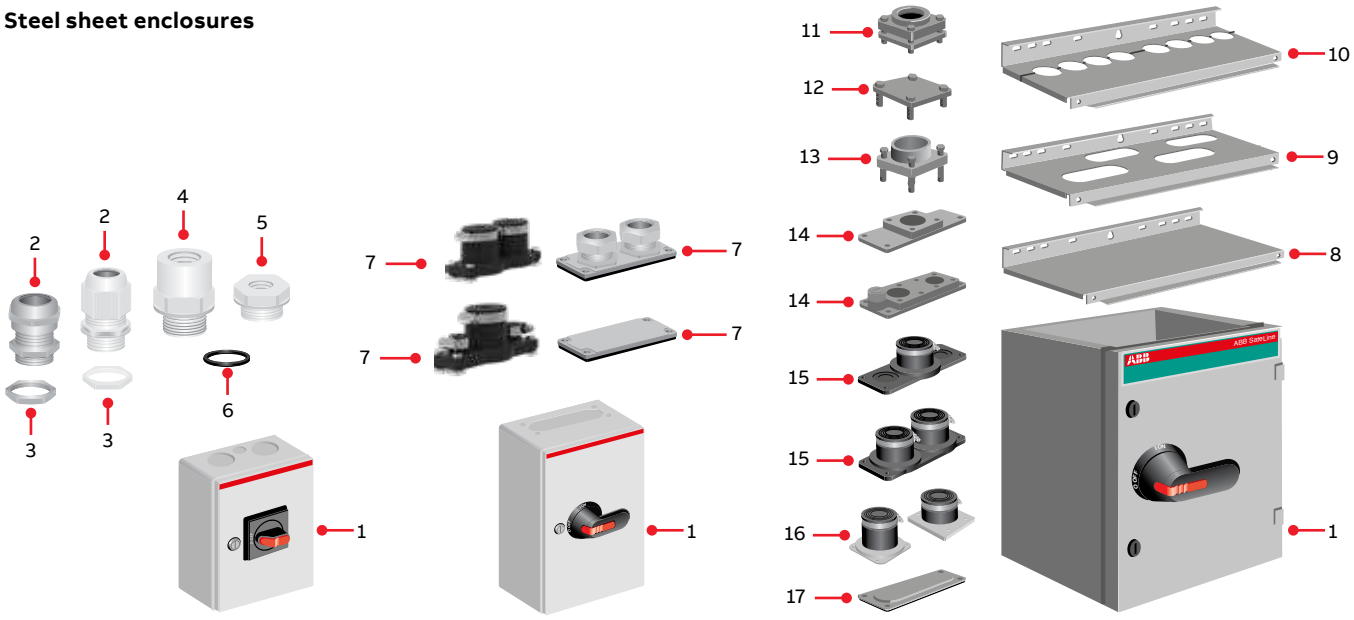

1 Enclosure | 2 Compression gland | 3 Locking nut | 4 Adapter (expander) | 5 Adapter (reducer) | 6 Gasket | 7 B-flange | 8 Blank cable entry | 9 Cable entry with C-flange entries | 10 Cable entry with ring-flange entries | 11 Ring-flange | 12 Ring-flange cover | 13 Plate extension for ring-flanges | 14 Ring-flange adapters for C-flange covers | 15 C-flange | 16 Cable inlets | 17 C-flange cover

Accessories
Selection overview

Stainless steel sheet enclosures

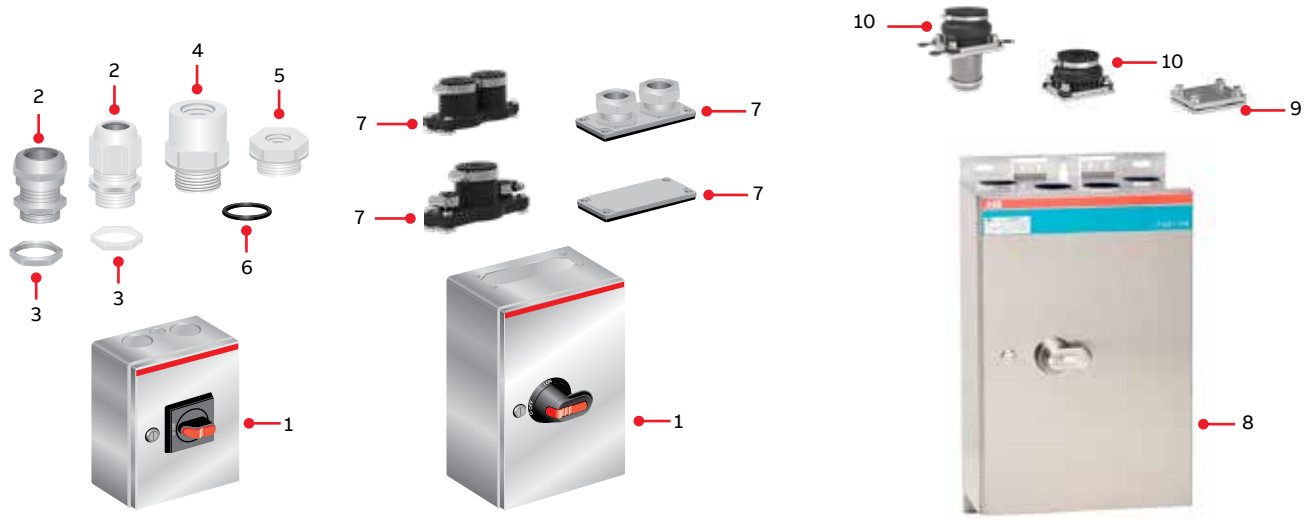

1 Enclosure | 2 Compression gland | 3 Locking nut | 4 Adapter (expander) | 5 Adapter (reducer) | 6 Gasket | 7 B-flange | 8 Acid-proof enclosure | 9 Ring-flange cover | 10 Membrane type cable flange

Aluminium enclosures

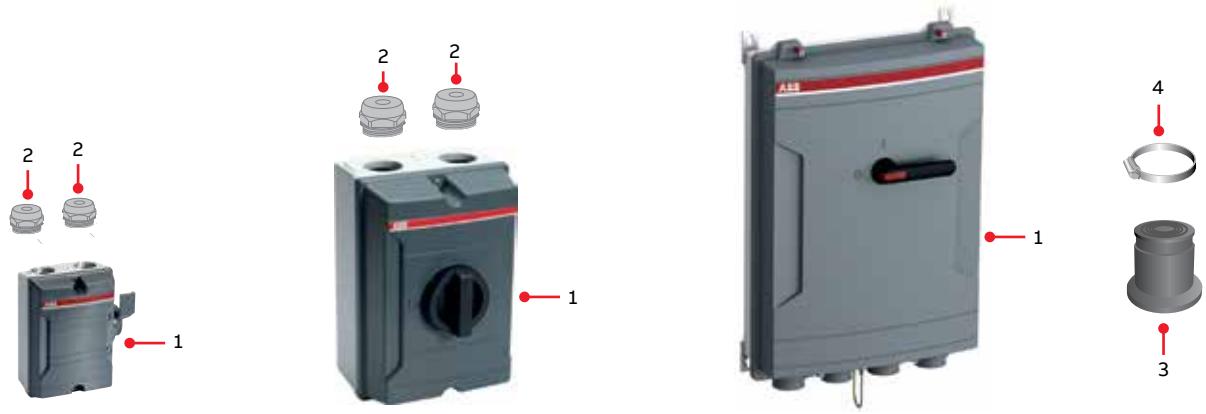

1 Enclosure | 2 Membrane gland/sealing plug (included) | 3 Cable tightening / gland (included) | 4 Hose clamp (included)

Ordering information

Enclosure accessories, cable outlet accessories

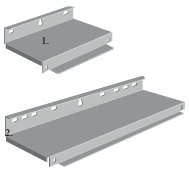

OEZXP__0

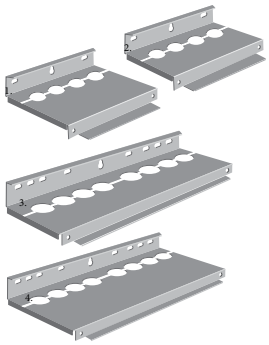

OEZXP__R

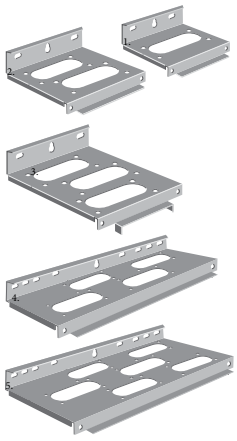

OEZXP__C

Cable entry plates for steel sheet enclosures

These cable entries and plates are also used for fixing the enclosed switch-disconnectors. The flanges have to be ordered separately. The plates are also suitable for EMC applications.

Size of cable entry W x D mm	Number of C-flange entries pcs	Number of ring-flange entries pcs	Type	Order number	Weight kg
Blank entries, no flange entries [3]					
250x180	-	-	OEZXP120[1]	1SCA022277R2350	0.8
400x230	-	-	OEZXPE240	1SCA022399R0040	1.5
400x330	-	-	OEZXPE340	1SCA022399R0120	2.0
800x230	-	-	OEZXPE280	1SCA022399R0210	3.0
800x330	-	-	OEZXPE380	1SCA022399R0390	4.0
Cable entry plates with ring-flange entries, divided[2] [3]					
400x230	-	4	OEZXPE24R	1SCA022399R0470	1.6
400x330	-	4	OEZXPE34R	1SCA022766R7590	2.1
800x230	-	8	OEZXPE28R	1SCA022399R0630	3.2
800x330	-	8	OEZXPE38R	1SCA022399R0710	4.2
Cable entry plates with C-flange entries, compact[2]					
250x180	1	-	OEZXP120C[1]	1SCA022338R5360	0.8
400x230	2	-	OEZXP240C	1SCA022338R5520	1.7
400x330	3	-	OEZXP340C	1SCA022338R5790	2.3
800x230	4	-	OEZXP280C	1SCA022338R5950	3.4
800x330	6	-	OEZXP380C	1SCA022338R6170	4.5
Cable entry gasket set for IP65 switches					
For IP65 switches only, to seal up the cable entry			OEZXX2	1SCA022281R5340	

[1] Includes knock-outs ø 10, 12.5, 20.5 and 25.5
[2] Includes knock-outs ø 10, 12.5, 20.5, 25.5 and 32.5'
[3] E-type plates are both for normal and EMC use.

Ordering information

Enclosure accessories, cable outlet accessories

Cable flanges for steel sheet enclosures

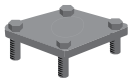

OEZXR0E_

Ring-flange covers with knock-out openings [1)]

Knock-out size ø / mm	Suitable for cable entries	Type	Order number	Weight kg
20.5	OEZXPE_R	OEZXRE020	1SCA022656R8480	0.16
22.5	OEZXPE_R	OEZXRE023	1SCA022399R0800	0.16
25.5	OEZXPE_R	OEZXRE025	1SCA022656R8560	0.16
37	OEZXPE_R	OEZXRE037	1SCA022399R0980	0.16
40.5	OEZXPE_R	OEZXRE040	1SCA022656R8640	0.16

[1)] E-types are for both EMC and none EMC enclosures



OEZXR_

Ring-flange covers with knock-out openings

Knock-out size ø mm	Suitable for cable entries	Type	Order number	Weight kg
20.5	OEZXP_R	OEZXR020	1SCA022656R8130	0.16
22.5	OEZXP_R	OEZXR023	1SCA022277R5290	0.16
25.5	OEZXP_R	OEZXR025	1SCA022656R8210	0.16
37	OEZXP_R	OEZXR037	1SCA022277R5450	0.16
40.5	OEZXP_R	OEZXR040	1SCA022656R8300	0.16

Ordering information

Cable outlet accessories


HIKFL211


HIKFL212

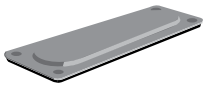
OEZXC 0


HIKFL131


HIKFL132


OEZXR159


OEZXRE159

Cable flanges for plastic and steel sheet enclosures

Mounting set for the flange is included: screws, nuts and sealing gasket or a seal extruded into the flanges. Degree of protection: IP65.

Suitable cable size ø / mm	For cable entries/ Compression glands	Type	Order number	Weight kg
C-flange, rubber				
30...64	See the picture	HIKFL211	1SCA162075R1001	0.49
2x(30...64)		HIKFL212	1SCA162076R1001	0.72
C-flange cover, steel IP65				
-	OEZXP__C	OEZXC0	1SCA022277R6420	0.25
B-flanges, rubber				
16...40	See the picture	HIKFL131*	1SCA162073R1001	0.20
2x(16..40)		HIKFL132*	1SCA162074R1001	0.30
Ring-flanges, rubber				
28...59		OEXR159	1SCA162256R1001	0.25
28...59	EMC rubber flange	OEZXRE159	1SCA162257R1001	0.33

*Set containing stainless steel fastening screws, washers and gasket

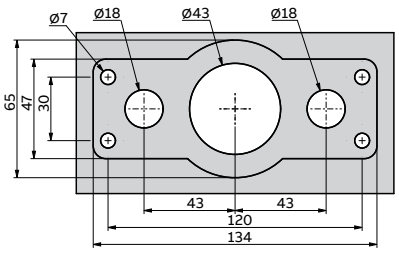

HIKFL131

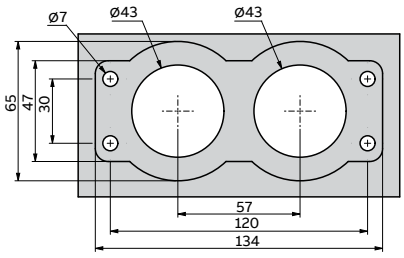

HIKFL132

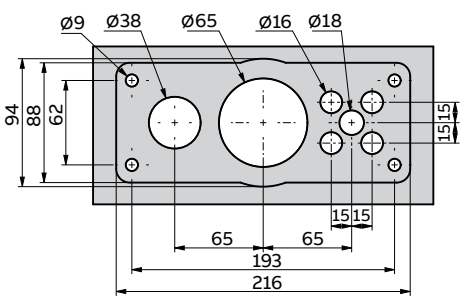

HIKFL211

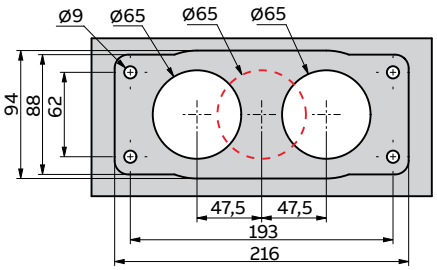

HIKFL212

Ordering information

Cable outlet accessories


BFLR13125


BFLR13225


BFLR13116225


BFLR13140


BFLR13240


BFLR13

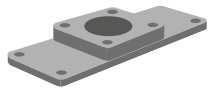
OEZXC1R

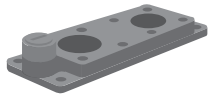
OEZXC2R

Cable flanges for plastic and steel sheet enclosures

B flanges

Mounting set for the flange is included: screws, nuts and sealing gasket or a seal extruded into the flanges. Degree of protection: IP65.

B-flange (FL13) cable entry, aluminium, IP65. For OTL types. Threaded cable entry holes.	Type	Order number	Weight kg
1xM25	BFLR13125	1SCA159210R1001	0.08
2xM25	BFLR13225	1SCA159213R1001	0.07
2xM25 + 1xM16	BFLR13116225	1SCA159208R1001	0.08
1xM32	BFLR13132	1SCA159211R1001	0.07
2xM32	BFLR13232	1SCA159214R1001	0.06
1xM40	BFLR13140	1SCA159212R1001	0.10
2xM40	BFLR13240	1SCA159215R1001	0.09
2xM40 + 1xM16	BFLR13116240	1SCA159209R1001	0.08
Blank plate	BFLR13	1SCA159207R1001	0.08
B-flange (FL13) cable entry, plastic, IP65. For OTP_ and OTL_ types. Threaded cable entry holes.			
1xM25	BFLRP13125	1SCA159218R1001	0.04
2xM25	BFLRP13225	1SCA159220R1001	0.03
2xM25 + 1xM16	BFLRP13116225	1SCA159217R1001	0.03
1xM32	BFLRP13132	1SCA159219R1001	0.03
2xM32	BFLRP13232	1SCA159221R1001	0.03
Blank plate	BFLRP13	1SCA159216R1001	0.04

Ring-flange adapters for C-flange entries, Aluminium alloy

Mounting set for the flange is included: screws, nuts and a seal extruded into the flanges. Ring-flanges have to be ordered separately.

Remarks	Suitable for cable entries	Type	Order number	Weight kg
One hole for ring- flanges and knock-outs ø 21, ø 23, ø 29	OEZXP__C	OEZXC1R	1SCA022281R3560	0.53
Two holes for ring-flanges and one with Pg 16 threads	OEZXP__C	OEZXC2R	1SCA022281R3720	0.55

Ordering information

Cable outlet accessories



OEZXC11L



OEZXC12L

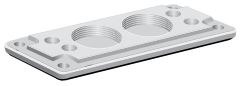

YMF-MB10861SET

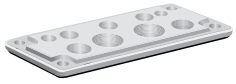

YMF-MB10862SET

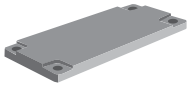

YMF-MB10215



YMF-MK10440



KOT61007



KOT62296



KOT61008



YMF-CS10256



L6

Cable flanges for plastic or steel sheet enclosures

Flange size	Outside diameter of cable mm	Knock-out of control cable mm	Type	Order number	Weight/ unit kg
II/C-flanges For cable entries from top and bottom. Mounting set, flange and cable gasket included.					
II / C	ø 30...55	2 x ø 20,5	OEZXC11L	1SCA022560R5570	0.40
II / C	2 x ø 30...60	2 x ø 20,5 + 2 x ø 10	OEZXC12L	1SCA022560R5730	0.53
Includes sealing gasket and fixing accessories					
		Knock-outs			
II / C		2xM50 + 4xM20	YMF-MB10861SET	1SCA022715R9090	0.14
II / C		2xM32+2xM25+3xM20+2xM16	YMF-MB10862SET	1SCA022715R9170	0.12
I/B-flanges For cable entries from top and bottom. Mounting set, flange and cable gasket included (OEZXB).					
I / B	Cover plate		YMF-MB10215	1SCA022191R2170	0.05
Screw (plastic coated head) 4 pcs /cover plate			YMF-MB10345	1SCA010352R7030	
Nut, 4 pcs /cover plate			FGNSUM6X	1SCA010234R6620	

Cable flanges for stainless steel enclosures

Flange type	Outside diameter of cable mm	Type	Order number	Weight/ unit kg
Membrane type cable flange	27...66	KOT61007	1SCA101607R1001	0.40
Membrane type cable flange for EMC-applications	27...57	KOT62296	1SCA125871R1001	0.40
Flange cover, to block remaining flange openings		KOT61008	1SCA101606R1001	0.20

Other accessories for plastic enclosures

Description	Remarks	Type	Order number	Weight kg
Screw	Cover screw for large plastic enclosure	YMF-CS10256	1SCA145742R1001	
Mounting lugs (set of 4pcs.)	Plastic, for wall mounting	YMF-MB10674	1SCA022229R0010	

Padlock unit suitable for all side operated switches

Description	Type	Order number	Weight kg
Shackle for up to 6 padlocks	L6	2CMA144539R1000	

Ordering information

Cable outlet accessories


ESKV20


EMUG12


EMUG32

Compression glands, IP65

Plastic

Thread	Cable DIA mm	Type	Order number	Weight kg
Compression glands				
M12	2-7	ESKV12	1SCA022715R5850	0.01
M16	4,5-10	ESKV16	1SCA022715R5930	0.01
M20	6-13	ESKV20	1SCA022715R6070	0.02
M25	9-17	ESKV25	1SCA022715R6150	0.02
M32	13-21	ESKV32	1SCA022715R6230	0.03
M40	14-28	ESKV40	1SCA022715R6310	0.06
M50	18-35	ESKV50	1SCA022715R6400	0.08
M63	34-48	ESKV63	1SCA022715R6580	0.10
Locking nuts				
Needed if the enclosure holes are not provided with threads.				
M12		EMUG12	1SCA022715R8280	0.01
M16		EMUG16	1SCA022715R8360	0.01
M20		EMUG20	1SCA022715R8440	0.01
M25		EMUG25	1SCA022715R8520	0.01
M32		EMUG32	1SCA022715R8610	0.01
M40		EMUG40	1SCA022715R8790	0.01
M50		EMUG50	1SCA022715R8870	0.02
M63		EMUG63	1SCA022715R8950	0.02

Metallic


EMSKV12


EMMU12

Thread	Cable DIA mm	Type	Order number	Weight kg
Compression glands				
M12	3...6	EMSKV12/5	1SCA022722R2710	0.02
M16	5...9	EMSKV16/5	1SCA022722R2800	0.03
M20	9....13	EMSKV20/6	1SCA022722R2980	0.04
M25	11....16	EMSKV25/7	1SCA022722R3010	0.06
M32	14....21	EMSKV32/8	1SCA022722R3100	0.08
M40	19....27	EMSKV40/8	1SCA022722R3280	0.08
M50	24....35	EMSKV50/9	1SCA022722R3360	0.10
M63	32....42	EMSKV63/10	1SCA022722R3440	0.12
Locking nuts				
Needed if the enclosure holes are not provided with threads.				
M12		EMMU12	1SCA022722R1910	0.01
M16		EMMU16	1SCA022722R2040	0.01
M20		EMMU20	1SCA022722R2120	0.02
M25		EMMU25	1SCA022722R2210	0.02
M32		EMMU32	1SCA022722R2390	0.03
M40		EMMU40	1SCA022722R2470	0.04
M50		EMMU50	1SCA022722R2550	0.05
M63		EMMU63	1SCA022722R2630	0.06

Ordering information

Cable outlet accessories

Compression glands, IP68



ESSKV-416

Stainless

Thread	Cable DIA mm	Type	Order number	Weight kg
Compression glands				
M16	4.5...10	ESSKV-416	1SCA128106R1001	0.01
M25	9...17	ESSKV-425	1SCA125033R1001	0.02
M32	13...21	ESSKV-432	1SCA128107R1001	0.03

Compression glands for ATEX enclosed enclosed switch-disconnectors with auxiliary contact and 'Safety switch' -sticker



EXM16G

Plastic

Thread	Cable DIA mm	Type	Order number	Weight kg
M16	4.5...9	EXM16G	1SCA152891R1001	0.01
M20	7...13	EXM20G	1SCA152892R1001	0.01
M25	10...17	EXM25G	1SCA152894R1001	0.02
M32	13...21	EXM32G	1SCA152896R1001	0.02
M40	17...28	EXM40G	1SCA152899R1001	0.03



EMSKE16

Metallic

Thread	Cable DIA mm	Type	Order number	Weight kg
M16	5...10	EMSKE16	1SCA157031R1001	0.02
M20	6...13	EMSKE20	1SCA157032R1001	0.03
M25	10...17	EMSKE25	1SCA157033R1001	0.04
M32	13...21	EMSKE32	1SCA157034R1001	0.06
M40	16...28	EMSKE40	1SCA157035R1001	0.08

Ordering information

Cable outlet accessories



EMCM16SET ... EMCM85SET

Compression glands, EMC, metallic

Includes the locking nuts. IP67

Thread	Cable DIA mm	Type	Order number
M16	5....10	EMCM16SET	1SCA022713R4000
M20	7.5....14	EMCM20SET	1SCA022713R3610
M25	10...18	EMCM25SET	1SCA022713R3700
M32	16...25	EMCM32SET	1SCA022713R3960
M40	22...32	EMCM40SET	1SCA022734R5040
M50	30...38	EMCM50SET	1SCA114252R1001
M75	54...65	EMCM75SET	1SCA114254R1001
M85	65...77	EMCM85SET	1SCA022727R1760

Enlargement adapter for EMC cable glands

IP67

Thread	Cable DIA mm	Type	Order number
M23/M32	10...16	EMCM25/M32SET	1SCA022722R3790

Compression glands, ATEX, EMC, metallic

Locking nuts excluded. Not needed in aluminium ATEX enclosures. IP67

Thread	Cable DIA mm	Type	Order number
M16	4...8	EXN03MMC6	7TCA297180R0798
M20	4...12	EXN04MMC6	7TCA297180R0799
M25	10...18	EXN05MMC6	7TCA297180R0800
M32	14...24	EXN06MMC6	7TCA297180R0801
M40	22...32	EXN07MMC6	7TCA297180R0802
M50	26...35	EXN08MMC6	7TCA297180R0803



D43585

Expander tube

Includes one tube

	Type	Order number	Weight kg
For OTA/OKA 125A...600A	D43585	1SCA142306R1001	0.1

Ordering information

Cable outlet accessories


KRM16/12


EPN650M32/M40


EPN650M25/M32


EPN550M50/M32


EPN550M50/M40


KEM50/63


EPN720M20/M16


EPN720M25/M16


EPN720M32/M20


EPN720M40/M25


EPN740M32/M40


EADR12


EADR16


EADR20


EADR25


EADR32


EADR50


YJTB3


BVBP-11

Adapters for M-threads

Plastic

Thread	Type	Order number	Weight kg
M16 to M12	KRM16/12	1SCA022749R6090	0.01
M16 to M20	EPN650M16/M20	1SCA103053R1001	0.01
M20 to M12	KRM20/12	1SCA022749R6170	0.01
M25 to M12	KRM25/12	1SCA022749R6980	0.01
M25 to M20	SORPNMPAM25/M20	1SCA022646R4510	0.01
M25 to M32	EPN650M25/M32	1SCA101159R1001	0.01
M32 to M25	SORPNMPAM32/M25	1SCA022646R4600	0.01
M32 to M40	EPN650M32/M40	1SCA101160R1001	0.01
M50 to M40	EPN550M50/M32	1SCA114803R1001	0.02
M50 to M40	EPN550M50/M40	1SCA104355R1001	0.02
M50 to M63	KEM50/63	1SCA114809R1001	0.02

Metallic

Thread	Type	Order number	Weight kg
M20 to M12	EPN720M20/M12	1SCA114806R1001	0.02
M20 to M16	EPN720M20/M16	1SCA114807R1001	0.02
M25 to M16	EPN720M25/M16	1SCA122555R1001	0.02
M25 to M20	EPN720M25/M20	1SCA109748R1001	0.02
M32 to M20	EPN720M32/M20	1SCA109749R1001	0.02
M25 to M32	EPN740M25/M32	1SCA151188R1001	0.02
M32 to M40	EPN740M32/M40	1SCA114810R1001	0.02
M40 to M50	EPN740M40/M50	1SCA150900R1001	0.02
M40 to M25	EPN720M40/M25	1SCA114808R1001	0.02

Gasket

Thread	Type	Order number	Weight kg
M12/ø12,5	EADR12	1SCA114804R1001	0.01
M16/ø16.5	EADR16	1SCA022749R6410	0.01
M20/ø20.5	EADR20	1SCA022749R6500	0.01
M25/ø2w5.5	EADR25	1SCA022749R6680	0.01
M32/ø32.5	EADR32	1SCA101165R1001	0.01
M40/ø40.5	EADR40	1SCA116849R1001	0.01
M50/ø50.5	EADR50	1SCA104353R1001	0.01

Condensation water outlet

Metallic, IP 44

Hole diameter mm	Type	Order number	Weight kg
10	YJTB3	1SCA122170R1001	0.025

Plastic, IP 66

Hole diameter mm	Type	Order number	Weight kg
12	BVBP-11	1SCA022749R6330	0.03

Ordering information

Enclosure accessories


OEZXPK120


OEZXPK240


OEZXPK280


KOT62280


KOT62281


KOT62282


KOT62283


KOT62284


KOT62293


KOT62305


KOT62306


KOT62307

Shields

The shield can be used as a roof to protect the enclosure agaist dust, water etc.

Size Width x Depth pcs	Type	Order number	Units/ type pcs	Weight kg
Steel sheet				
290 x 230	OEZXPK120	1SCA022646R2730	1	1.2
440 x 280	OEZXPK240	1SCA022646R3110	1	2.0
840 x 280	OEZXPK280	1SCA022646R3200	1	3.8
840 x 380	OEZXPK380	1SCA022647R3510	1	4.9
Painted zinc-plated steel sheet				
190x150	KOT62305	1SCA125902R1001	1	0.5
240X185	KOT62306	1SCA125903R1001	1	0.7
205x160	KOT62307	1SCA125905R1001	1	0.5
Stainless steel sheet				
190x150	KOT62282	1SCA125777R1001	1	0.5
240X185	KOT62283	1SCA125776R1001	1	0.7
205x160	KOT62284	1SCA125815R1001	1	0.5
Stainless steel sheet, acid proof				
440X282	KOT62280	1SCA125779R1001	1	1.8
840X382	KOT62281	1SCA125780R1001	1	4.4
840X282	KOT62293	1SCA125816R1001	1	3.4

Ordering information

Enclosure accessories

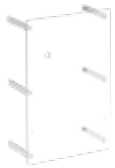

OEZXZ16SET/MOD



OEZXZ17SET/MOD



OEZXZ18SET/MOD

Touch protection

The protection cover will improve the electrical safety. Includes all fixing accessories.

Suitable for enclosed switches	Cable entry	Type	Order number	Size of steel sheet enclosure	Protection cover	Number of fixing brackets / protection cover
				mm	mm	pcs
OT90GAU_, OT90GUU_, OT125GAU_, OT125GUU_,	Down/Down	OEZXZ16SET/MOD	1SCA117365R1001	400X400	360X360	4
OT160EVA_3_, OT160EVU_3_, OT200KA_3_, OT200KU_3_, OT160EVS_3_, OT200ES_3_	Down/Down	OEZXZ17SET/MOD	1SCA117366R1001	600x400	560x360	6
OT250KA_3_, OT250KU_3_, OT250ES_3_, OT250EN_3_	Down/Down	OEZXZ18SET/MOD	1SCA117367R1001	800x400	760x360	8
OT315KA_3_, OT315KU_3_, OT400DA_3_, OT400DU_3_, OT315ES_3_, OT400ES_3_	Down/Down	OEZXZ19SET/MOD	1SCA117368R1001	800x400	760x360	8
OT630KA_3_, OT630KU_3_, OT800EA_3_, OT800EU_3_, OT630ES_3_, OT800ES_3_	Down/Down	OEZXZ20SET/MOD	1SCA117369R1001	1000x800	960x760	13
OT1000BA_3_, OT1000BU_3_, OT1250EA_3_, OT1250EU_3_, OT1000ES_3_, OT1250ES_3_	Down/Down	OEZXZ21SET/MOD	1SCA117370R1001	1200x800	1160x760	16
OT400DL_3_, OT400DT_3_, OT400ER_3_	Up/Down	OEZXZ22SET/MOD		800x400	760x360	8
OT630KBU_	Down/Down	OEZXZ23SET/MOD	1SCA162117R1001	1000x400	960x360	6
OT1000BL_3_, OT1000BT_3_, OT1250EL_3_, OT1250ET_3_, OT1000ER_3_, OT1250ER_3_	Up/Down	OEZXZ24SET/MOD	1SCA141695R1001	1200x800	1160x760	16

Ordering information
Accessories


OZXT1


OZXT2


OZXL1


OZXB2


OZXB3


OZXB4


OZXB5


OZXB8


OZXB9

Terminal clamps for Al and Cu cables

For suitability for steel sheet enclosed enclosed switch-disconnectors with auxiliary contacts and 'Safety switch' -sticker, please check the table 'Cabling' on technical data pages.

Terminal clamp sets for Al- and Cu-cables, insulated versions

Cable cross section mm²	Type	Order number	Unit/ type pcs	Weight kg
16...50 Al, 2.5...50 Cu	OZXT1 [1)]	1SCA022469R6310	3	0.05
16...50 Al, 2.5...50 Cu	OZXT1/1 [1)]	1SCA022469R6490	1	0.02
16...120 Al/Cu	OZXT2	1SCA022620R7200		0.21
2x(16...50) Al/Cu	OZXT3	1SCA022639R0720		0.21

[1)] Max. In = 63A

Terminal clamp sets for Al- and Cu-cables

Cable cross section mm²	Type	Order number	Unit/ type pcs	Weight kg
10...70 Al/Cu	OZXL1	1SCA022439R6770	3	0.18
10...70 Al/Cu	OZXL1/1	1SCA022469R6220	1	0.06
10...70 Al/Cu	OZXL2	1SCA022335R2430	3	0.20
10...70 Al/Cu	OZXL2/1	1SCA022352R3340	1	0.07

OZXB type Al/Cu connectors made of stainless steel

Cable cross section mm²	Type	Order number	Unit/ type pcs	Weight kg
10...70 Al/Cu	OZXB1	1SCA022119R7450	3	0.15
10...70 Al/Cu	OZXB1/1	1SCA022193R9880	1	0.05
25...120 Al/Cu	OZXB2	1SCA022119R7610	3	0.34
25...120 Al/Cu	OZXB2/1	1SCA022194R0200	1	0.12
25...120 Al/Cu	OZXB2L	1SCA022158R7750	3	0.43
25...120 Al/Cu	OZXB2L/1	1SCA022194R0460	1	0.15
95...185 Al/Cu	OZXB3	1SCA022136R8100	3	1.28
95...185 Al/Cu	OZXB3/1	1SCA022194R0620	1	0.13
2x(95...185) Al/Cu	OZXB4	1SCA022137R4760	3	1.71
2x(95...185) Al/Cu	OZXB4/1	1SCA022194R0890	1	0.60
95...185 Al/Cu	OZXB8	1SCA022744R1510	3	0.50
95...185 Al/Cu	OZXB8/1	1SCA022744R1600	1	0.15
95...240 Al/Cu	OZXB9	1SCA022750R3210	3	0.50
95...240 Al/Cu	OZXB9/1	1SCA022750R3300	1	0.14
120...300 Al/Cu	OZXB5	1SCA022137R2470	3	2.22
120...300 Al/Cu	OZXB5/1	1SCA022194R1010	1	0.80
2x(120...300) Al/Cu	OZXB6	1SCA022137R4920	3	3.03
2x(120...300) Al/Cu	OZXB6/1	1SCA022194R1270	1	1.00

Ordering information
Accessories


OZXE21


OZXE20


OZXE19


OZXE46


OXN250


OXN400


OXN800T


OXN1250T

Busbar connections

Cables for steel sheet enclosed switch-disconnectors with auxiliary contact and 'Safety switch' -sticker.

Busbars for parallel connection

Suitable for terminal clamps or busbar	Bolt size	Type	Order number	Units/ type pcs	Weight kg
2x OZXB2, OZXB2L	M8x30	OZXE21	1SCA022161R8810	3	0.3
2x OZXB1	M6	OZXE20	1SCA022161R8650	3	
2x OZXB6 + OZXB5	M12x40	OZXE19	1SCA022162R8020	3	
OZXB2 + OZXB2L, 2 x OZXB9	M8x30	OZXE45	1SCA022809R0240	3	
2 x OZXB9	M10x35	OZXE46	1SCA022809R3180	3	

Terminal boltset for terminal connections

Suitable for terminal clamps or busbar	Bolt size	Type	Order number	Units/ type pcs	Weight kg
OZXE21	M10 x 30	OZXE54/3E	1SCA126309R1001	6	
OZXE45	M8 x 30	OZXE56	1SCA022811R5920	3	
OZXE46	M10 x 35	OZXE57	1SCA022811R6060	3	

Neutral Links

For switches	Ith [A]	Type	Order number	Units/ type pcs	Weight/ unit kg
Detachable, mountable separately to the base plate					
OT160...250	250	OXN250	1SCA022752R9950	1	0.26
OT315_, OT400_	400	OXN400	1SCA022770R3060	1	0.70
OT630_, OT800_	800	OXN800T	1SCA022829R0840	1	0.96
OT1000_...OT1600_	1250	OXN1250T	1SCA104162R1001	1	2.20

Ordering information

Accessories


OHBS2AJ


OHB65J6


OHB95J12


OHB125J12


OHB274J12


OHB45J6


OHB145J12


OHB175J12

Black handles for enclosed switch-disconnectors with auxiliary contact and 'Safety switch' -sticker, plastic

Indication I-O and ON-OFF, IP65. The handles are padlockable with 3 padlocks in O-position, door interlock in I-position, defeatable.

For safety switches	Handle length	Shaft diameter	Type	Order number	Units/ type	Weight/ unit
	mm	mm			pcs	kg
Selector handle for 3- and 4-pole switch-disconnectors, IP65						
OT16_...90E			OHBS2AJ	1SCA022347R4030	1	
Pistol handle for 3- and 4-pole switch-disconnectors, IP65						
OT90...250_	65	6	OHB65J6	1SCA022380R9660	1	0.12
OT315_...400_	95	12	OHB95J12	1SCA022381R0830	1	0.16
OT630_...800_	125	12	OHB125J12	1SCA022381R1560	1	0.17
OT1000_...1250_	274	12	OHB274J12	1SCA115920R1001	1	0.54
Pistol handle for 6-pole switch-disconnectors, IP65						
OT25_...75_	45	6	OHB45J6	1SCA022380R8770	1	0.10
OTP75_...90_	45	6	OHB45J6	1SCA022380R8770	1	0.10
OT90...800_	145	12	OHB145J12	1SCA022381R2110	1	0.17
OT1000_	175	12	OHB175J12	1SCA022381R2450	1	0.18


OHYS2AJ


OHY65J6


OHY95J12


OHY125J12


OHY274J12


OHY45J6


OHY145J12


OHY175J12

Red-yellow handles for enclosed switch-disconnectors with auxiliary contact and 'Safety switch' -sticker, plastic

Indication I-O and ON-OFF, IP65. The handles are padlockable with 3 padlocks in O-position, door interlock in I-position, defeatable.

For safety switches	Handle length	Shaft diameter	Type	Order number	Units/ type	Weight/ unit
	mm	mm			pcs	kg
Selector handle for 3- and 4-pole switch-disconnectors, IP65						
OT16_...90E_			OHYS2AJ	1SCA022353R2840	1	
Pistol handle for 3- and 4-pole switch-disconnectors, IP65						
OT90...250_	65	6	OHY65J6	1SCA022380R9820	1	0.12
OT315_...400_	95	12	OHY95J12	1SCA022381R1050	1	0.16
OT630_...800_	125	12	OHY125J12	1SCA022381R1720		0.17
OT1000_...OT1250	274	12	OHY274J12	1SCA115919R1001	1	0.54
Pistol handle for 6-pole switch-disconnectors, IP65						
OT25_...75_	45	6	OHY45J6	1SCA022380R8930	1	0.10
OTP75_...90_	45	6	OHY45J6	1SCA022380R8930	1	0.10
OT90...800_	145	12	OHY145J12	1SCA022381R2370	1	0.17
OT1000_	175	12	OHY175J12	1SCA022381R2700	1	0.18

Door interlocking in I-position means prevents door from being opened when the handle is in ON-position. It can be defeated in IP65 types to allow authorized personnel access for inspection.

Ordering information
Accessories


OHB45J6


OHB65J6


OHB95J12


OHB45J6E011


OHB65J6E011


OHB145J12


OHB125J12E011

Black handles for enclosed switch-disconnectors, plastic

Indication I-O and ON-OFF, IP65. The handles are padlockable with 3 padlocks in O-position, door interlock in I-position, defeatable.

Suitable for switches	Handle length mm	Shaft diameter mm	Type	Order number	Units/ type pcs	Weight/ unit kg
Pistol handle for 3- and 4-pole enclosed switch-disconnectors, indication I-O and ON-OFF						
OTL/OTR100...125, OT125	45	6	OHB45J6	1SCA022380R8770	1	0.10
OT160...250	65	6	OHB65J6	1SCA022380R9660	1	0.12
OT315...400	95	12	OHB95J12	1SCA022381R0830	1	0.16
OT630...800	125	12	OHB125J12	1SCA022381R1560	1	0.17
OT1000...1600	274	12	OHB274J12	1SCA115920R1001	1	0.54
Pistol handle for 6-pole enclosed switch-disconnectors, indication I-O and ON-OFF						
OTP/OTL/OTR45...63, OTP125, OT125	45	6	OHB45J6	1SCA022380R8770	1	0.10
OT160...250	65	6	OHB65J6	1SCA022380R9660	1	0.12
OT315...800	145	12	OHB145J12	1SCA022381R2110	1	0.17
Pistol handle for 3- and 4-pole enclosed change-over switches, indication I-O-II, padlockable in O-position						
OT16...125_C	45	6	OHB45J6E011	1SCA022594R7110	1	0.10
OT160...250_C	65	6	OHB65J6E011	1SCA022383R2480	1	0.12
OT315...400_C	95	12	OHB95J12E011	1SCA022621R0760	1	0.16
OT630...800_C	125	12	OHB125J12E011	1SCA022589R3340	1	0.17


OHY95J12


OHY45J6


OHY65J6


OHY125J12

Red-yellow handles for enclosed switch-disconnectors, plastic

Indication I-O and ON-OFF, IP65. The handles are padlockable with 3 padlocks in O-position, door interlock in I-position, defeatable.

Suitable for switches	Handle length mm	Shaft diameter mm	Type	Order number	Units/ type pcs	Weight/ unit kg
Pistol type for 3- and 4-pole enclosed switch-disconnectors						
OTL/OTR100...125, OT125	45	6	OHY45J6	1SCA022380R8930	1	0.10
OT160...250	65	6	OHY65J6	1SCA022380R9820	1	0.12
OT315...400	95	12	OHY95J12	1SCA022381R1050	1	0.16
OT630...800	125	12	OHB125J12	1SCA022381R1560	1	0.17
Pistol type for 6-pole enclosed switch-disconnectors						
OTP/OTL/OTR45...63, OTP125	45	6	OHY45J6	1SCA022380R8930	1	0.10

Door interlocking in I-position means prevents door from being opened when the handle is in ON-position. It can be defeated in IP65 types to allow authorized personnel access for inspection. The door is interlocked when the handle is padlocked. Handles padlockable also in ON-position are available on request.

Ordering information

Accessories



OHBS2AJEH



OHM65L6



OHM125L12



OHM175L12

Metallic handles for enclosed switch-disconnectors with auxiliary contact and 'Safety switch' -sticker, stainless steel

Suitable for switches	Handle length mm	Shaft diameter mm	Type	Order number	Units/ type pcs	Weight/ unit kg
Selector handle with metal hasp, IP65 - Indication I-O and ON-OFF						
OT16_...90E_			OHBS2AJEH	1SCA108230R1001	1	0.54
Stainless steel pistol type handles, for 3-pole enclosed switch-disconnectors, IP65 The handles are padlockable with 3 padlocks in O-position, door interlock in I-position, defeatable						
OT25_...75_	65	6	OHM65L6	1SCA022739R1070	1	0.73
OT90...800_	125	12	OHM125L12	1SCA022739R1150	1	0.76
OT1000_	175	12	OHM175L12	1SCA022739R1230	1	0.83
Stainless steel pistol type handles, for 6-pole enclosed switch-disconnectors, IP65 The handles are padlockable with 3 padlocks in O-position, door interlock in I-position, defeatable						
OT25_...75_	65	6	OHM65L6	1SCA022739R1070	1	0.73
OT90...800_	175	12	OHM175L12	1SCA022739R1230	1	0.83



OHZX12



OHZX13

Metallic hasp for pistol handle

Suitable for switches	Handle length mm	Shaft diameter mm	Type	Order number	Units/ type pcs	Weight/ unit kg
For selector handles			OHZX12	1SCA022836R7650	1	0.10
For pistol handles OHB45_ to OHB175_			OHZX13	1SCA022841R5480	1	0.16

Door interlocking in I-position means prevents door from being opened when the handle is in ON-position. It can be defeated in IP65 types to allow authorized personnel access for inspection

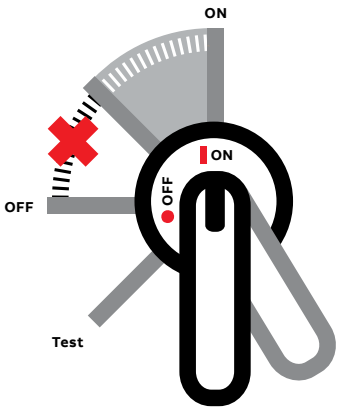

Handle indications and functions

The handle indicates the position of the main contacts of the switch with complete reliability in all situations. If the contacts are welded together, the handle does not reach the OFF-position but remains between ON and OFF, maintaining the door interlock and preventing padlocking.

When operating the switch to the Test-position with a test handle, the test auxiliary contacts change position. The main contacts remain open.

Ordering information
Accessories


OA1G10


OA2G11


OBEA01


OBEA10

Auxiliary contacts

Auxiliary contacts for enclosed switch-disconnectors OT_16_...125F, KSF_25...40, KSE_25...125 and BW_16...40

The auxiliary contacts n.o. open before the main contacts. For the max. number of auxiliary contacts, see the ordering information tables.

For switches	Auxiliary contact	Mounting	Type	Order number	Delivery batch	Weight/ unit
					pcs	kg
OK_,OT_16_...125, KSE 63...125	1no	Right side	OA1G10	1SCA022353R4970	10	0.03
OK_,OT_16_...125, KSE 63...125	1no	Left side	OA7G10	1SCA022673R1140	10	0.03
OK_,OT_16_...125, KSE 63...125	1nc	Left side	OA1G01	1SCA022353R4890	10	0.03
BW_/KSE_16...40, KSF_25...40	1no	Left side	OBEA10	1SCA022190R3000	10	0.01
BW_/KSE_16...40, KSF_25...40	1nc	Left side	OBEA01	1SCA022190R3260	10	0.01
OK_,OT_16_...125F	1no+1nc	Both sides	OA2G11	1SCA022379R8100	10	0.03

Auxiliary contacts for enclosed enclosed switch-disconnectors with auxiliary contact and 'Safety switch' -sticker OTP_, OTE_, OT16...90E, OTR_, OTL_, BWS_ and LBAS_

Snap-on mounting to the switch, the auxiliary contacts (no) open before the main contacts. The type and order number are for one piece.

For safety switch	Auxiliary contact	Mounting to the side of the switch	Type	Order number	Delivery batch	Weight/ unit
					pcs	kg
OTP_, OTE_, OT16...90E_, OTR_, OTL_	1no	Right side	OA1G10	1SCA022353R4970	10	0.03
OTP_, OTE_, OT16...90E_, OTR_, OTL_	1nc	Left side	OA1G01	1SCA022353R4890	10	0.03
LBAS345...390, 475...490, 675_	1no	Right side	OA1G10	1SCA022353R4970	10	0.03
LBAS345...390, 475...490, 675_	1nc	Left side	OA1G01	1SCA022353R4890	10	0.03
OTR_, OTL_, 3- and 4-pole, OTP_6-pole	1no+1nc	Left side	OA2G11	1SCA022379R8100	10	0.06
BWS316...625, LBAS316...425	1no		OBEA10	2CMA144519R1000	10	0.01
BWS316...625, LBAS316...425	1nc		OBEA01	2CMA144520R1000	10	0.01

Ordering information

Accessories



OA1G10



OA3G01

Auxiliary contacts for switch-disconnectors OT160EV...1600 [1]

For the max. number of auxiliary contacts, see the ordering information tables.

For switches	Auxiliary contact	Type	Order number	Delivery batch pcs	Weight/ unit kg
OT160EV...1600	1no	OA1G10	1SCA022353R4970	10	0.03
OT160EV...1600	1nc	OA3G01	1SCA022456R7410	10	0.03

[1] Types _AU for extremely difficult circumstances, even at low voltages. The contacts are gold plated.
[2] Not mountable on the side as the fourth pole.

Auxiliary contacts for safety switches OT90_...1250_

Early break-type contacts (I-0). Additional auxiliary contacts can be mounted to the safety switches, or they can be changed to another contact function. For the max. number of auxiliary contacts, see the ordering information tables. The type and order number are for one piece.

For safety switches	Auxiliary contact	Type[1]	Order number	Delivery batch pcs	Weight/ unit kg
OT90G...125G	1no	OA1G10	1SCA022353R4970	10	0.03
OT90G...125G	1nc	OA1G01	1SCA022353R4890	10	0.03
OT160_...1250_	1no	OA1G10	1SCA022353R4970	10	0.03
OT160_...1250_	1nc	OA3G01	1SCA022456R7410	10	0.03
OT160_...1250_	1no	OA1G10AU	1SCA022436R7910	10	0.03
OT160_...1250_	1nc	OA3G01AU	1SCA022819R5260	10	0.03

[1] Types _AU for extremely difficult circumstances, even at low voltages. The contacts are gold plated.

Ordering information

Accessories, technical data for auxiliary contacts



OA1G01



OA2G11



OBEA01

Technical data of auxiliary contacts

		OA_	OBEA_ and OZXK_
Protection class		IP20	IP20
Rated thermal current Ith / Insulation voltage		16 A / 690 V	10 A / 690 V
Cable cross section, max. / min.		2 x 2.5 / 0.75 mm²	2 x 2.5 / 0.5 mm²
Operational current in different voltages, (IEC 60947-5-1)			
AC-15	230 V	6 A	-
	400 V / 415 V	4 A	-
	690 V	2 A	-
AC-12	120 V / 240 V	-	8 A / 6 A
	400 / 415 V	-	4 A
	480 / 500 V	-	3 A
	690 V	-	2 A
DC-12	24 V / 72 V	10 A / 4 A	5 A / 1.9 A
	125 V / 250 V	2 A / 0.55 A	1.1 A / 0.55 A
	440 V / 500 V	0.1 A / -	0.31 A / 0.27 A
	600 V	-	0.2 A

Performance data of auxiliary contacts according to IEC 60947-5-1

For OA1G_, OA3G_								
AC15			**DC12**				**DC13**	
Ue/[VAC]	**I_e/[A]**		**U_e/[VDC]**	**I_e/[A]**	**P/[W]**		**I_e/[A]**	**P/[W]**
230	6		24	10	240		2	50
400	4		72	4	290		0.8	60
415	4		125	2	250		0.55	70
690	2		250	0.55	140		0.27	70
			440	0.1	44			

For OA1G_, OA3G_	
U_i/[V]	690
U_{imp}/[kV]	4
Pollution degree	3
I_{th}/[A]	16
Cable size	1...2 x 0.75...2.5 mm²
Maximum fuse	16A / gG
NEMA	A600, R300, wire size: 18 - 14 AWG, 1(2)

Function table of auxiliary contacts

Handle position	Main contacts	Aux./Test contacts N.O.	Test indication contact N.O.
Test	Open	Closed	Closed
0	Open	Open	Open
I	Closed	Closed	Open

Ordering information

Accessories, technical data for auxiliary contacts

ON- and OFF-functions of main and auxiliary contacts

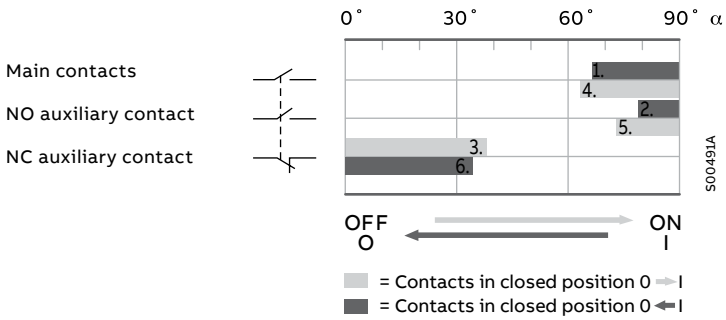

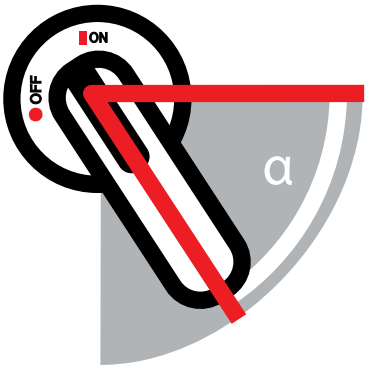

Closing:

1. Main contacts close
2. NO auxiliary contacts close
3. NC auxiliary contacts open

Opening:

4. Main contacts open
5. NO auxiliary contacts open
6. NC auxiliary contacts close

ON- and OFF-functions of main and auxiliary contacts OT160EV...1600

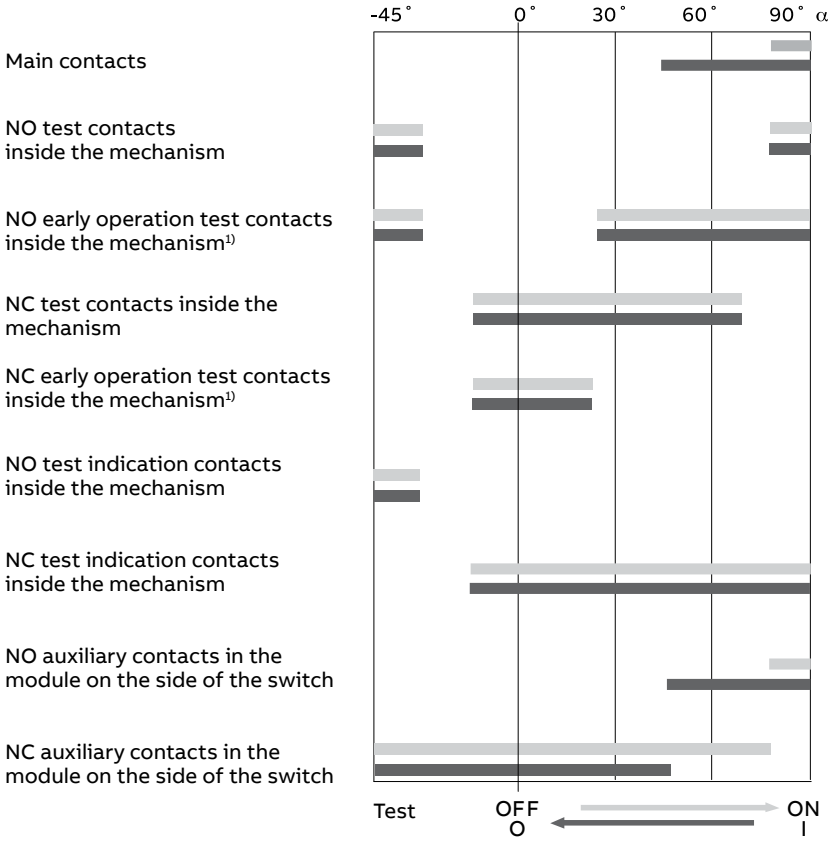

Contact	Contact configuration
OA1G10	1NO
OA3G01	1NC

1) OT1000...1600 only

Ordering information
Accessories


OZXA33


OZXA32


OZXA38


OZXA39


OTZC13


OTZC14


OTZC23


OTZC24


OTZC33


OTZC34


OTZR_

Parallel connection kits for change-over switches

For switches	Number of poles	Max. cable size mm²	Type	Order number	Weight/ unit kg
Connection bars					
Finger protected connection bars for parallel connection of incoming or outgoing terminals. The bars accept additional cables, the maximum size is stated below.					
OT16...32E_3C		6 (fine stranded), 10 (stranded)	OZXA33	1SCA022685R0310	0.02
OT16...32E_4C		6 (fine stranded), 10 (stranded)	OZXA32	1SCA022683R4110	0.03
OT45...63E_3C		25	OZXA38	1SCA022785R2140	0.06
OT45...63E_4C		25	OZXA39	1SCA022790R3820	0.09
Bridging bars					
The bridging bars provide a connection link either on the incoming or outgoing side of the change-over switch.					
OT200...250	3		OTZC13	1SCA022767R6910	0.60
	4		OTZC14	1SCA022767R7040	0.80
OT315...400	3		OTZC23	1SCA022767R7120	0.60
	4		OTZC24	1SCA022767R7210	0.80
OT630...800	3		OTZC33	1SCA022785R7020	1.00
	4		OTZC34	1SCA022785R7110	1.30
Reversing bars					
A reversing switch can be built up by using phase sequence bars in two phases. The kit includes two phase sequence conversion bars. The missing bridging bars must be ordered separately. For example 3-pole switches: one 4-pole standard bridging bar kit is required (one bar for the reversing side, three bars for the other side).					
OT160...250_C			OTZR1	1SCA100352R1001	0.3
OT315...400_C			OTZR2	1SCA104647R1001	0.3
OT600...800_C			OTZR3	1SCA100355R1001	0.4

Additional information
We reserve the right to make technical changes or modify the contents of this document without prior notice. With regard to purchase orders, the agreed particulars shall prevail. ABB AG does not accept any responsibility whatsoever for potential errors or possible lack of information in this document.

We reserve all rights in this document and in the subject matter and illustrations contained therein. Any reproduction, disclosure to third parties or utilization of its contents – in whole or in parts – is forbidden without prior written consent of ABB.

ABB Oy
Smart Power

new.abb.com/low-voltage

Find the address of your local sales organization on the ABB homepage:

www.abb.com/contacts
> Low Voltage Products and Systems

© Copyright 2023 ABB. All rights reserved.
Specifications subject to change without notice.

Catalogue OT4GB, 23-11, 1SCC340015C0201