THE INFORMATION CONTAINED IN THIS DRAWING IS THE SOLE PROPERTY OF L-COM, INC. ANY REPRODUCTION IN PART OR WHOLE WITHOUT THE WRITTEN PERMISSION OF L-COM, INC. IS PROHIBITED.

REVISIONS			
REV	DESCRIPTION	DATE	APPROVED
A	REV A DRAWING RELEASED	01/18/2019	SLI

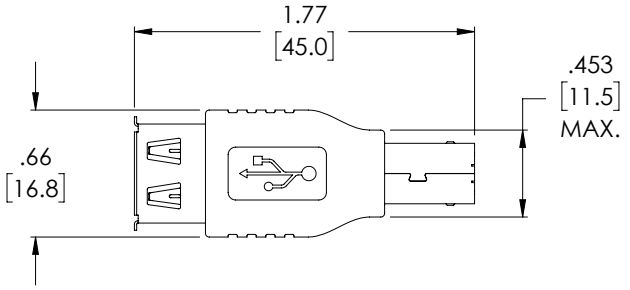

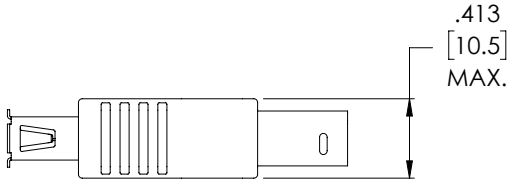

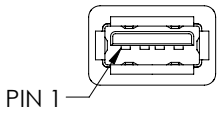

"J1"
USB 2.0 TYPE A RECEPTACLE
CONTACTS: 30µ INCHES
GOLD PLATING

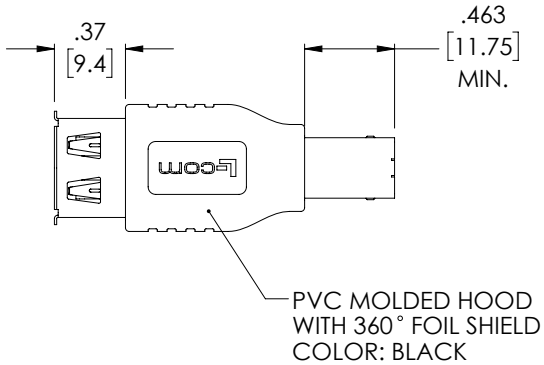

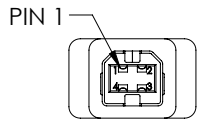

"P1"
USB 2.0 TYPE B PLUG
CONTACTS: 30µ INCHES
GOLD PLATING

WIRING MAP	
"J1"	"P1"
1	1
2	2
3	3
4	4
SHELL	SHELL

NOTES:

1. ADAPTER SHALL BE TESTED FOR CONTINUITY.
2. ADAPTER SHALL BE INDIVIDUALLY PACKAGED IN ACCORDANCE WITH L-COM SPECIFICATION PS-0031.

REGULATORY COMPLIANCE:
CE2011/65/EU(RoHS DIRECTIVE)

UNLESS OTHERWISE SPECIFIED,
DIMENSIONS ARE IN INCHES [mm]
OVERALL CABLE LENGTH TOLERANCE:
≤12 [305] = +1 [25] / -0
>12 [305] ≤60 [1524] = +2 [51] / -0
>60 [1524] ≤120 [3048] = +4 [102] / -0
>120 [3048] ≤300 [7620] = +6 [152] / -0
>300 [7620] = +5% / -0%
ALL OTHER DIMENSIONAL TOLERANCES:
.X = ± .2 [5.08]
.XX = ± .02 [.51]
.XXX = ±.005 [.13]
PROJECTION

APPROVALS	DATE
DRAWN BY SLI	08/20/2018
CHECKED BY BZHANG	08/20/2018
APPROVED BY SPAN	08/20/2018

CONFIGURATION DETAILS OF UNDIMENSIONED FEATURES MAY VARY

COLOR VARIATIONS MAY OCCUR

L-COM Global Connectivity
50 HIGH STREET
NORTH ANDOVER, MA
01845

CATEGORY
USB

PRODUCT DESCRIPTION
ADPT, USB 2.0 A-F/B-M

SIZE	FSCM NO.	DWG. NO.	REV.
A	43321	U2C00042	A

SCALE: NONE | CAD FILE: U2C00042.SLDDRW | SHEET 1 OF 1