OU5080

Retro-reflective sensor

OUP-HPKG/US-100-DPO

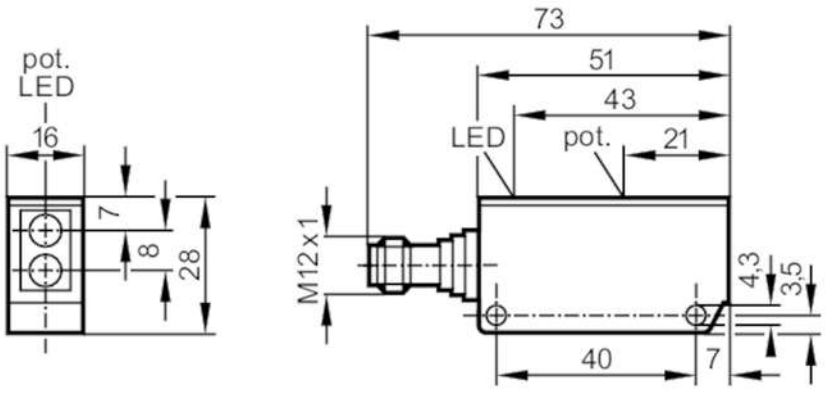

receiver in upper lens
transmitter in lower lens

Product characteristics		
Type of light		red light
Housing		rectangular
Application		
Special feature		polarisation filter
Function principle		Retro-reflective sensor
Electrical data		
Operating voltage	[V]	10...55 DC
Current consumption	[mA]	30; ((24 V))
Protection class		III
Reverse polarity protection		yes
Type of light		red light
Wave length	[nm]	660
Outputs		
Electrical design		PNP
Output function		light-on mode
Max. voltage drop switching output DC	[V]	2.5
Permanent current rating of switching output DC	[mA]	250
Switching frequency DC	[Hz]	160
Short-circuit protection		yes
Type of short-circuit protection		pulsed
Overload protection		yes
Detection zone		
Range referred to prismatic reflector	[m]	0.15...1.5; (Prismatic reflector Ø 80 E20005)
Range adjustable		yes
Max. light spot diameter	[mm]	475

OU5080

Retro-reflective sensor

OUP-HPKG/US-100-DPO

Light spot dimensions refer to		at maximum range
Polarisation filter available		yes
Operating conditions		
Ambient temperature	[°C]	-25...60
Protection		IP 67
Tests / approvals		
EMC		EN 60947-5-2
MTTF	[years]	687
Mechanical data		
Weight	[g]	74.5
Housing		rectangular
Dimensions	[mm]	28 x 16 x 51
Materials		PPO modified
Lens material		glass
Lens alignment		side lens
Accessories		
Items supplied		Angle bracket: 1, E20211
Remarks		
Pack quantity		1 pcs.
Electrical connection		

Connector: 1 x M12; coding: A

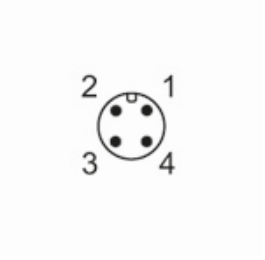

Connection

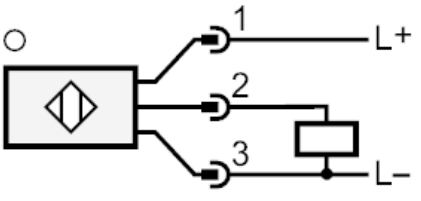

OU5080

Retro-reflective sensor

OUP-HPKG/US-100-DPO

Diagrams and graphs

excess gain graph

