Draw-wire encoder B80 | Performance-Line | Measuring length max. 3 m

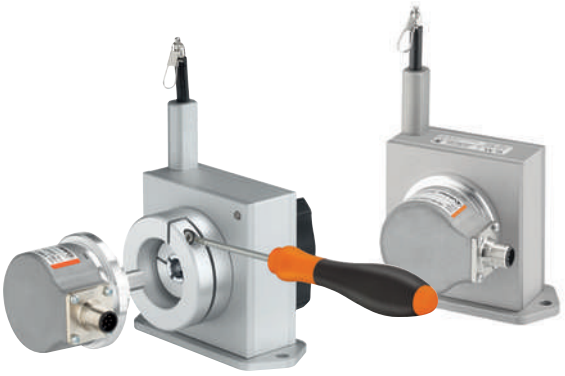

The draw-wire mechanics B80 can be used up to a measuring length of 3 meters.

These draw-wire mechanics may be combined with the proven Kübler Sendix encoders with incremental or absolute interface, as well as with analog sensors.

Analog output | SSI | PROFIBUS | PROFINET | EtherCAT Conformance tested | CANopen | SAE J1939 | EtherNet/IP | IO-Link



Max. acceleration | Long service life | Wide temperaturerange | High protection level | Reverse polarity protection | Integrated swivel | Interchangeable installation

Robust

- The titanium-anodized aluminum housing and the stainless steel wires allow for using the mechanics even in harsh conditions.
- Wear-free wire exit thanks to special plain bearing guide.
- Various wire types and wire fastenings.

Versatile

- High traverse speed, up to 10 m/s.
- High acceleration, up to 140 m/s².
- Quick fastening by means of 2 screws.
- Various connection possibilities available.
- Interchangeable encoders (Interchangeable installation).

Order code with encoder (incremental, absolute)

D8.	X	B1	.	XXXX	.	XX	X	X	.	XXXX
	a			b		c	d	e		f

a *Mechanics*
2 = interchangeable installation [1]
4 = fixed installation [2]

b *Measuring range*
0100 = 1000 mm
0200 = 2000 mm
0300 = 3000 mm

c *Encoder used*
00 = Sendix 5000, incremental
M3 = Sendix M5863, absolute
F3 = Sendix F5863, absolute
63 = Sendix 5863, absolute
M8 = Sendix M5868, absolute
F8 = Sendix F5868 absolute
68 = Sendix 5868, absolute

d *Output circuit*
depends on the encoder used

e *Type of connection*
depends on the encoder used

f *Resolution / Protocol / Options*
depends on the encoder used

Optional on request
- Other measuring ranges
- Cable diameter 1 mm
- Other wire fastening (wire clip = standard): eyelet, M4 thread or carabiner ring
- Modified cable outlet direction
- Sensor protection level IP67
- Improved linearity (0.02 %)

Standard resolutions for draw-wire with incremental encoder Sendix 5000			
Drum circumference [mm]	200	200	200
Pulses / revolution [ppr]	200	2000	4000
Pulses / mm	1	10	20
Resolution [mm]	1	0.1	0.05

Standard resolutions for draw-wire with absolute encoder Sendix M5863 (12 bit ST) or M5868 (12 bit ST, programmable via bus)	
Drum circumference [mm]	200
Pulses / revolution [ppr]	4096
Pulses / mm	20.5
Resolution [mm]	0.05

1) Draw-wire mechanics with standard flange. The encoder can be replaced by the customer.
2) The encoder can only be replaced at the factory.

© Fritz Kübler GmbH, subject to errors and changes. 02/2023

Draw-wire encoder B80 | Performance-Line | Measuring length max. 3 m

Recommended standard variants (with incremental, absolute encoder)

Order no. draw-wire encoder	Mounted encoder	Interface	Power supply	Type of connection	Resolution / Protocol	Option
D8.xB1.xxxx.0054.2000	Sendix 5000 (8.5000.8354.2000)	Push-pull with inverted signal	10 ... 30 V DC	1 x radial M12 connector	2000 ppr	-
D8.xB1.xxxx.M324.G222	Sendix M5863 (8.M5863.3524.G222)	SSI	10 ... 30 V DC	1 x radial M12 connector	4096 ppr / SSI-Gray-Code	-
D8.xB1.xxxx.M824.2122	Sendix M5868 (8.M5868.3524.2122)	CANopen	10 ... 30 V DC	1 x radial M12 connector	CANopen encoder profile DS406 V4.0	-

Other variants (with absolute encoder)

Order no. draw-wire encoder	Mounted encoder	Interface	Power supply	Type of connection	Resolution / Protocol	Option
D8.xB1.xxxx.F326.G223	Sendix F5863 (8.F5863.1226.G223)	SSI	10 ... 30 V DC	1 x radial M12 connector	4096 ppr / SSI-Gray-Code	SET button + status LED
D8.xB1.xxxx.6326.G223	Sendix 5863 (8.5863.1226.G223)	SSI	10 ... 30 V DC	1 x radial M12 connector	4096 ppr / SSI-Gray-Code	SET button + status LED
D8.xB1.xxxx.F82E.2123	Sendix F5868 (8.F5868.122E.2123)	CANopen	10 ... 30 V DC	1 x radial M12 connector	CANopen encoder profile DS406 V3.2	SET button
D8.xB1.xxxx.6822.2123	Sendix 5868 (8.5868.1222.2123)	CANopen	10 ... 30 V DC	2 x radial M12 connector	CANopen encoder profile DS406 V3.2	SET button
D8.xB1.xxxx.M834.3222	Sendix M5868 (8.M5868.3534.3222)	SAE J1939	10 ... 30 V DC	1 x radial M12 connector	SAE J1939	-
D8.xB1.xxxx.M844.4122	Sendix M5868 (8.M5868.3544.4122)	IO-Link	18 ... 30 V DC	1 x radial M12 connector	IO-Link	-
D8.xB1.xxxx.6832.3113	Sendix 5868 (8.5868.1232.3113)	PROFIBUS	10 ... 30 V DC	3 x radial M12 connector	Profibus-DP V0 encoder profile Class 2	SET button
D8.xB1.xxxx.68B2.B212	Sendix 5868 (8.5868.12B2.B212)	EtherCAT	10 ... 30 V DC	3 x radial M12 connector	EtherCAT with CoE 3.2.10	-
D8.xB1.xxxx.F8CN.C122	Sendix F5868 (8.F5868.12CN.C122)	PROFINET IO	10 ... 30 V DC	3 x axial M12 connector	PROFINET encoder profile version 4.2	-
D8.xB1.xxxx.F8AN.A222	Sendix F5868 (8.F5868.12AN.A222)	EtherNet/IP	10 ... 30 V DC	3 x axial M12 connector	EtherNet/IP	-

Order code with encoder (analog, scalable with limit switch function)

D8.X B1 . XXXX . M1 X X . XXXX

a b c d e f

a *Mechanics*
2 = interchangeable installation [1]
4 = fixed installation [2]

b *Measuring range*
0100 = 1000 mm
0200 = 2000 mm
0300 = 3000 mm

c *Encoder used*
M1 = Sendix M5861, absolute [3]

d *Output circuit*
depends on the encoder used

e *Type of connection*
depends on the encoder used

f *Resolution / Protocol / Options*
depends on the encoder used

Optional on request
- Other measuring ranges
- Cable diameter 1 mm
- Other wire fastening (wire clip = standard): eyelet, M4 thread or carabiner ring
- Modified cable and/or connector orientation
- Modified cable outlet direction
- Sensor protection level IP67

Recommended standard variants (with encoder analog, scalable with limit switch function)

Order no. draw-wire encoder	Mounted encoder	Interface	Power supply	Type of connection	Resolution / Protocol	Option
D8.xB1.xxxx.M134.3612	Sendix M5861 (8.M5861.3534.3612)	Analog, 4 ... 20 mA	10 ... 30 V DC	radial M12 connector	12 Bit / 4 ... 20 mA	scalable without limit switch function [4]
D8.xB1.xxxx.M144.4612	Sendix M5861 (8.M5861.3544.4612)	Analog, 0 ... 10 V	15 ... 30 V DC	radial M12 connector	12 Bit / 0 ... 10 V	scalable without limit switch function [4]
D8.xB1.xxxx.M134.3512	Sendix M5861 (8.M5861.3534.3512)	Analog, 4 ... 20 mA	10 ... 30 V DC	radial M12 connector	12 Bit / 4 ... 20 mA	scalable with limit switch function [5]
D8.xB1.xxxx.M144.4512	Sendix M5861 (8.M5861.3544.4512)	Analog, 0 ... 10 V	15 ... 30 V DC	radial M12 connector	12 Bit / 0 ... 10 V	scalable with limit switch function [5]

1) Draw-wire mechanics with standard flange. The encoder can be replaced by the customer.
2) The encoder can only be replaced at the factory.
3) With ccw option.
4) Delivery condition: scaled to measuring range.
Description for scaling and limit switch function see data sheet M5861.
5) Delivery condition: unscaled.
Description for scaling and limit switch function see data sheet M3661.

© Fritz Kübler GmbH, subject to errors and changes. 02/2023

Draw-wire encoder B80 | Performance-Line | Measuring length max. 3 m

Order code with analog sensor (scaled to measuring range)

D8.3B1	.	XXXX	.	XXX	X	.	0000
Type		ⓐ		ⓑ	ⓒ		

ⓐ *Measuring range*
0100 = 1000 mm
0200 = 2000 mm
0300 = 3000 mm

ⓑ *Analog sensor output / supply voltage*
A11 = 4 ... 20 mA / 12 ... 30 V DC
A22 = 0 ... 10 V / 12 ... 30 V DC
A33 = potentiometer 1 kΩ / max. 30 V DC

ⓒ *Type of connection*
1 = axial cable, 2 m PVC
3 = axial M12 connector, 4-pin

Optional on request
- Other measuring ranges
- Cable diameter 1 mm
- Other wire fastening (wire clip = standard): eyelet, M4 thread or carabiner ring
- Modified cable and/or connector orientation
- Modified cable outlet direction
- Sensor protection level IP67
- Increased temperature range -40 °C ... +85 °C and -20 °C ... +120 °C

Accessories for draw-wire encoder	Dimensions in mm [inch]	Order no.
Guide pulley 	Technical data: - mounting bracket (anodized alum.) - guide pulley (plastic POM) - ball bearing (type 696-2R5) Scope of delivery: - 2 x countersunk screws for lateral fixing - 2 x hexagonal screws for fixing on a flat surface 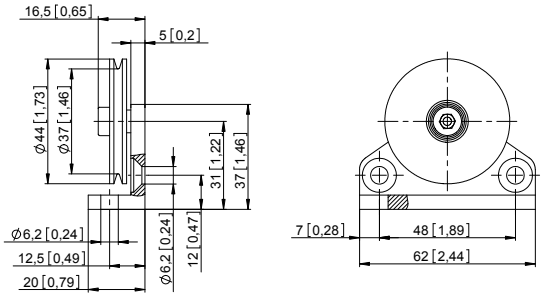	**8.0000.7000.0045**
Extension cable (further on request) 	0.5 m with clip 1.0 m with clip 2.0 m with clip	**8.0000.7000.0051** **8.0000.7000.0052** **8.0000.7000.0054**

Cables and connectors		Order no.
Preassembled cables	M12 female connector with coupling nut, 5-pin, A coded, straight single ended 2 m [6.56'] PVC cable	**05.00.6081.2211.002M**
	M12 male connector with external thread, 4-pin, D coded, straight single ended 2 m [6.56'] PUR cable	**05.00.6031.4411.002M**
Connectors	M12 female connector with coupling nut, 5-pin, A coded, straight (metal)	**8.0000.5116.0000**
	M12 female connector with coupling nut, 5-pin, A coded, straight (metal/plastic)	**05.B-8151-0/9**
	M12 female connector with coupling nut, 5-pin, A coded, right-angle (plastic)	**05.B-8251-0/9**

Further Kübler cables and connectors can be found at: kuebler.com/connection-technology

© Fritz Kübler GmbH, subject to errors and changes. 02/2023

Draw-wire encoder B80 | Performance-Line | Measuring length max. 3 m

Technical data

Mechanical characteristics (draw-wire mechanics)

Measuring range		1000 mm	2000 mm	3000 mm
Extension force	F_{min}	6.9 N	6.4 N	6.9 N
	F_{max}	8.3 N	7.8 N	9.8 N
Speed max.		10 m/s	10 m/s	10 m/s
Acceleration max.		140 m/s²	140 m/s²	140 m/s²
Linearity (of the measuring range)				
with analog sensor		±0.15 %	±0.1 %	±0.1 %
with encoder		±0.05 %	±0.05 %	±0.05 %
		±0.02 % [1]	±0.02 % [1]	±0.02 % [1]
Weight		approx. 750 g [26.45 oz] (dep. on the sensor/encoder used)		
Material	housing	titanium-anodized aluminum		
	wire	stainless steel ø 0.5 mm ø 1 mm can be supplied as a special up to measuring range 1500 mm (other wire types on request)		
Protection acc. to EN 60529		IP65 (sensor)		

Electrical characteristics (digital output)

The electrical characteristics of the draw-wire mechanics with digital output can be found in the data sheets of the encoders.

Approvals

CE compliant in accordance with	
EMC Directive	2014/30/EU
RoHS Directive	2011/65/EU
UKCA compliant in accordance with	
EMC Regulations	S.I. 2016/1091
RoHS Regulations	S.I. 2012/3032

Electrical characteristics (analog sensor, scaled to measuring range)

Version	A22	A11	A33
Analog output	0 ... 10 V	4 ... 20 mA	potentiometer
Output	0 ... 10 V / galv. isolated, 4 conductors	4 ... 20 mA / 2 conductors	1 kΩ
Supply voltage	12 ... 30 V DC	12 ... 30 V DC	max. 30 V DC
Recommended slider current	–	–	< 1 µA
Max. current consumption	22.5 mA (no load)	50 mA	–
Reverse polarity protection	yes	yes	–
Working temperature	-20 °C ... +85 °C [-4 °F ... +185 °F] -40 °C ... +85 °C [-40 °F ... +185 °F] [2]	-20 °C ... +85 °C [-4 °F ... +185 °F] -40 °C ... +85 °C [-40 °F ... +185 °F] [2]	-20 °C ... +85 °C [-4 °F ... +185 °F] -40 °C ... +85 °C [-40 °F ... +185 °F] [2] -20 °C ... +120 °C [-4 °F ... +248 °F] [2]

1) On request for encoder version (see order code **c**):
00 in combination with interchangeable installation (order code **a** = 2) or fixed installation (order code **a** = 4)
F3, 63, F8, 68 in combination with interchangeable installation (order code **a** = 2)
2) Optional on request.

© Fritz Kübler GmbH, subject to errors and changes. 02/2023

Draw-wire encoder B80 | **Performance-Line** | **Measuring length max. 3 m**

Terminal assignment (analog sensor)

Analog sensor **A11** (4 ... 20 mA)			R/I converter				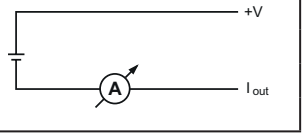
		Signal:	+V	n.c.	I_{out}	n.c.	
	Cable [1]	Core color:	BN	WH	BU	BK	
	M12 connector, 4-pin	Pin:	1	2	3	4	

Analog sensor **A22** (0 ... 10 V DC)			R/U converter				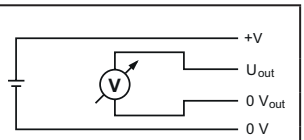
		Signal:	+V	U_{out}	0 V	0 V_{out}	
	Cable [1]	Core color:	BN	WH	BU	BK	
	M12 connector, 4-pin	Pin:	1	2	3	4	

Analog sensor **A33** (Potentiometer 10 kΩ)			Potentiometer				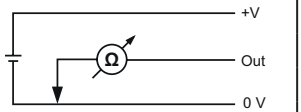
		Signal:	+V	Out	0 V	n.c.	
	Cable [1]	Core color:	BN	WH	BU	BK	
	M12 connector, 4-pin	Pin:	1	2	3	4	

Top view of mating side, male contact base

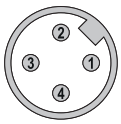

M12 connector, 4-pin

1) Isolate unused cores individually before initial start-up

© Fritz Kübler GmbH, subject to errors and changes. 02/2023

Draw-wire encoder B80 | **Performance-Line** | **Measuring length max. 3 m**

Technology in detail

Operating principle

Construction
The core of a draw-wire device is a drum mounted on bearings, onto which a wire is wound. Winding takes place via a spring-loaded device.

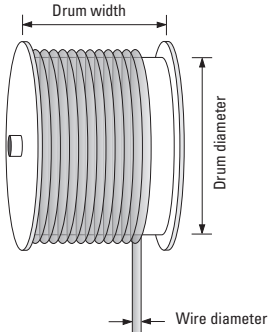

Note
Exceeding the maximum extension length of the draw-wire will lead to damage to the wire and the mechanics.

Wire fastenings

Clip
D8.xx**1**.xxxx.xxxx

M4 thread
D8.xx**A**.xxxx.xxxx

Eyelet
D8.xx**J**.xxxx.xxxx

Carabiner ring
D8.xx**M**.xxxx.xxxx

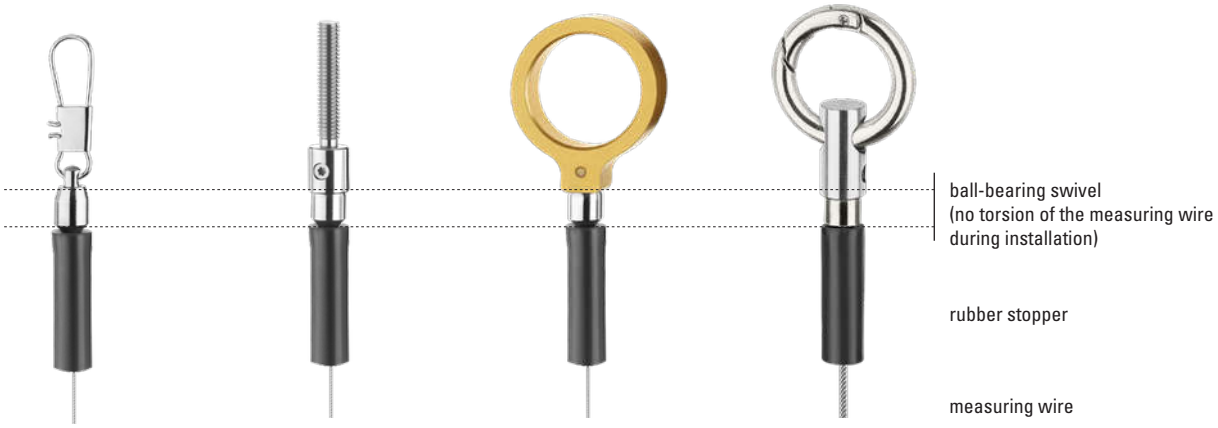

Wire types

- V2A, ø 0.5 mm (standard)

Optional on request:
- V4A, ø 0.51 mm
- Coramid, ø 0.6 mm
- V4A plastic coated, 1.0 mm (V4A = ø 0.81 mm)



Extension wire

For optimum use of the measuring range by extending the wire length, e. g. to allow realizing a pre-extension in the application.
Especially combined with analog interfaces.



© Fritz Kübler GmbH, subject to errors and changes. 02/2023

Draw-wire encoder B80 | **Performance-Line** | **Measuring length max. 3 m**

Application-specific installation possibilities

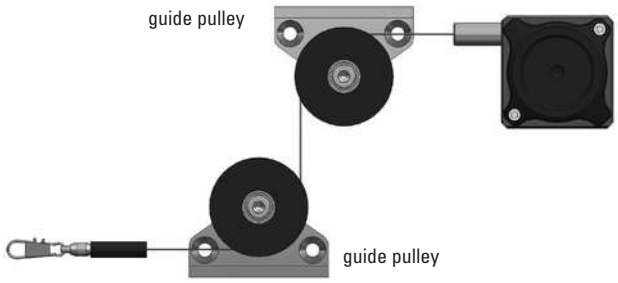

Interchangeable installation

Easy adjustment of the connector or cable orientation. Exchange of individual components possible.
Requirements for encoders:
- clamping flange ø 58 mm
- shaft 10 x 20 mm

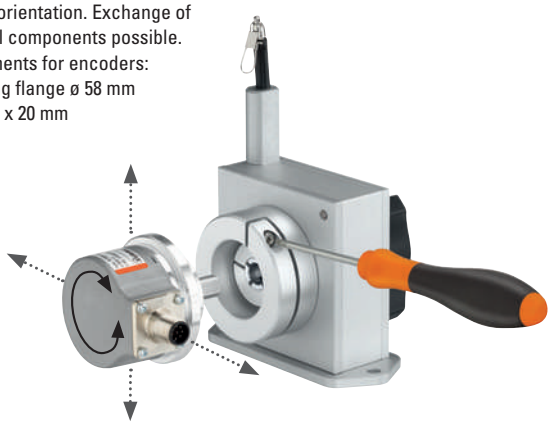

Individual wire outlet

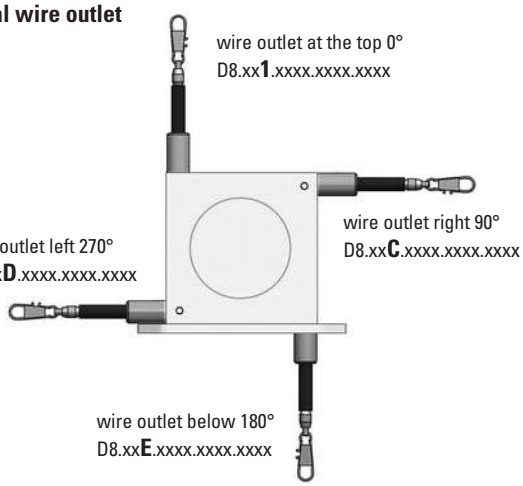

Individual cable / connector orientation

on request

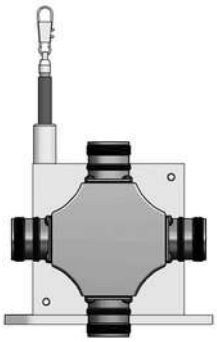

Draw-wire encoder B80 | Performance-Line | Measuring length max. 3 m

Dimensions

Dimensions in mm [inch]

Draw-wire mechanics with encoder
Fixed installation

Dimension D depends on the measuring range of the draw-wire	
Measuring range	**D**
1000 mm	21 [0.83]
2000 mm	21 [0.83]
3000 mm	35 [1.38]

Dimension B depends on the encoder used	
Encoder	**B**
Sendix incremental (5000) D8.4B1.xxxx.00xx.xxxx	55.75 [2.19]
Sendix absolute (F5863) D8.4B1.xxxx.F3xx.xxxx	68.25 [2.69]
Sendix absolute (5863) D8.4B1.xxxx.63xx.xxxx	68.25 [2.69]
Sendix absolute (F5868, CANopen) D8.4B1.xxxx.F8xx.21xx	88.25 [3.47]
Sendix absolute (F5868, EtherNet/IP) D8.4B1.xxxx.F8xx.A2xx	76.75 [3.02]
Sendix absolute (5868) D8.4B1.xxxx.68xx.xxxx	95.35 [3.75]
Sendix absolute (M586x) D8.4B1.xxxx.Mxxx.xxxx	68.45 [2.69]

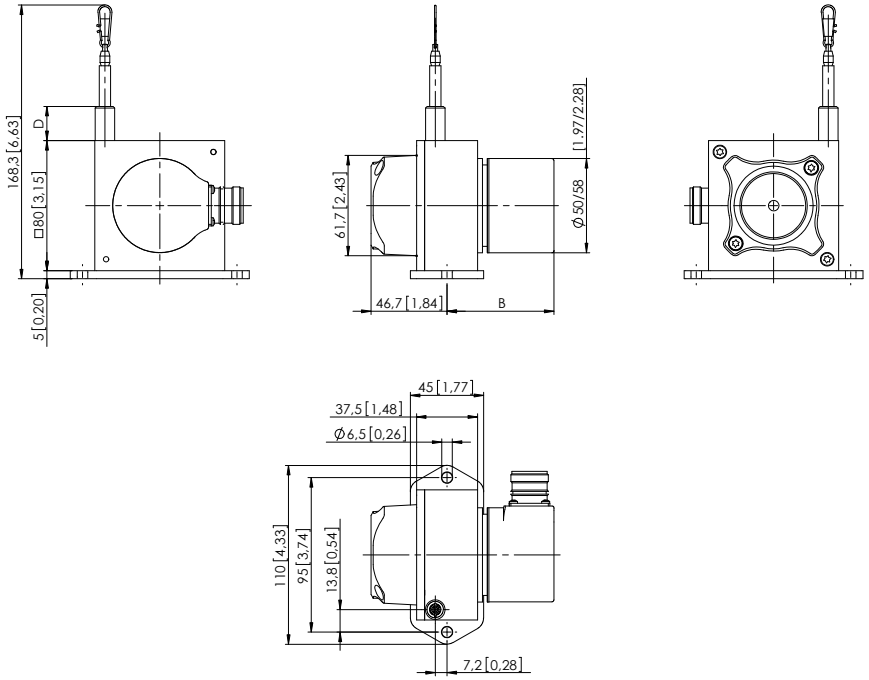

Draw-wire mechanics with encoder
Interchangeable installation, clamping flange

Dimension D depends on the measuring range of the draw-wire	
Measuring range	**D**
1000 mm	21 [0.83]
2000 mm	21 [0.83]
3000 mm	35 [1.38]

Dimension B depends on the encoder used	
Encoder	**B**
Sendix incremental (5000) D8.2B1.xxxx.00xx.xxxx	78.75 [3.10]
Sendix absolute (F5863) D8.2B1.xxxx.F3xx.xxxx	91.25 [3.59]
Sendix absolute (5863) D8.2B1.xxxx.63xx.xxxx	91.25 [3.59]
Sendix absolute (F5868, CANopen) D8.2B1.xxxx.F8xx.21xx	111.25 [4.40]
Sendix absolute (F5868, EtherNet/IP) D8.2B1.xxxx.F8xx.A2xx	99.75 [3.93]
Sendix absolute (5868) D8.2B1.xxxx.68xx.xxxx	118.35 [4.66]
Sendix absolute (M586x) D8.2B1.xxxx.Mxxx.xxxx	91.45 [3.60]

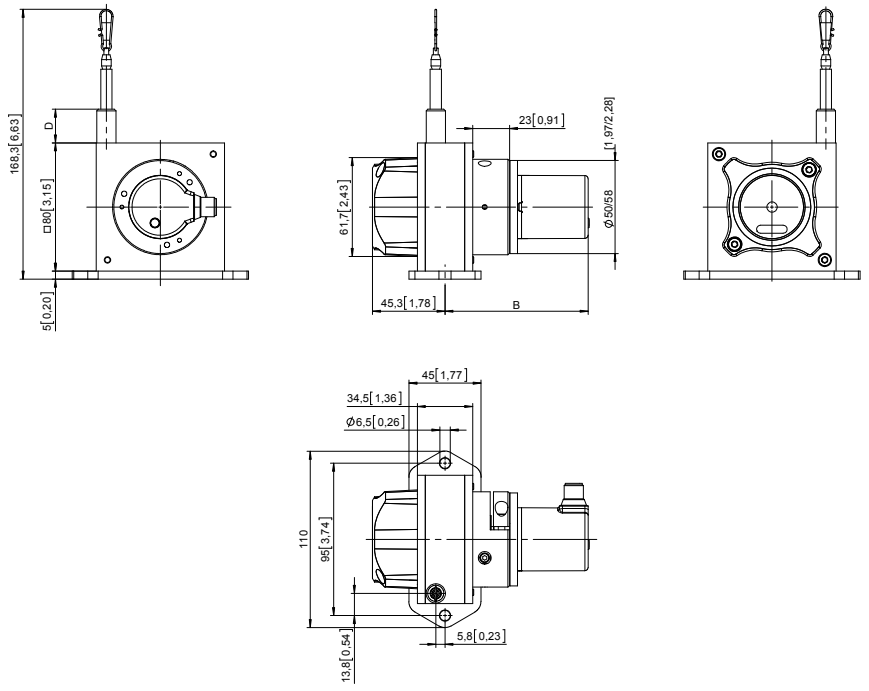

© Fritz Kübler GmbH, subject to errors and changes. 02/2023

Draw-wire encoder B80 | Performance-Line | Measuring length max. 3 m

Dimensions

Dimensions in mm [inch]

Draw-wire mechanics with analog sensor (scaled to measuring range)

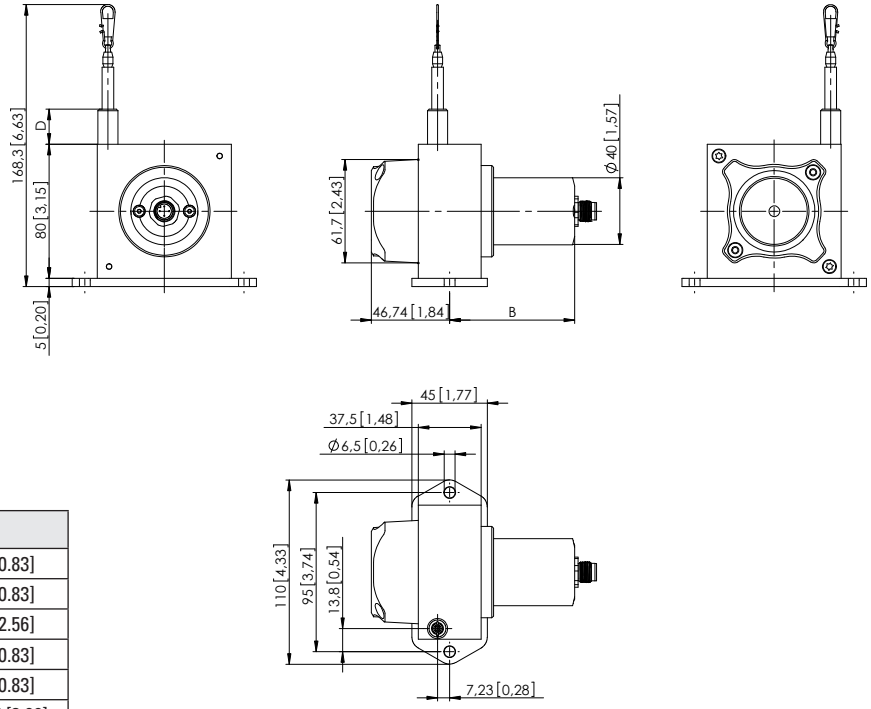

Sensor typ	Measuring length	B	D
Potentiometer	1000 mm	74 [2.91]	21 [0.83]
	2000 mm	74 [2.91]	21 [0.83]
	3000 mm	102.5 [4.04]	65 [2.56]
4 ... 20 mA 0 ... 10 V	1000 mm	87.5 [3.44]	21 [0.83]
	2000 mm	87.5 [3.44]	21 [0.83]
	3000 mm	102.3 [4.03]	78.5 [3.09]

© Fritz Kübler GmbH, subject to errors and changes. 02/2023