C2116161

ROBUST-BOX WIDTH 160, Vers. I

Robust plastic enclosure, ideal for electrical and electronic applications. Case shells either usable as top or base part. Each case part contains threads and fixing towers. Screw fixing outside of the sealing area. Recess of approx. 0.8 mm for use of membrane keyboards.

Supply
2 case shells with sealing, cover strips top and bottom, assembly kit



TECHNICAL DATA

Material	ABS (UL 94 HB)
Protection class	IP 66
Colour	light grey RAL 7035
Standards	RoHS compliant, REACH compliant

The degree(s) of protection listed refer to the empty standard enclosures (without any modifications) and are in compliance with the EN 60529 standard.

Length	160 mm
Width	160 mm
Height	90 mm
PCB length, base	120 mm
PCB width, base	145 mm
PCB length, top	120 mm
PCB width, top	145 mm
Keypad length	122.6 mm
Keypad width	145.5 mm

Please take the dimensions from current parts. These are subject to material- and manufacturing-specific tolerances.

PURCHASING DATA

Weight/1 part	564 g
Customs tariff number (OKW product)	39269097
Country of manufacture	Germany

C2116161

ROBUST-BOX WIDTH 160, Vers. I

CUSTOMISING OPTIONS

What else do you need to create your own personal product? We can supply our enclosures and tuning knobs fully modified to suit your electronic components and design requirements. Please advise for anything else we can do for you.

Customising options for C2116161



Machining



Lacquering



Printing



Laser marking



Decor foils



EMC shielding



Installation / Assembly of accessories

C2116161

ROBUST-BOX WIDTH 160, Vers. I

ACCESSORY "PROTECTION"



C2299040
Security plug
PA 6 (UL 94 HB)
light grey RAL 7035



C2299046
Security kit width 160
PA 6 (UL 94 HB)
light grey RAL 7035



C2306917
Pressure equalisation element
M6x0.75
PA 6 (UL 94 HB)
light grey RAL 7035
IP 56



C2310917
Pressure equalisation element
M10x1
PA 6 (UL 94 HB)
light grey RAL 7035
IP 56



C2320137
Cable grommet
EPDM
light grey RAL 7035
IP 67

ACCESSORY "WALL/HOLDER"



C2204168
Fastening elements to DIN-Rails
PA 6
light grey RAL 7035



C2299028
Wall mounting brackets
PA 6 (UL 94 HB)
light grey RAL 7035



C2299031
Securing hinge for the cover
PP
natural-coloured



C2299088
Hinge
PA 6
light grey RAL 7035

C2116161

ROBUST-BOX WIDTH 160, Vers. I

ACCESSORY "SCREWS"



A0306031
Self-tapping screws 3 x 6 mm
(PZ1)



A0308031
Self-tapping screws 3 x 8 mm
(PZ1)



A0308132
Self-tapping screw 3 x 8 mm
(T10)
Stainless steel

ACCESSORY



C2204162
Cover strips 160
PC (UL 94 HB)
silver grey RAL 7001

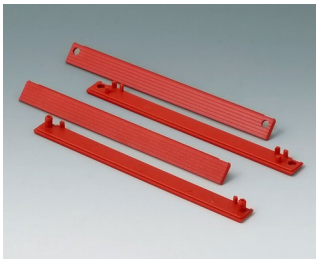

C2204164
Cover strips 160
PC (UL 94 HB)
red RAL 3020



C2204165
Cover strips 160
PC (UL 94 HB)
yellow RAL 1023



C2204166
Cover strips 160
PC (UL 94 HB)
green RAL 6024



C2204167
Cover strips 160
PC (UL 94 HB)
blue RAL 5017



C2299018
Case feet
TPE (UL 94 HB)



C2299068
PCB support
PC (UL 94 HB)
light grey RAL 7035

Subject to technical modification without notice. © by OKW Gehäusesysteme, Buchen/Germany.

Schale mit Feder
shell with tongue

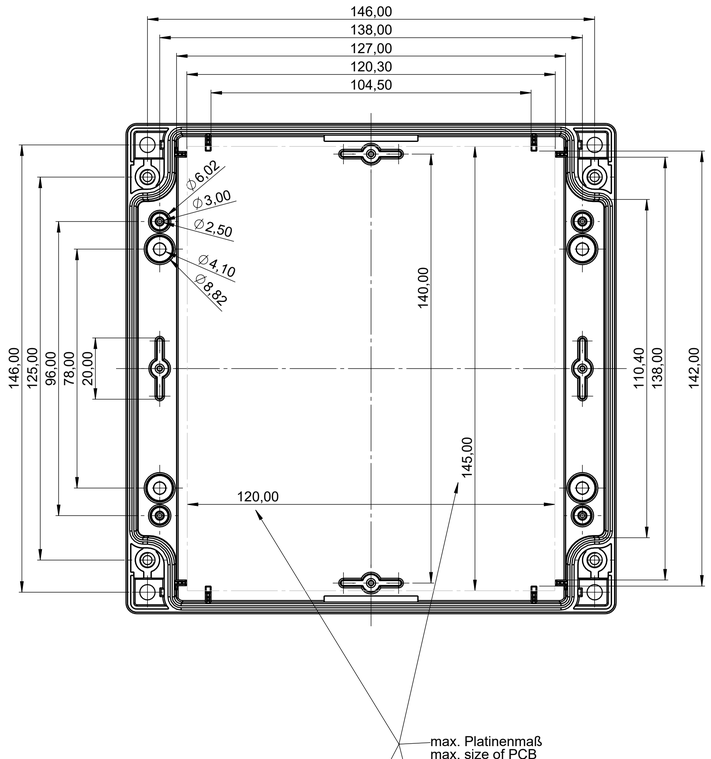

max. Platinenmaß
max. size of PCB

Schale mit Nut
shell with groove

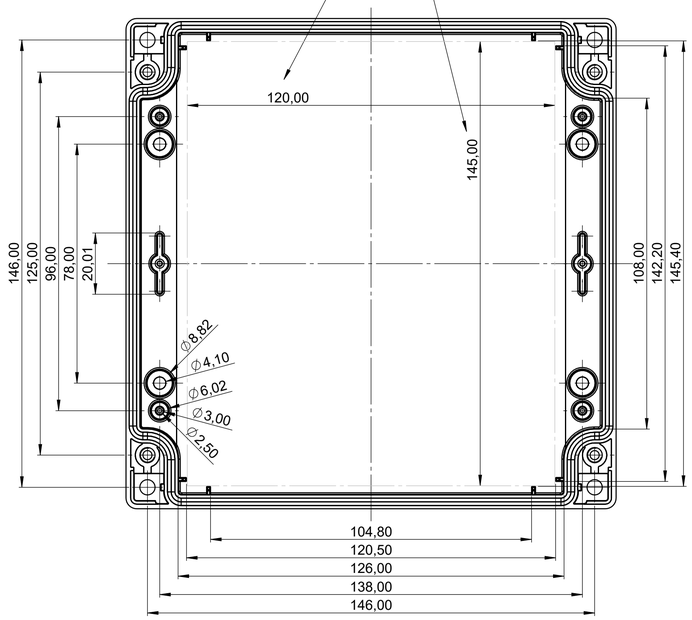

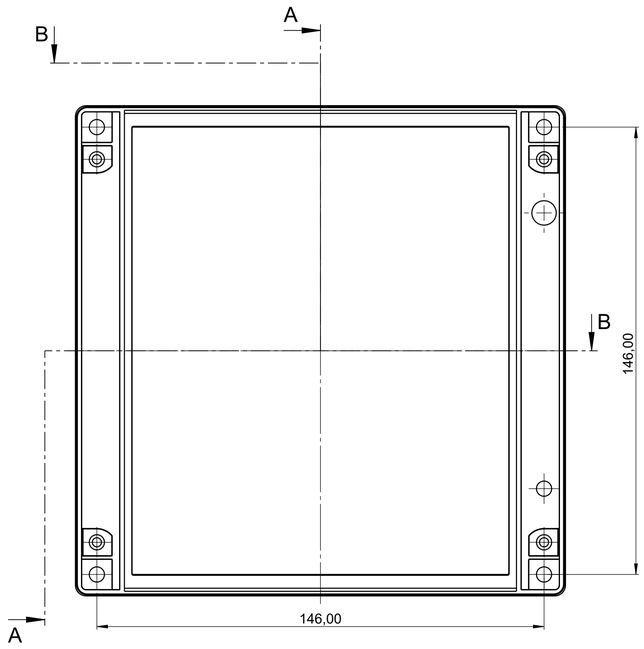

Schale mit Feder
shell with tongue
C 21 61 601
C 21 61 602

Schale mit Nut
shell with groove
C 11 61 601
C 11 61 602

Schnitt A-A

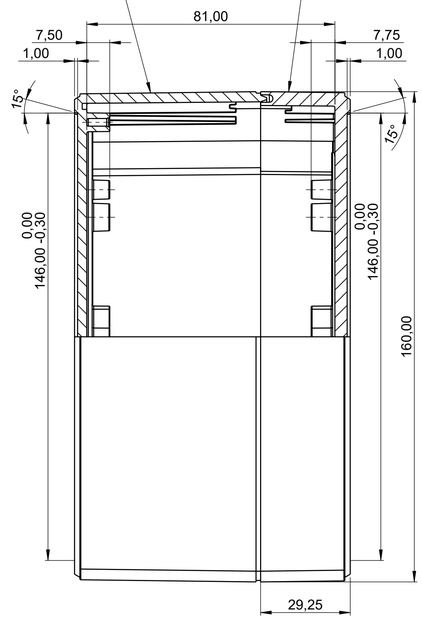

Schnitt B-B

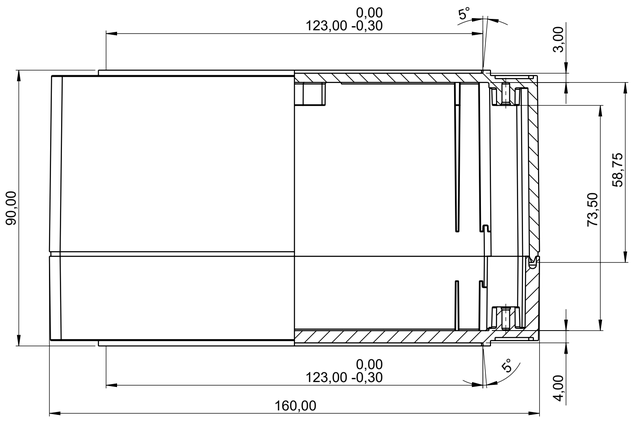

Bitte die Maße an aktuellen Teilen abnehmen.
Diese unterliegen material- und produktionsspezifischen Fertigungstoleranzen.

Please take the dimensions from current parts.
These are subject to material- and manufacturing-specific tolerances.

Informationskopie
wird nicht aktualisiert
Copy for Information
will not be updated

Technische Änderungen vorbehalten. Irrtümer oder Druckfehler begründen keinen Anspruch auf Schadenersatz. Wichtige Einbaumaße bitte direkt mit dem aktuellen Produkt abstimmen.

Subject to technical modification without prior notice. Typographical and other errors do not justify any claim for damages. All dimensions should be verified using an actual moulded part.

Sous reserve de modifications techniques. Toute erreur ou faute d'impression ne justifie aucune demande d'indemnisation. Nous prions les clients de verifier les dimensions des composants avec les boîtiers avant le montage.

Erst. am:	08.07.2020	Toleranzen:	Status:
Erst. von:	J. Farrenkopf	DIN 16901 T130	ENTWICKLUNG
Freig. am:		Volumen:	Zeichnungsart:
Freig. von:			KUNDE
Revision:	01		DIN 6 Teil 2

This document contains proprietary information of OKW Gehäusesysteme GmbH and is tendered subject to the conditions that the information be retained in confidence not be reproduced or copied and not be used or incorporated in any product.

OKW GEHÄUSE SYSTEME

ROBUST-BOX 160
Case complete, 160x 160x 90

C211616*

M 1:1

Für dieses Dokument behalten wir uns alle Urheberrechte vor. Es darf auch auszugsweise weder vervielfältigt noch Dritten in irgendeiner Form zugänglich gemacht werden.

Dateiname: 00008094