(I)GS 63B

Fork photoelectric sensor

en 2020/08/19 50128041-01

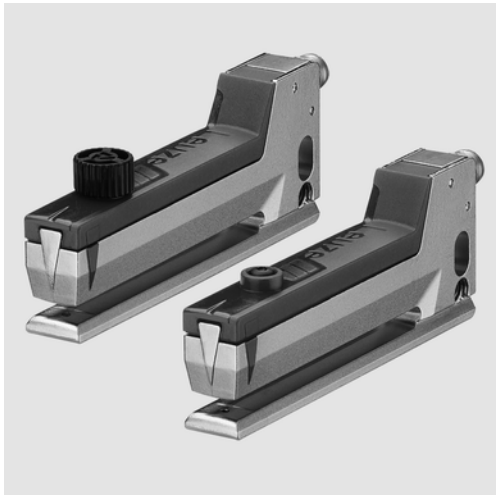

3mm

- Optical fork photoelectric sensor with 3mm fork width and 60mm fork depth for exact detection of labels on base material
- High switching frequency and short response time guarantee very good repeatability
- Slimline-design (reduced fork height) for installation in a groove directly at the dispensing edge
- ALC function (Auto Level Control): highest function reserve through autonomous online optimization of the switching threshold ((I)GS63B/….**3**…)
- Storage of up to 30 teach values in the sensor
- Warning output for indicating teach or function errors (IGS63B…)
- Easy adjustment via lockable teach button or teach input

Accessories: (available separately)

- Clamp BT-GS6X.DT (Part no. 50128583)
- Mounting device BT-GS6X.L (Part No. 50112215)
- Mounting device BT-GS6X.H (Part no. 50123869)

Dimensioned drawing

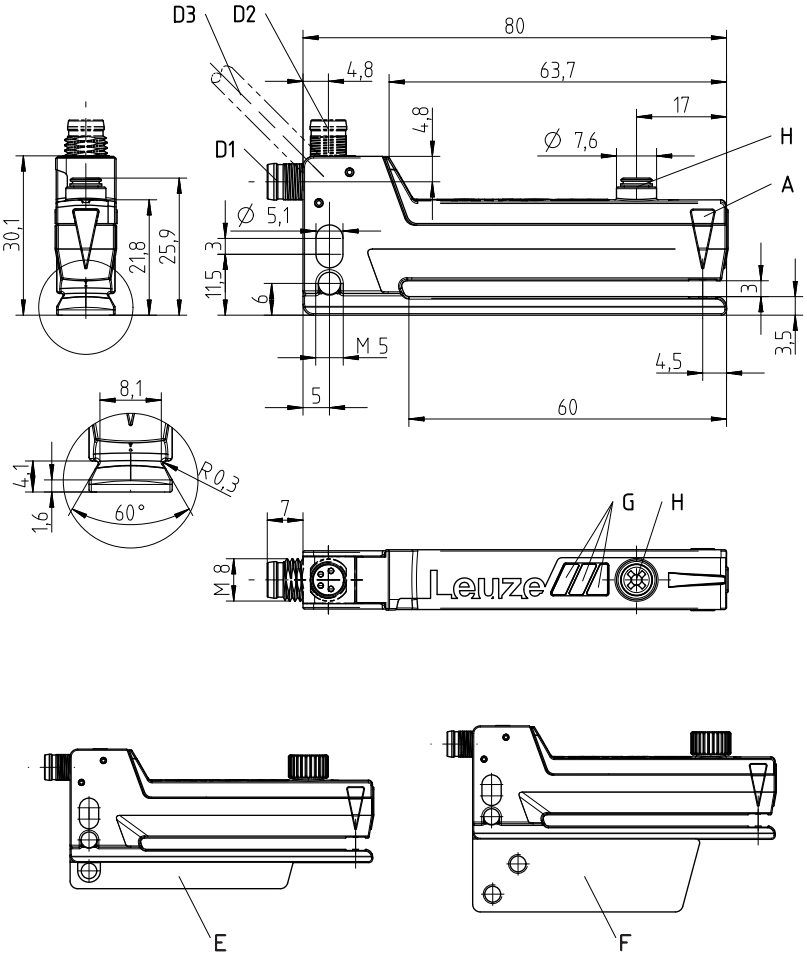

A Label center position
D D1: horizontal connector, D2: vertical connector, D3: cable
E Mounted mounting device BT-GS6X.L (see mechanical accessories)
F Mounted mounting device BT-GS6X.H (see mechanical accessories)
G Indicator diodes
H Teach button or potentiometer

Electrical connection

Connector, 4-pin

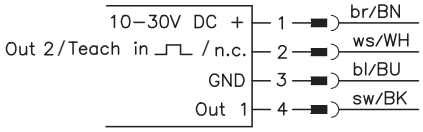

Connector, 5-pin

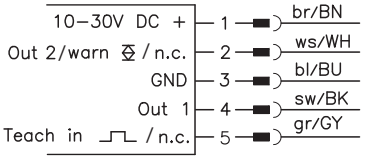

Cable, 5-wire, IGS 63B only

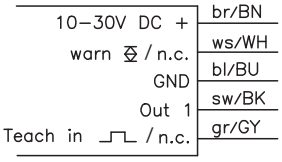

(n. c.: for device version with potentiometer)

We reserve the right to make changes ? DS_IGS63B_en_50128041-01.fm

Technical data

Physical data

Mouth width		3mm
Mouth depth		60mm
Label width		≥ 2mm
Label gap		≥ 2mm
Light source		940nm (infrared light)
Switching frequency		Max. 10kHz
Conveyor speed during teach-in		≤ 20m/min (0.3m/s)
Typ. response time		≤ 50µs
Repeatability		See diagrams
Readiness delay		≤ 300ms acc. to IEC 60947-5-2

Electrical data

Operating voltage U_B [1]		10 … 30VDC (incl. residual ripple)
Residual ripple		≤ 15% of U_B
Open-circuit current		≤ 30mA
Switching output [2]	…/6	1 push-pull switching output
	Switching signal in the label gap	Pin 4: PNP gap signal, NPN label signal
	…/66	2 push-pull switching outputs,
	Switching signal in the label gap	Pin 4: PNP gap signal, NPN label signal Pin 2: PNP label signal, NPN gap signal
	…/6D	1 push-pull switching output
	Switching signal on the label	Pin 4: PNP label signal, NPN gap signal
	…/66D	2 push-pull switching outputs,
	Switching signal on the label	Pin 4: PNP label signal, NPN gap signal Pin 2: PNP gap signal, NPN label signal
Warning output	IGS 63B only…	1 push-pull switching output Pin 4: active low (normal operation high, event case low)
Switching output function		Gap signal/label signal adjustable
Signal voltage high/low		≥ (U_B-2V)/≤ 2V
Output current		≤ 100mA
Capacitive load		≤ 0.2FF [3]

Indicators

Green LED	Ready
Yellow LED	Switching signal in the label gap
Red LED	Teaching error / function error

Mechanical data

Housing base	Diecast zinc; chemically nickel-plated surface (silver)
Upper part of housing	PC plastic, red RAL 3000
Optics	PC plastic
Weight	55g with connector, 100g with cable
Connection type	M8 connector, 4-pin, metal or Cable 2m (cross section 5 x 0.2mm²)

Environmental data

Ambient temp. (operation/storage)	-20°C … +60°C/-30°C … +70°C
Protective circuit [4]	1, 2
VDE protection class	III
Degree of protection	IP 67 with mounted connector
Standards applied	IEC 60947-5-2
Certifications	UL 508, C22.2 No.14-13 [1] [5]

Additional functions

Teach-in input

Active/Not active	≥ 8V/≤ 2V
Activation/disable delay	≤ 0.2ms
Input resistance	Typ. 10kΩ

1) For UL applications: for use in class 2 circuits according to NEC only
2) The push-pull switching outputs must not be connected in parallel
3) Max. permissible input capacitance of a consumer connected to the switching output that can be switched without activation of short-circuit-current limiting.
4) 1=polarity reversal protection, 2=short circuit protection for all outputs
5) These proximity switches shall be used with UL Listed Cable assemblies rated 30V, 0.5A min, in the field installation, or equivalent (categories: CYJV/CYJV7 or PVVA/PVVA7).

Marking on the sensor

- Align the label tape according to the sensor's marker "Label center position".

Diagrams

Repeatability as a function of the conveyor speed

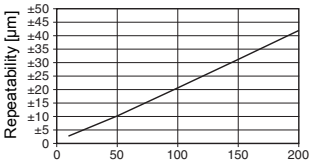

Notes

Intended use:
The fork photoelectric sensor is an optoelectronic sensor for contactless detection of non-transparent labels on any given base material. Depending on the setting, a switching signal occurs in the gap (gap signal) between two successive labels or on the label (label signal).

Observe intended use!

- This product is not a safety sensor and is not intended as personnel protection.
- The product may only be put into operation by competent persons.
- Only use the product in accordance with its intended use.

Order guide

The sensors listed here are preferred types; current information at www.leuze.com.

	Designation	Part no.	Comment
Without warning output	GS63B/6.3-S8	50128004	
	GS63B/6D.3-S8	50128008	
	GS63B/6.3-S8V	50128005	
	GS63B/6D.3-S8V	50128009	
	GS63B/66.3-S8	50143910	2 antivalent switching outputs
	GS63B/6.3,200-S8	50129248	
With warning output	IGS63B/6.3	50128013	
	IGS63B/6.3,200-S12	50128014	
	IGS63B/6D.3,200-S12	50128015	
	SET IGS63B/6D.3,200-S12	50128016	Included with BT-GS6X.L
	SET IGS63B/6D.3BTH,200-S12	50128017	Mounted with BT-GS6X.H
Potentiometer	GS63B/6	50128001	
	GS63B/6,200-S12	50128002	
	GS63B/6.01,200-S12	50128003	Mounted with BT-GS6X.L
	GS63B/6-S8	50128011	
	GS63B/6-S8V	50128012	
	GS63B/6D	50128006	
	GS63B/6D-S8	50128010	
	GS63B/6D,200-S12	50128007	
	GS63B/6D,200-S8	50131604	

Part number code

I GS 63B/ 6D. 3- S8V

Warning function

I	Sensor has warning output

Operating principle

GS	Fork sensor, optical

Series

63B	High quality series with metal housing, B generation

Output function

/6	Push-pull output: PNP signal in the label gap, NPN signal on the label
/66	2 push-pull outputs: Pin 4: PNP signal in the label gap, NPN signal on the label Pin 2: PNP signal on the label, NPN signal in the label gap
/6D	Push-pull output: PNP signal on the label, NPN signal in the label gap
/66D	2 push-pull outputs: Pin 4: PNP signal on the label, NPN signal in the label gap Pin 2: PNP signal in the label gap, NPN signal on the label

Setting

N/A	Potentiometer adjustment
.3	Teach button on the device

Electrical connection

N/A	Device with cable, standard length 2000 mm, cable outlet at 45°
-S8	M8 connector, 4-pin, horizontal plug outlet
-S8V	M8 connector, 4-pin, vertical plug outlet
,200-S12	200 mm cable with M12 connector, 5-pin, cable outlet at 45°
,200-S8	200 mm cable with M8 connector, 4-pin, cable outlet at 45°

ALC (Auto Level Control) function ((I)GS63B/….3…)

In each teach event, the current signal values in the sensor are digitally determined, resulting in the optimum switching threshold being calculated for maximum function reserve. All values are permanently saved, retaining their validity as long as the dynamic parameters of the system remain unchanged and the material is not changed.

Signal changes can result each time the roll is changed, even with labels that are apparently the same. This is caused, for example, by material variations (transmission factor, homogeneity …) or changes of the dynamic system parameters (e.g. tape tension, middle position of the labels, jitter, etc.) that can have a negative affect on the function reserve of the sensor.

With the ALC function, the sensor now automatically corrects the switching threshold in such a way that the maximum function reserve is always available during operation - the sensor works absolutely reliably and free of errors.

The teach event only needs to be repeated if the sensor does not switch following a change of material.

Sensor adjustment via potentiometer for GS 63B

Note: A **removable operating button** is plugged on the potentiometer in ex works. The setting of the fork photoelectric sensor can thereby be performed manually and without the need for a tool. If this is not desired, the operating button can be pulled off – a screwdriver is then necessary for making adjustments.

The following description applies to a fork photoelectric sensor with switching signal in the label gap (GS 63B/**6**…). For device versions with switching signal on the label (GS 63B/**6D**…), the LED indicators are inverted.

Preparation: Remove one or more labels from the base material and advance this blank area into the sensor.

- If the yellow OUT LED does not switch on when the blank area is encountered, increase the sensitivity by turning the potentiometer clockwise until the yellow OUT LED switches on.
- Starting from this setting, turn the potentiometer clockwise another approx. one half turn.
- Now advance the label tape so that a label is in the sensor.
- If set correctly, the yellow OUT LED must now switch off. Reduce the sensitivity by turning counter-clockwise if the LED remains on.
- Finished: if set correctly, the LED changes between gap and label.

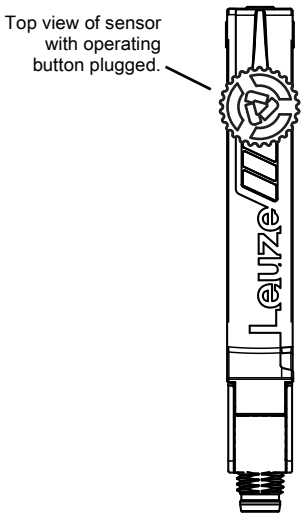

Short instructions for sensor adjustment via teach button for (I)GS 63B (teach-in)

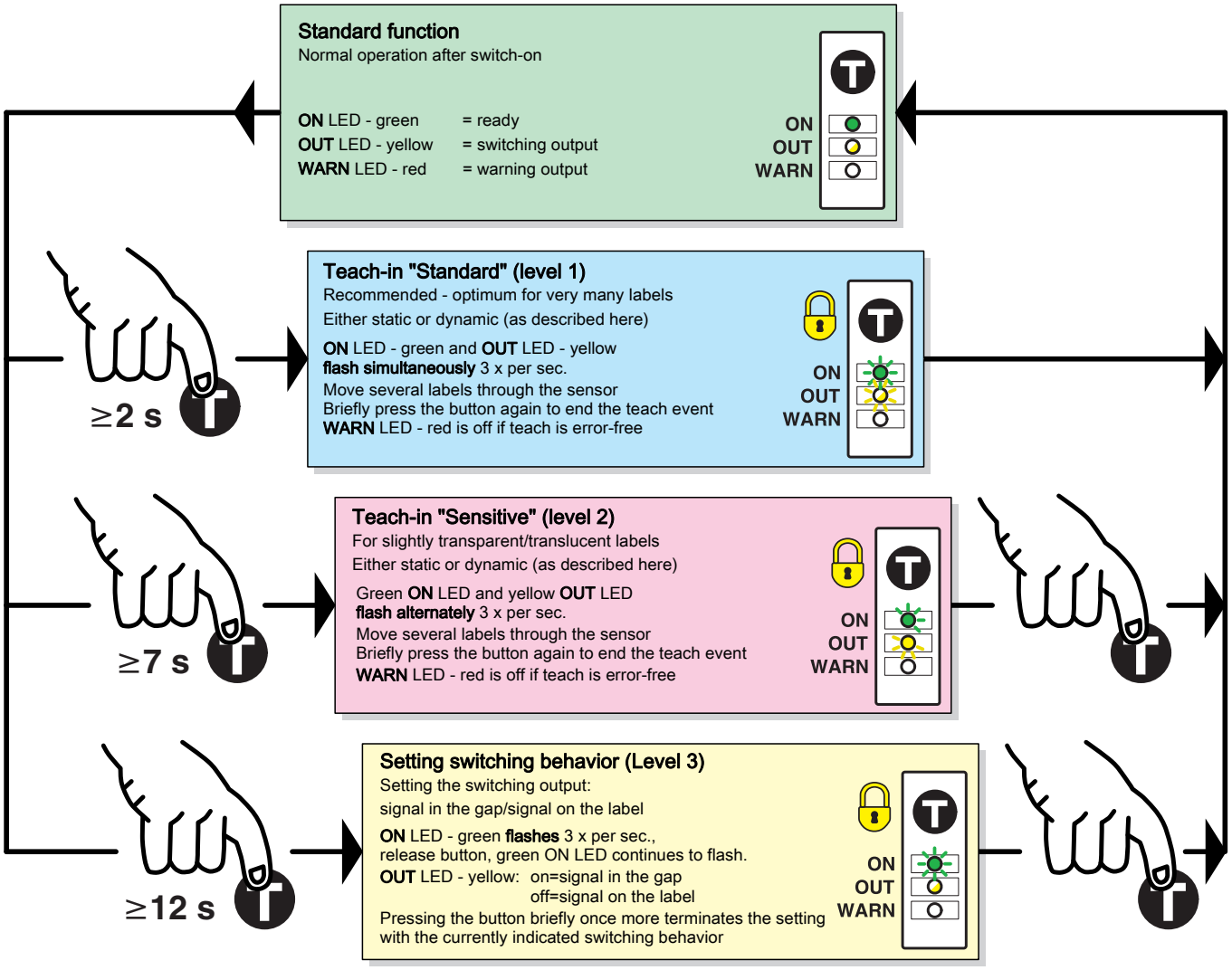

= function lockable through constant application of U_B on the teach input (devices with teach input only)

Standard function for (I)GS 63B

During operation the sensor is always in this function. The sensor detects label gaps with high precision and speed. This is indicated by the yellow LED and the switching output.

Indicators:

ON LED - green	Constantly ON when operating voltage is applied.
OUT LED - yellow	Indicates the switching signal. LED is ON if the sensor detects label gaps. **The display is independent of the output setting.**
WARN LED - red	Is OFF if operation is error-free. If the "Control limit reached" message appears or if the last teach event was faulty, the red LED illuminates.

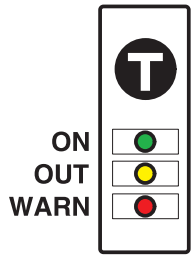

Operation:

The teach button must be pressed for at least 2 seconds to operate the device. The button can be electrically disabled to prevent accidental operation.

Sensor adjustment (teach-in) via teach button for (I)GS 63B

For optimum adaptation to various labels, the fork photoelectric sensor features two different sensitivities. The **standard sensitivity** (2 … 7s) functions with very many labels and is **always the first choice**.

Only in the event of faulty switching on the label, e.g., with slightly **transparent (translucent)** or strongly **inhomogeneous** label materials, is teaching on level 2 "**Sensitive**" (7 … 12s) recommended.

The teach-in can always be performed **dynamically while label tape is passing through** or, **if the label tape cannot be transported, statically**.

Preparation for dynamic teach-in:
Insert label tape into the sensor.

Preparation for static teach-in:
Remove one or more labels from the base material and advance this blank area into the sensor

- **Press the teach button until green and yellow LEDs flash simultaneously.**
- **Release teach button.**
- **During the teach event, the switching output is frozen in the most recently valid state prior to teaching.**
- **Dynamic teach-in:**
  Advance the label tape at a maximum speed of 20m/min through the sensor so that at least 3 … 7 labels pass through the sensor.
- **Static teach-in:**
  Blank area remains at the same position in the sensor.
- **Press the button briefly once more to terminate the teach event, the sensor goes into standard mode.**

If the teach event is faulty (e.g. transmission with insufficiently thick base material), the red LED illuminates, the green and yellow LEDs flash rapidly and the warning output is activated. For error acknowledgment, briefly press the teach button and repeat the teach event. If the fault cannot be rectified, the label material cannot be detected with the (I)GS 63B.

Adjusting the switching behavior of the switching output (signal in the label gap/on the label)

- **Press teach button until only the green LED flashes with 3 Hz.**
- **Release the teach button - the green LED continues to flash, the yellow LED alternates slowly between ON and OFF.**
- **Yellow LED ON = output switches in the label gap**
  Yellow LED OFF = output switches on the label.
- **If the button is pressed again while the LED is ON, the device switches in the label gap. For control purposes, the switching behavior is displayed as long as the button is pressed. If the output is to switch on the label, the button must be pressed while the LED is OFF.**
- **Ready**.

Sensor adjustment (teach-in) via teach input for (I)GS 63B

The following description applies to PNP switching logic!

UTeach	**Not connected**	Internal pull-down resistor pulls the input down to zero	Teach button can be operated; all functions adjustable
UTeach low	**≤ 2V**	Low level	Teach button can be operated; all functions adjustable
UTeach high	**≥ 8V**	High level	Teach button disabled; button has no function
UTeach	**> 2V ... < 8V**	Not permitted	

The device setting is stored in a fail-safe way. A reconfiguration following power failure or switch-off is thus not required.

Line teach while label tape is passing through

Preparation: Insert the label tape in the correct position in the sensor (align the middle of the tape to the sensor marking).

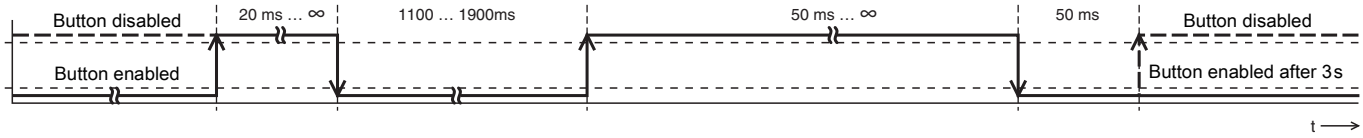

	Pulse only necessary if a low-level was applied previously	Activation of the teach-in: Action starts with the falling edge: t_{Teach} = 1100 … 1900ms	The rising edge starts the teach event. The green and yellow LEDs flash alternately 3x per second as long as the signal is high. Advance the label tape so that several label gaps pass the sensor, thereby allowing the teach values to be determined.	The teach event is concluded with the falling edge. 50ms after the falling edge, the sensor returns to normal operation. The teach button is enabled again after max. 3 s

The red LED illuminates and the warning output is activated if a teaching error occurs (e.g. the label cannot be reliably detected due to insufficient signals).

Regardless of the state, the green LED is on when the teach event is terminated, the yellow LED indicates the current switching state.

Line teach if the label tape cannot be advanced (static teach)

Preparation: Remove one or more labels from the base material and place this blank area in the sensor. The label tape must now not be advanced further.

The process is identical to the line teach with moving label tape.

Adjusting the switching behavior of the switching output – light/dark switching

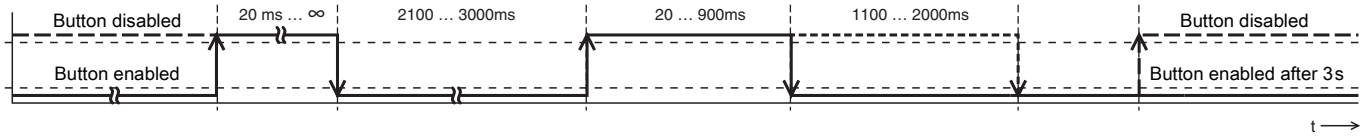

	Pulse only necessary if a low-level was applied previously	Activation of the teach switching output: Action starts with the falling edge: t_{Teach} = 2100 … 3000ms	Switching output switches in the label gap (20 … 900ms) Switching output switches on the label (1100 … 2000ms)	The teach event is concluded with the falling edge. 50ms after the falling edge, the sensor returns to normal operation. The teach button is enabled again after max. 3 s

Storing teach values in the sensor

It is possible to store or retrieve up to 30 different teach values. In this way, various label materials can be processed without the operator needing to perform a teach event. If this function is desired, static interlocking of the teach button is recommended so that no operation of the device can occur.

The event starts with the execution of the line teach (see description on page 6). The teach value ascertained in this way remains in sensor memory and is then stored in one of 30 possible storage places using the process described in the following.

Flow chart: First perform line teach, then store teach value.

Storing teach values

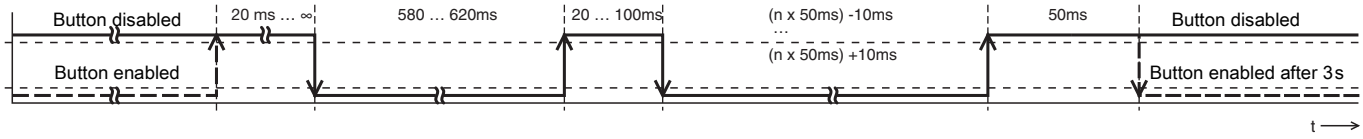

	Pulse only necessary if a low-level was applied previously	Activation - store current teach value: Action starts with the falling edge: t_{Teach} = 580 … 620ms		Select storage place: The pulse length determines the storage place for the current teach value: n=1,2,3 … 30 Example: t for storage place 3: 140ms … 160ms	The selection of the storage place is concluded with the rising edge. 50ms after the rising edge, the sensor returns to normal operation.	

Reading out teach values

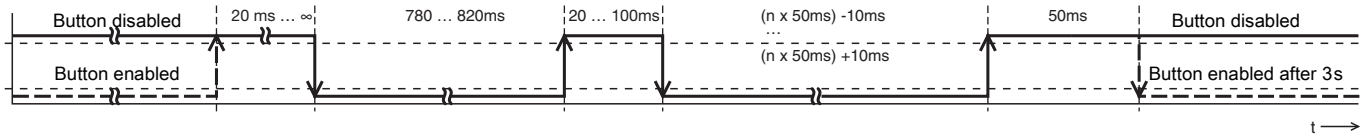

	Pulse only necessary if a low-level was applied previously	Action - read out teach value: Action starts with the falling edge: t_{Teach} = 780 … 820ms	Load teach value	Select storage place: The pulse length determines the storage place from which the teach value is loaded: n=1,2,3 … 30 Example: t for storage place 7: 340ms … 360ms	The selection of the storage place is concluded with the rising edge. 50ms after the rising edge, the sensor returns to normal operation.	

Locking the teach button via the teach input

(I)GS 63B

A **static high signal** on the teach input locks the teach button on the device so that no manual operation is possible (e.g. protection against erroneous operation or manipulation).

If the teach input is not connected or if there is a static low signal, the button is unlocked and can be operated freely.

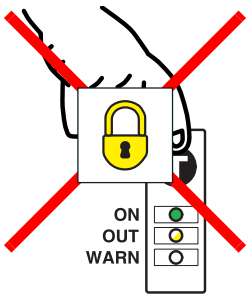

Notices for integrating the sensor in a control concept

If the sensor is taught externally via a control, it may be necessary to receive acknowledgment from the sensor with respect to its current teach state. Use the following chart for this purpose:

Operating mode	Reaction from sensor
Dispensing mode	Dynamic output signal: alternates between gap and label
Teach	Static output signal: the state prior to teaching is frozen
Teach OK	Output signal is dynamic again—warning output not active
Teach faulty	Output signal is dynamic again—warning output active; repeat teach event if necessary

Mechanical accessories

Flat mounting device – for mounting compatibility with GS 06 fork photoelectric sensors

Mounting device **BT-GS6X.L** (part no. **50114381**), flat design, especially for mounting compatibility with our GS 06 fork photoelectric sensors.



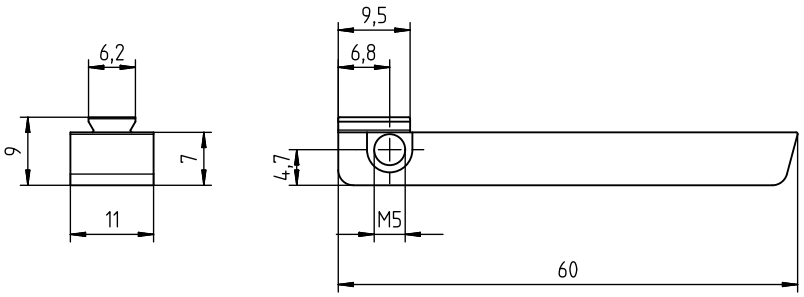

High mounting device – for uniform tape height with (I)GSU 14 ultrasonic fork sensors

Mounting device **BT-GS6X.H** (part no. **50123869**), high design, especially if it is desired that the tape pass through at a uniform height between our (I)GSU 14 and the GS 63B.



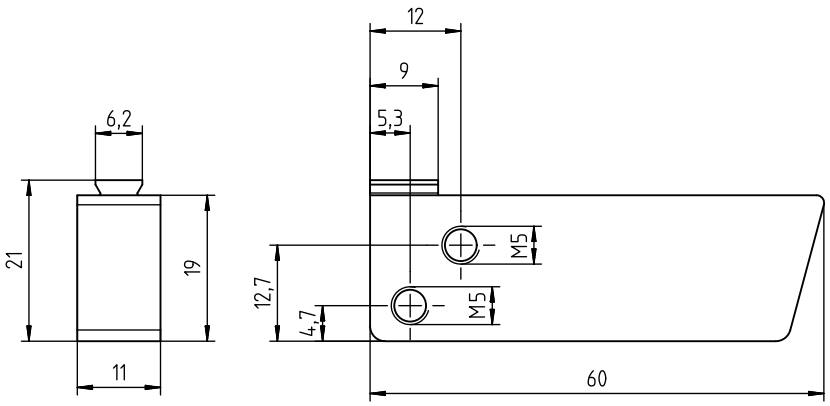

Clamp – for installation in a groove directly at the dispensing edge

The **BT-GS6X.DT** clamp (part no. **50128583**) is required for fastening the sensor at an arbitrary position in a groove. Connect clamp to sensor as shown and secure at the desired position by uniformly screwing in the stud screws.

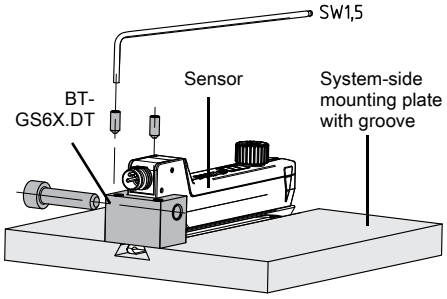

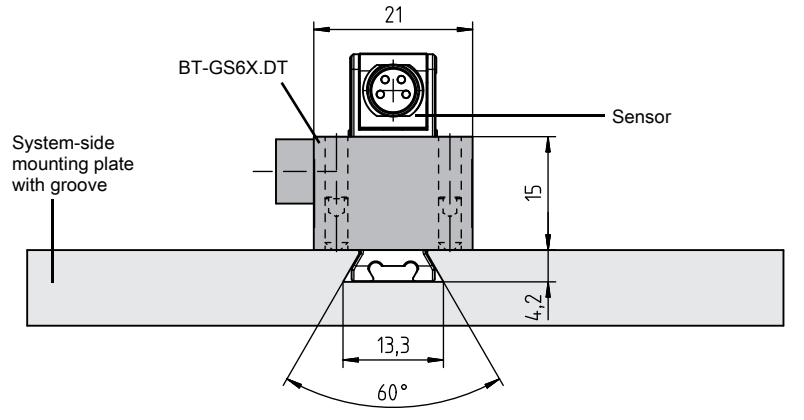

Maintenance information

The (I)GS 63B fork photoelectric sensor is largely maintenance free. Depending on the environmental conditions and the used materials, it may be necessary from time to time to clean the transparent parts in the lower and upper fork of the fork photoelectric sensor. We recommend using a soft, moist cloth for this purpose. To protect the surface, cleaning agents containing solvents should not be used for transparent parts.

Environmental durability

The used materials feature very good resistance to weak acids and bases as well as to UV exposure. Contact with organic solvents is possible only to a limited extent and only for short times. Resistance to chemicals should be examined on a case by case basis.