BOARD LAYOUT

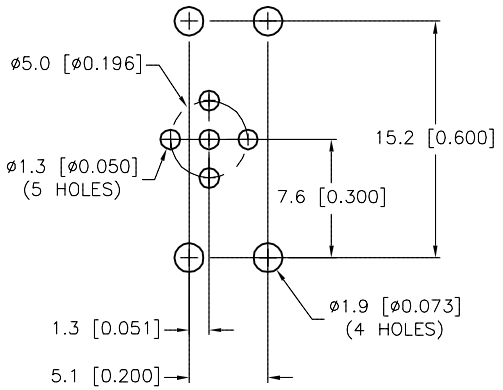

MALE END VIEW

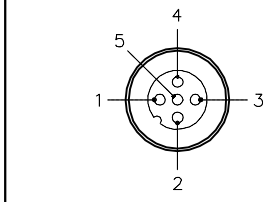

euro fast.

SPECIFICATIONS

CONTACT CARRIER MATERIAL/COLOR	NYLON OR TPU/YELLOW
CONTACT MATERIAL/PLATING	BRASS/GOLD
HOUSING, LOCKNUT MATERIAL/PLATING	BRASS/NICKEL
RATED CURRENT [A]	4.0 A
RATED VOLTAGE [V]	250 V
NUMBER OF CONDUCTORS [AWG]	PRINTED CIRCUIT PINS
TEMPERATURE RATING	−40°C to +80°C (−40°F to +176°F)
PROTECTION CLASS	MEETS NEMA 1,3,4,6P AND IEC IP68

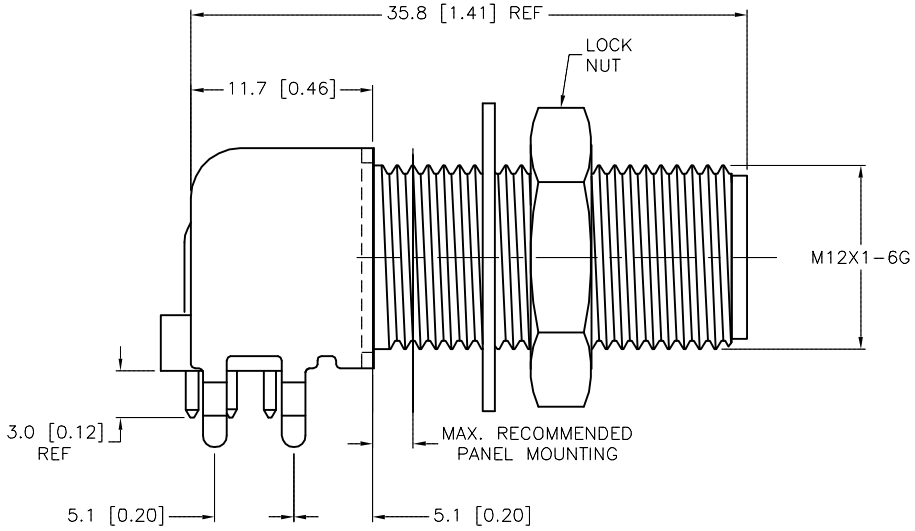

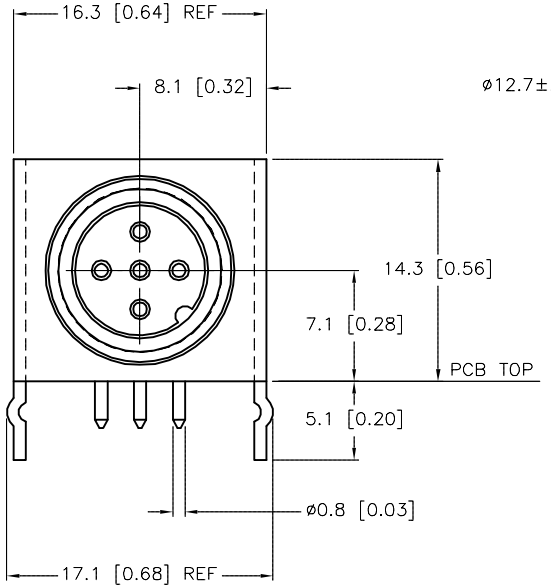

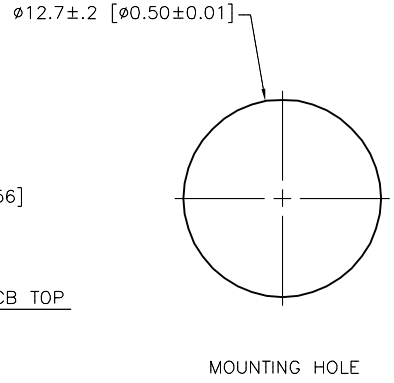

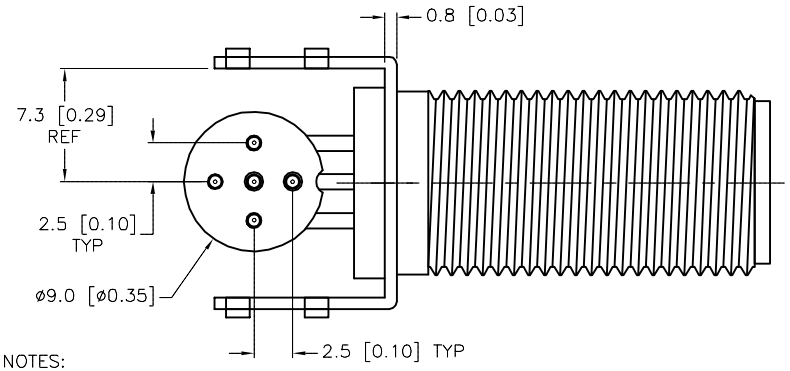

NOTES:

1. DO NOT REMOVE PIN SPACER.
2. UNIT SNAP−FITS INTO 0.062 TO 0.125 THICK PC BOARDS.

SOURCE DRAWING - FOR REFERENCE ONLY

REV	DESCRIPTION	BY	DATE	ECO NO.
H	ADD WASHER PER ECO	KMY	04/23/14	45597

RELATED DOCUMENTS
1. INSERT SHEET 10240204
2.
3.
4.

3RD ANGLE PROJECTION

THIS DRAWING IS CONFIDENTIAL AND THE PROPERTY OF TURCK INC. USE OF THIS DOCUMENT WITHOUT WRITTEN PERMISSION IS PROHIBITED.

TURCK INC
High Technology Sensors and Automation Controls
3000 CAMPUS DRIVE
MINNEAPOLIS, MN 55441
1−800−544−7769
(763) 553−7300
(763) 553−0708 fax
turck.com

MATERIAL

FINISH

ALL DIMENSIONS DISPLAYED ON THIS DRAWING ARE FOR REFERENCE ONLY

CONTACT TURCK FOR MORE INFORMATION

DRFT GC | DATE 03/08/99
APVD | SCALE 2=1.0

UNIT OF MEASUREMENT
MILLIMETER [INCH]
DO NOT SCALE THIS DRAWING

DESCRIPTION: WFS 4.5−PCB
IDENTIFICATION NO.: U2369−1
REV: H
FILE: U2369−1
SHEET 1 OF 1

Approved 04/23/2014, work order #55826 by J.S.