# PU500E

## Pressure transmitter

PU-400-SEG14-C-DVG/US

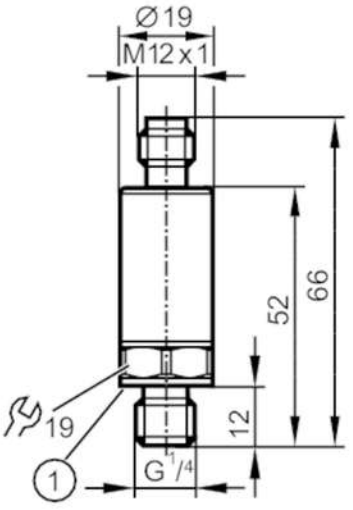


1 Sealing

| | | | | |
|---|---|---|---|---|
| **Product characteristics** | | | | |
| Number of inputs and outputs | | Number of analogue outputs: 1 | | |
| Measuring range | | 0...400 bar | 0...5800 psi | 0...40 MPa |
| Process connection | | threaded connection G 1/4 external thread (DIN EN ISO 1179-2) | | |
| **Application** | | | | |
| Application | | for mobile applications | | |
| Media | | liquids and gases | | |
| Medium temperature | [°C] | -40...125 | | |
| Min. bursting pressure | | 1700 bar | 24655 psi | 170 MPa |
| Pressure rating | | 1000 bar | 14500 psi | 100 MPa |
| Note on pressure rating | | static | | |
| Vacuum resistance | [mbar] | -1000 | | |
| Vacuum resistance | [MPa] | -0.1 | | |
| Type of pressure | | relative pressure | | |
| **Electrical data** | | | | |
| Operating voltage | [V] | 8...32 DC | | |
| Current consumption | [mA] | < 12 | | |
| Min. insulation resistance | [MΩ] | 100; (500 V DC) | | |
| Protection class | | III | | |
| Reverse polarity protection | | yes | | |
| Power-on delay time | [s] | < 0.1 | | |
| **Inputs / outputs** | | | | |
| Number of inputs and outputs | | Number of analogue outputs: 1 | | |
| **Outputs** | | | | |
| Total number of outputs | | 1 | | |
| Output signal | | analogue signal | | |
| Number of analogue outputs | | 1 | | |

# PU500E

## Pressure transmitter

PU-400-SEG14-C-DVG/US

| | | | | |
|---|---|---|---|---|
| Analogue voltage output | [V] | 0.5...4.5 | | |
| Min. load resistance | [Ω] | 2000 | | |
| Short-circuit proof | | yes | | |
| Overload protection | | yes | | |
| **Measuring/setting range** | | | | |
| Measuring range | | 0...400 bar | 0...5800 psi | 0...40 MPa |
| **Accuracy / deviations** | | | | |
| Repeatability | [% of the span] | < ± 0,05; (with temperature fluctuations < 10 K) | | |
| Characteristics deviation | [% of the span] | < ± 0,8; (incl. drift when overtightened, zero point and span error, non-linearity, hysteresis) | | |
| Linearity deviation | [% of the span] | < ± 0,25 (BFSL) / < ± 0,5 (LS) | | |
| Hysteresis deviation | [% of the span] | < ± 0,2 | | |
| Long-term stability | [% of the span] | < ± 0,1; (per 6 months) | | |
| Temperature coefficient zero point | [% of the span / 10 K] | < ± 0,1 (0...80 °C); < ± 0,2 (-40...0 °C / 80...125 °C) | | |
| Temperature coefficient span | [% of the span / 10 K] | < ± 0,1 (0...80 °C); < ± 0,2 (-40...0 °C / 80...125 °C) | | |
| **Response times** | | | | |
| Step response time analogue output | [ms] | 2 | | |
| **Operating conditions** | | | | |
| Ambient temperature | [°C] | -40...100 | | |
| Storage temperature | [°C] | -40...100 | | |
| Protection | | IP 67; IP 69K | | |
| **Tests / approvals** | | | | |
| EMC | | noise immunity according to UN ECE R10, rev. 6 | | |
| | | ISO 11452-2 | 100 V/m | |
| | | DIN EN 61326-1 | | |
| Shock resistance | | DIN EN 60068-2-27 | 500 g (1 ms) | |
| Vibration resistance | | DIN EN 60068-2-6 | 20 g (10...2000 Hz) | |
| MTTF | [years] | 658 | | |
| Pressure Equipment Directive | | Sound engineering practice; can be used for group 2 fluids; group 1 fluids on request | | |
| **Mechanical data** | | | | |
| Weight | [g] | 58.9 | | |
| Housing | | cylindrical | | |
| Dimensions | [mm] | Ø 19 / L = 66 | | |
| Materials | | stainless steel (630/1.4542/17-4 PH); stainless steel (316L/1.4404); PEI | | |
| Materials (wetted parts) | | stainless steel (630/1.4542/17-4 PH) | | |
| Min. pressure cycles | | 60 million; (at 1.2 times nominal pressure) | | |
| Tightening torque | [Nm] | 25...35; (recommended tightening torque; depends on lubrication, seal and pressure rating) | | |
| Process connection | | threaded connection G 1/4 external thread (DIN EN ISO 1179-2) | | |

# PU500E

## Pressure transmitter

PU-400-SEG14-C-DVG/US

| | |
|---|---|
| Process connection sealing | HNBR (DIN EN ISO 1179-2) |
| Restrictor element integrated | yes |

### Remarks

| | |
|---|---|
| Remarks | BFSL = Best Fit Straight Line |
| | LS = limit value setting |
| Pack quantity | 1 pcs. |

### Electrical connection

Connector: 1 x M12; coding: A; Maximum cable length: 30 m

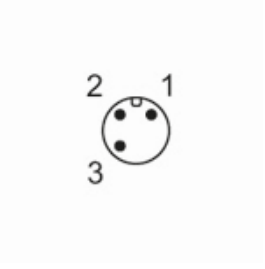


Connection

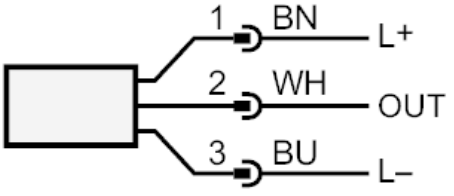


| | |
|---|---|
| OUT | analogue output |
| | colours to DIN EN 60947-5-2 |
| | Core colours : |
| BN = | brown |
| BU = | blue |
| WH = | white |