OPERATORS

for potentially explosive atmospheres
flameproof enclosure
II 2G/D Ex **d** IIC T6..T4 Gb / Ex **tb** IIIC Db IP66/IP67
aluminium or stainless steel enclosure

Series
NF
WSNF

FEATURES

- *Explosionproof operator for use in potentially explosive atmospheres according to ATEX-Directive 2014/34/EU*
  EC type examination certificate no.: ***LCIE 00 ATEX 6008 X***
  IECEx Certificate of Conformity no.: ***IECEx LCI 07.0015X***
- *Compliance with the Essential Health and Safety Requirements has been assured by compliance with the International and European Standards EN-IEC 60079-0, EN-IEC 60079-1 and EN-IEC 60079-31*
- *Easy electrical installation by means of a screw terminal coil*
- *Enclosure provided with a 1/2 NPT threaded entry hole (M20 x 1,5 in option) for a broad range of cable entries*
- *Ingress protection degree IP66/67*
- *A wide range of valves can be supplied with the operator*



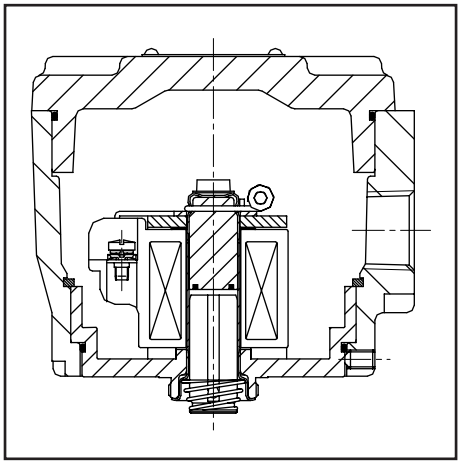

CONSTRUCTION

Solenoid enclosure	NF	Chromated aluminium, epoxy coated
	WSNF	Stainless steel (AISI 316L)
Bonnet	NF	Steel (zinc plated)
	WSNF	Stainless steel (nickel plated)
Core, core tube and plugnut	all	Stainless steel
Shading coil	all	Copper or silver
Nameplate	NF	Stainless steel
	WSNF	Stainless steel
Coil connection	all	Embedded screw terminals
Fasteners & screws	all	Stainless steel
Safety code		IECEx / Ex II 2G Ex d IIC T6..T4 Gb
		IECEx / Ex II 2D Ex tb IIIC 85°C..135°C Db IP66/67

ELECTRICAL CHARACTERISTICS

Standard voltages	DC (=) : 24V - 48V
(Other voltages and 60 Hz on request)	AC (~) : 24V - 48V - 115V - 230V[3] / 50 Hz

TEMPERATURE CLASSIFICATION TABLES

AC (~) solenoids

Pn (watt)	solenoid size MXX	solenoid size M12			maximum ambient °C [1] surface temperature T6 85°C	T5 100°C	T4 135°C	T3 200°C
insulation class F/H (155°C/180°C) 100% E.D.								
1,85[2][3]		●			75	80		
3,7 [2]		●			60	75	100	
5,8 [2]		●			60	75	100	
10,0 [2]	●				40	60	75	
10,0 [2]		●			40	60	100	
10,5	●				25	40	60	
13,4 [2]	●				40	60	75	
14,1 [2]		●			40	60	90	
15,4		●			25	40	60	
16,5		●			40	60	75	
16,7	●					25	40	
20,0		●				25	40	
20,5	●						25	
28,0		●					25	

DC (=) solenoids

Pn (watt)	solenoid size MXX	solenoid size M12			maximum ambient °C [1] surface temperature T6 85°C	T5 100°C	T4 135°C	T3 200°C
insulation class F/H (155°C/180°C) 100% E.D.								
1,8		●			75	80		
3,6		●			60	75	100	
5,7		●			60	75	100	
10,0		●			40	60	100	
11,2	●				40	60	75	
14,0		●			40	60	90	
16,8		●			40	60	75	
19,7	●				25	40	60	
23,0		●			25	40	60	
26,6		●			25	40	60	
29,5		●				25	40	
36,2		●				25	40	

Check the wattage compatibility with the product selected.

[1] **The minimum allowable ambient temperature is -60°C for the operator.** Actual temperature range can be limited depending on valve operation limits.

[2] AC (~): rectified coil construction.

[3] 230 V AC does not exist (Pn 1,85 W).

ORDERING INFORMATION

A valve supplied with the explosionproof operator will be identified with prefix NF or WSNF before the catalogue number.

Example: **NF** E 210D095 230V/50 Hz

- **NF** — operator
- E — pipe thread ISO 7/1
- 210D095 — basic number
- 230V/50 Hz — voltage

A valve supplied with the explosionproof operator will be identified with electrical interface FN, FS, FT or FU in the 15-digit product code.

15-DIGIT PRODUCT CODE

E 262 K 232 **FN** V00 H1

- E — Thread connection
- 262 — Product series
- K — Revision letter
- 232 — Valves version
- **FN** — **Electrical interface**
  - **FN** = NF
  - **FS** = WSNF
  - **FT** = NFET
  - **FU** = WSNFET
- V00 — Options
- H1 — Voltage - class

00130GB-2017/R01
Availability, design and specifications are subject to change without notice. All rights reserved.

OPTIONS

- Operators for mining, I M2 Ex d I, contact us

ORDERING EXAMPLES:

NF	B	327 B 001		230V / 50 Hz
NF	G	551 B 405		230V / 50 Hz
NFET	G	327 B 001	V	230V / 50 Hz
WSNF	E	272 A 047	MS	24V / DC
WSNF	B	320 A 184	E	24V / DC

prefix
pipe thread
basic number
suffix
voltage

MOUNTING BRACKET

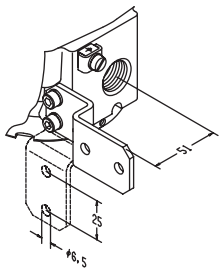

Bracket kit no. **C139824**
contains: Stainless steel 304 SS screws and bracket

15-DIGIT PRODUCT CODE

E	262	K	232	**FN**	V00	H1
E	262	K	232	**FS**	V00	F8
E	262	K	232	**FT**	V00	FT
E	262	K	232	**FU**	V00	H9

Thread connection
Product series
Revision letter
Valves version
Electrical interface
Options
Voltage - class

CONNECTIONS

- Any ATEX approved cable entry device can be fitted in the 1/2 NPT threaded entry hole (M20 x 1.5 in option). Refer to the nameplate for identification of the maximum cable temperature
- Internal and external earthing connection
- The operator can be rotated through 360° to select the most favourable position for cable entry

DIMENSIONS (mm), WEIGHT (kg)



TYPE NF-WSNF

Prefix "NF" , "WSNF" Solenoid / Electrical interface FN/FS/FT/FU
Aluminium, stainless steel
(NF, epoxy coated)
EN-IEC 60079-1 and EN-IEC 60079-31
II 2G Ex d IIC Gb, II 2D Ex tb IIIC Db IP66/67

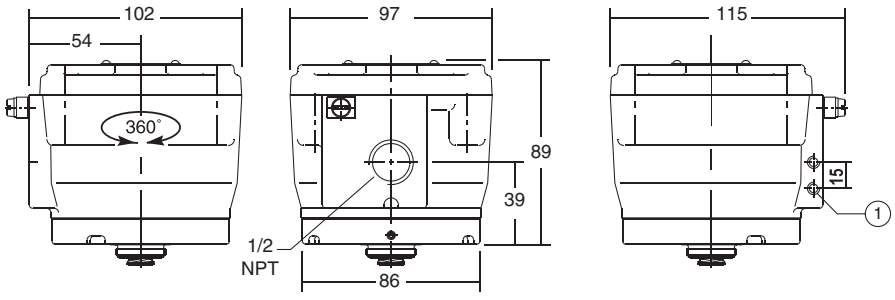

series	weight
NF	1,4
WSNF	2,7

(1) 2 mounting holes M5, depth 9 mm

00130GB-2017/R01
Availability, design and specifications are subject to change without notice. All rights reserved.