DC voltage monitoring in 1-phase mains

G4UF500V03

part no.: 2394504

Monitoring relays - GAMMA series

Over- and undervoltage monitoring

Zoom voltage 24V to 240V AC/DC

3 change over contacts

Width 45mm

Industrial design



Technical data

1. Functions
DC over- and undervoltage monitoring in 1-phase mains with fixed adjustable thresholds and fixed adjustable hysteresis.

2. Time ranges

	Adjustment range
Start-up suppression time:	-
Tripping delay:	-

3. Indicators

Green LED U ON:	indication of supply voltage
Red LED max / min ON/OFF:	indication of failure of the corresponding threshold max or min
Yellow LED Rel Max ON/OFF:	indication of relay output Rel Max
Yellow LED Rel Min ON/OFF:	indication of relay output Rel Min

4. Mechanical design
Self-extinguishing plastic housing, IP rating IP40
Mounted on DIN-rail TS 35 according to EN 60715
Mounting position: any
Shockproof terminal connection according to VBG 4 (PZ1 required), IP rating IP20
Tightening torque: max. 1Nm
Terminal capacity:
- 1 x 0.5 to 2.5mm² with/without multicore cable end
- 1 x 4mm² without multicore cable end
- 2 x 0.5 to 1.5mm² with/without multicore cable end
- 2 x 2.5mm² flexible without multicore cable end

5. Input circuit

Supply voltage:	
24V to 240V AC/DC	terminals A1-A2 (galvanically separated)
Tolerance:	
24V to 240V DC	-20% to +25%
24V to 240V AC	-15% to +10%
Rated frequency:	
48Hz to 400Hz	24V to 240V AC
16Hz to 48Hz	48V to 240V AC
Rated consumption:	1.5VA (1.1W)
Duration of operation:	100%
Reset time:	500ms
Residual ripple of DC:	-
Drop-out voltage:	>30% of the supply voltage
Overvoltage category:	II (in accordance with IEC 60664-1)
Rated surge voltage:	4kV

6. Output circuit
3 potential free change over contacts

1 change over contact	indication of overvoltage terminals 15-16-18
2 change over contacts	indication of undervoltage terminals 25-26-28 / 35-36-38
Rated voltage:	250V AC
Switching capacity:	750VA (3A / 250V AC)

If the distance between the devices is less than 5mm!

Switching capacity:	1250VA (5A / 250V AC)

If the distance between the devices is greater than 5mm!

Fusing:	5A fast acting
Mechanical life:	20 x 10^6 operations
Electrical life:	2 x 10^5 operations at 1000VA resistive load
Switching frequency:	max. 60/min at 100VA resistive load max. 6/min at 1000VA resistive load (in accordance with IEC 60947-5-1)
Overvoltage category:	III (in accordance with IEC 60664-1)
Rated surge voltage:	4kV

7. Measuring circuit

Fusing:	max. 20A (in accordance with UL 508)
Measured variable:	DC Sinus (48 to 63Hz)
Measurement input:	
216V DC	terminals L1-E
288V DC	terminals L2-E
360V DC	terminals L3-E
Overload capacity:	
216V DC	500V DC
288V DC	500V DC
360V DC	500V DC
Input resistance:	
216V DC	1MW
288V DC	1MW
360V DC	1MW
Switching threshold	
max:	fixed, 260V DC / 346V DC / 432V DC
min:	fixed, 216V DC / 288V DC / 360V DC
Overvoltage category:	III (in accordance with IEC 60664-1)
Rated surge voltage:	4kV

8. Accuracy

Base accuracy:	±1.5%
Frequency response:	-
Adjustment accuracy:	-
Repetition accuracy:	≤1%
Voltage influence:	≤0.5%
Temperature influence:	≤0.1% / °C

9. Ambient conditions

Ambient temperature:	-25 to +55°C (in accordance with IEC 60068-1) -25 to +40°C (in accordance with UL 508)
Storage temperature:	-25 to +70°C
Transport temperature:	-25 to +70°C
Relative humidity:	15% to 85% (in accordance with IEC 60721-3-3 class 3K3)
Pollution degree:	3 (in accordance with IEC 60664-1)
Vibration resistance:	10 to 55Hz 0.35mm (in accordance with IEC 60068-2-6)
Shock resistance:	15g 11ms (in accordance with IEC 60068-2-27)

Functions

If a failure already exists when the device is activated, the output relays Rel Min and Rel Max remains in off-position and the red LED of the corresponding threshold (min or max) illuminate.

Over- and undervoltage monitoring
When the measured voltage exceeds the Max-value, the output relay Rel Max switches into off-postion immediately (yellow LED Rel Max not illuminated / red LED max illuminated). As soon as the measured voltage falls below the Max-value, the output relay Rel Max switches into on-position again (yellow LED Rel Max illuminated / red LED max not illuminated). When the measured voltage falls below the Min-value, the output relay Rel Min switches into off-postion immediately (yellow LED Rel Min not illuminated / red LED min illuminated). As soon as the measured voltage exceeds the Min-value, the output relay Rel Min switches into on-position again (yellow LED Rel Min illuminated / red LED min not illuminated).

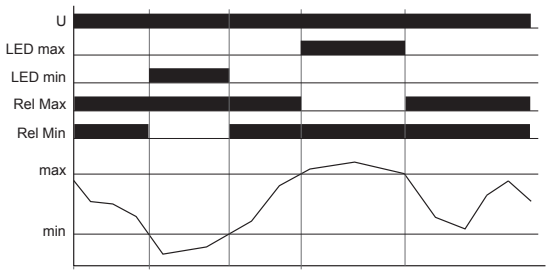

Connections

Measuring range 216V DC, supply voltage 24V AC/DC

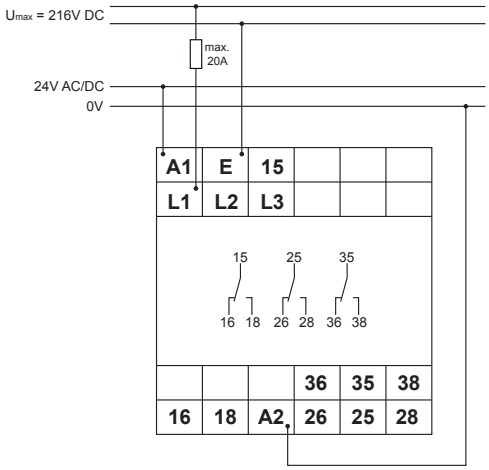

Measuring range 288V DC, supply voltage 230V AC

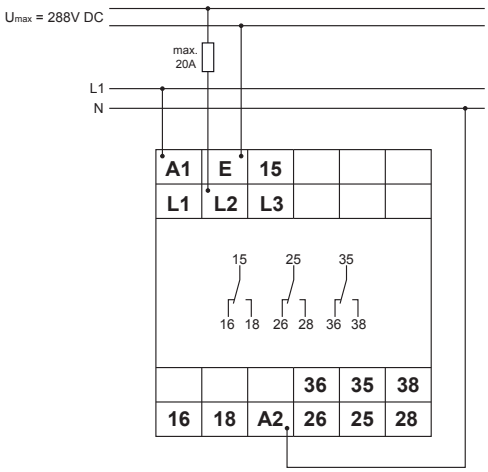

Measuring range 360V DC, supply voltage 24V AC/DC

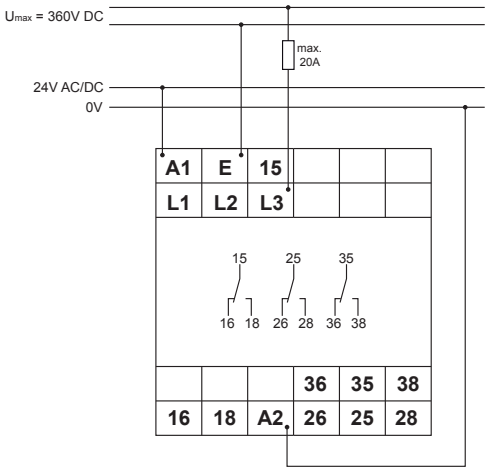

Dimensions

