efector200

ifm electronic

Photoelectric sensors

O5S200

O5S-OOKG/US
Through-beam sensor
Rectangular plastic
Plug and socket
Transmitter

Sensing range 20m

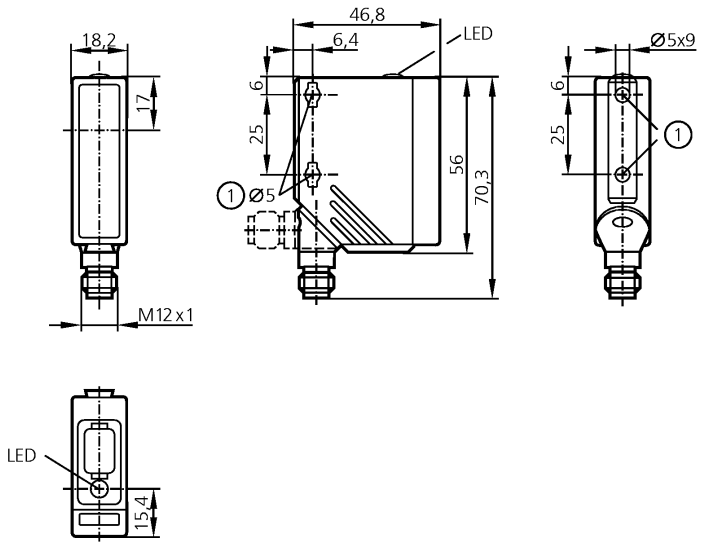

1: When a M5 mounting screw is used, the max. tightening torque is 2 Nm.

Electrical design		DC
Light spot diameter	[mm]	500 (at maximum range)
Operating voltage	[V]	10...36 DC
Reverse polarity protection		yes
Current consumption	[mA]	20
Type of light		Red light 624 nm
Operating temperature	[°C]	-25...60
Protection		IP 67, II
EMC		EN 60947-5-2
Housing material		housing: PA; bezel: high-grade stainless steel; operator interface: TPE
Material lens		PMMA
Function display		
Operation	LED	green
Connection		M12 connector
Remarks		cULus - Class 2 source required

Wiring



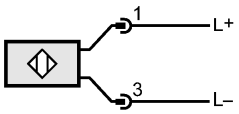

O5S200

excess gain graphs

