SOLENOID VALVES

pilot operated
built-in pilot, floating diaphragm
3/8 to 2

NC 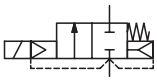

NO 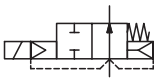

2/2
Series
238

FEATURES

- *Minimum operating pressure differential ΔP 0,3/0,5 bar*
- *Two way valves for automatic control of water, air and inert gas and other gases/liquids compatible with the sealing materials used*
- *Interchangeability of magnetic heads, AC and DC*
- *The solenoid valves satisfy all relevant EU Directives*



GENERAL

Differential pressure	See «SPECIFICATIONS» [1 bar =100 kPa]						
Ambient temperature range	-10°C to +60°C						
Maximum viscosity	40 cSt (mm²/s)						
Response time	3/8	1/2	3/4	1	1 1/4	1 1/2	2
opening time (ms)	25	30	55	70	300	300	1500
closing time (ms)	40	90	110	200	1000	1000	2000

fluids (∗)	temperature range (TS)	seal materials (∗)
DN ≤ 25: air, inert gas and water DN > 25: air and water	0°C to +85°C	NBR (nitrile) FPM (fluoroelastomer)

MATERIALS IN CONTACT WITH FLUID

(∗) Ensure that the compatibility of the fluids in contact with the materials is verified

Body	Brass
Internal parts	Stainless steel and brass
Springs	Stainless steel
Diaphragm & valve disc	NBR
Seals and pilot disc	FPM
Shading coil	Copper

ELECTRICAL CHARACTERISTICS

Coil insulation class	F
Connector	Spade plug (cable Ø 6-8 mm or Ø 6-10 mm)
Connector specification	
for power coil: 4 W/6,9 W	DIN 43650, 11 mm, industry standard B
for power coil: 5/6,9W-8/9W-12,5/9W	ISO 4400 / EN 175301-803, form A
Electrical safety	IEC 335
Electrical enclosure protection	Moulded IP65 (EN 60529)
Standard voltages	DC (=) : 24V - 48V
(Other voltages and 60 Hz on request)	AC (~) : 24V - 48V - 115V - 230V / 50 Hz

prefix option	power ratings inrush ~ (VA)	holding ~ (VA)	holding ~ (W)	hot/cold = (W)	operator ambient temperature rangef (TS) (C°)	replacement coil ~ 230 V/50 Hz	replacement coil = 24 V DC	type (1)
SC	12	6	4	5/6,9	-10 to +60	400127-197	400127-142	01 (2)
	10,4	6	5	5/6,9	-10 to +60	400727-117	400727-185	02
	23	14	8	7,5/9	-10 to +50	511239-009	511239-002	03
	28	20	12,5	7,5/9	-10 to +50	511239-014	511239-002	03

(1) Refer to the dimensional drawings on the following page. (2) UL/CSA certified.

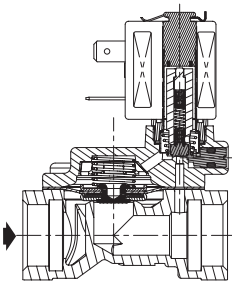

NC function

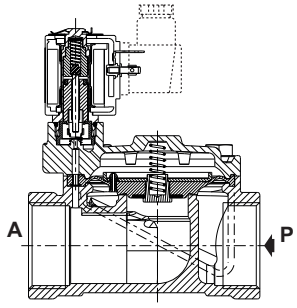

NO function

SPECIFICATIONS

pipe size	orifice size (mm)	flow coefficient Kv (m³/h)	flow coefficient Kv (l/min)	operating pressure differential (bar) min.	operating pressure differential (bar) max. (PS) air / water (∗) ~	operating pressure differential (bar) max. (PS) air / water (∗) =	power coil (W) ~	power coil (W) =	catalogue number ~/=	options maintained man. operator	options FPM	options EPDM
NC - Normally closed												
G* 3/8	12	2,4	40	0,3	10	10	4	6,9	**SCE238D001**	MO	V	E
					16	16	5	6,9	**SCE238D006**	MO	V	E
G* 1/2	12	2,4	40	0,3	10	10	4	6,9	**SCE238D002**	MO	V	E
					16	16	5	6,9	**SCE238D007**	MO	V	E
	15	4,2	70	0,3	10	10	4	6,9	**SCE238D003**	MO	V	E
					16	16	5	6,9	**SCE238D008**	MO	V	E
G* 3/4	20	6,6	110	0,3	10	10	4	6,9	**SCE238D004**	MO	V	E
					16	16	5	6,9	**SCE238D009**	MO	V	E
G* 1	25	9,9	165	0,3	10	10	4	6,9	**SCE238D005**	MO	V	E
					16	16	5	6,9	**SCE238D010**	MO	V	E
G 1 1/4	30	15	250	0,5	10	10	8	9	**SCG238E016**	MO	V	-
G 1 1/2	45	27	450	0,5	10	10	8	9	**SCG238E017**	MO	V	-
G 2	45	34	566	0,5	10	10	8	9	**SCG238E018**	MO	V	-
NO - Normally open												
G 1 1/4	30	15	250	0,5	10	10	12,5	9	**SCG238E019**	-	V	-
G 1 1/2	45	27	450	0,5	9	9	12,5	9	**SCG238E020**	-	V	-
G 2	45	34	566	0,5	9	9	12,5	9	**SCG238E021**	-	V	-

00041GB-2017/R01
Availability, design and specifications are subject to change without notice. All rights reserved.

All leaflets are available on: **www.asco.com**

OPTIONS

- Valves can also be supplied with FPM (fluorelastomer), EPDM (ethylene-propylene) seals, diaphragm and disc. Use the appropriate optional suffix letter for identification
- Explosionproof enclosures for use in zones 1/21-2/22, categories 2-3 to ATEX Directive 2014/34/EU (see "Explosionproof solenoids" section)
- Oxygen service, suffix NV, example: SCE238D002NVMO (Except pipe size G 1 1/4, G 1 1/2 and G 2)
- Plug with visual indication and peak voltage suppression or with cable length of 2 m (see Solenoids, Coils & Accessories section)

INSTALLATION

- The solenoid valves can be mounted in any position without affecting operation
- Pipe connections (G*) have standard combination thread according to ISO 228/1 and ISO 7/1. Pipe connections (G) have standard combination thread according to ISO 228/1
- Installation/maintenance instructions are included with each valve

SPARE PARTS KIT

catalogue number	spare parts kit no. (1)	
		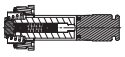
	~/=	~/=
SCE238D001/002/006/007	**C131600**	**C140262V**
SCE238D003/D008	**C131618**	**C140262V**
SCE238D004/D009	**C131606**	**C140262V**
SCE238D005/D010	**C131609**	**C140262V**

(1) Standard suffixes are also applicable to kits.

ORDERING EXAMPLES:

SC	E	238 **D** 001		230V / 50 Hz
SC	E	238 **D** 008	**V**	115V / 50 Hz
SC	E	238 **D** 004	**E**	24V / DC
SC	G	238 **E** 016		230V / 50 Hz

prefix — pipe thread — basic number — voltage — suffix

ORDERING EXAMPLES KITS:

C131600(1)	
C131618	**V**
C140262	**E**

basic number — suffix

DIMENSIONS (mm), WEIGHT (kg)



TYPE 01
Prefix "SC" Solenoid
Epoxy moulded
IEC 335 / DIN 43650
IP65
SCE238D001/002/004/005
SCE238D003



TYPE 02
Prefix "SC" Solenoid
Epoxy moulded
IEC 335 / ISO 4400
IP65
SCE238D006/007/009/010
SCE238D008



TYPE 03
Prefix "SC" Solenoid
Black PPS moulded
IEC 335 / ISO 4400
IP65
SCG238E016/017/018
SCG238E019/020/021

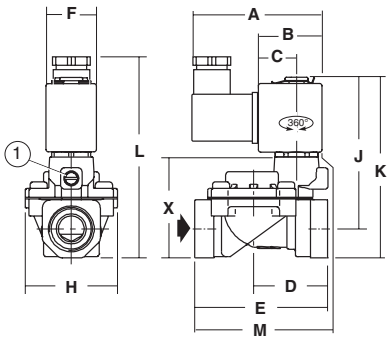

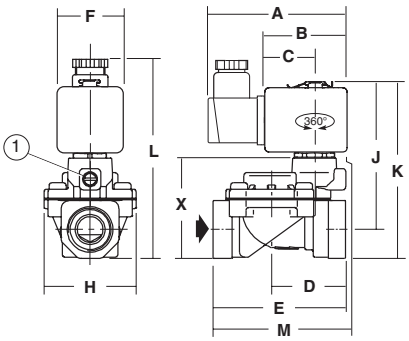

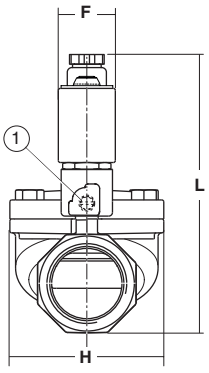

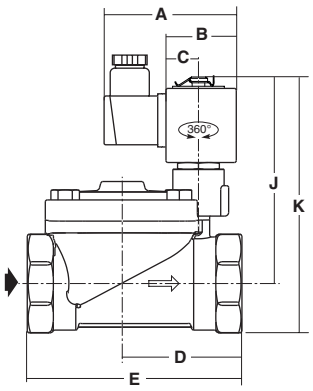

type	prefix option	catalogue number	A	B	C	D	E	F	H	J	K	L	M	X	weight (2)
01	SC	SCE238D001/002	60,5	27,5	17	34,5	62	22	43	68,5	81	98	57,5	47	0,4
		SCE238D003	60,5	27,5	17	45,5	81,5	22	57	71	83,5	100	73,5	49,5	0,5
		SCE238D004	60,5	27,5	17	53	95	22	68	79,5	94,5	111	85,5	60,5	0,8
		SCE238D005	60,5	27,5	17	58	105,5	22	87	84,5	104	121	93	70	1,0
02	SC	SCE238D006/007	76	38	23	34,5	62	30	43	69,5	83	100,5	61,5	47	0,5
		SCE238D008	76	38	23	45,5	81,5	30	57	72	85,5	103	77,5	49,5	0,6
		SCE238D009	76	38	23	53	95	30	68	80,5	96,5	114	89,5	60,5	0,9
		SCE238D010	76	38	23	58	105,5	30	87	85,5	106	123,5	97	70	1,1
03	SC	SCG238E016/019	76	36,6	21,6	63	113	30	81	108	134	150	-	-	1,7
		SCG238E017/020	76	36,6	21,6	76	140	30	110	112	142	157	-	-	2,6
		SCG238E018/021	76	36,6	21,6	85	157	30	110	116	152	168	-	-	2,9

(2) Incl. coil(s) and connector(s).

(1) Manual operator location

00041GB-2016/R01
Availability, design and specifications are subject to change without notice. All rights reserved.