BOS 18M-PI-PR30-S4
BOS01UE

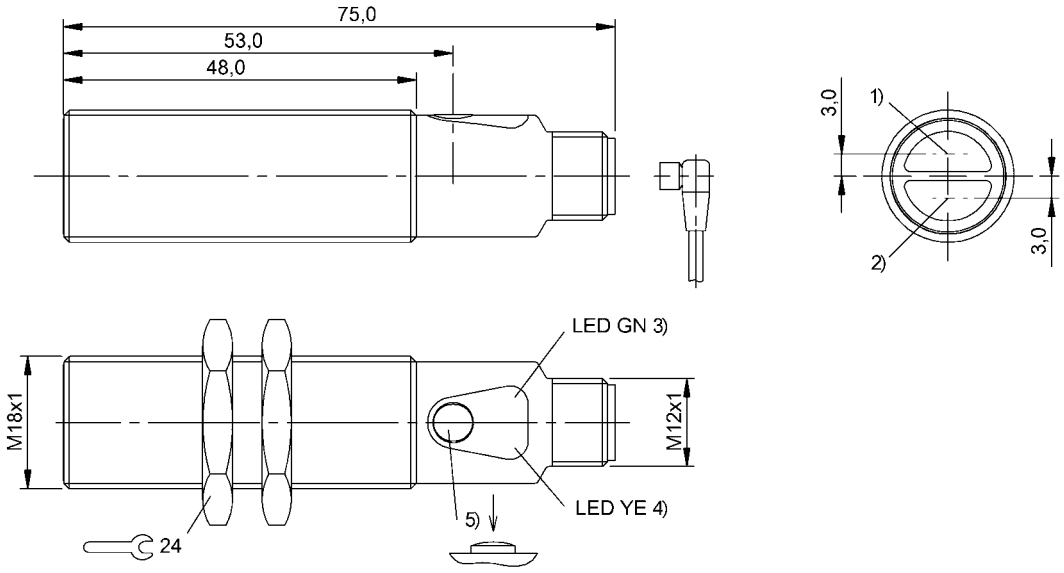

1) Optical axis receiver 2) Optical axis emitter 3) Power/short-circuit 4) Light reception/limit area 5) Sn

LISTED IND. CONT. EQ. 81U2 for use in the secondary of a class 2 source of supply

Display/Operation

Adjuster	Key (1x)
Setting	Light-on/dark-on Rated switching distance (Sn)

Electrical connection

Connection	M12x1-Connector, 4-pole, A-coded
Contact, surface protection	Gold plated
Polarity reversal protected	yes
Short-circuit protection	yes

Electrical data

Baud rate	38.4 kBaud
Load capacitance max. at Ue	0.3 µF
No-load current Io max. at Ue	40 mA
Operating voltage Ub	18…30 VDC
Pollution degree	3
Protected against miswiring	yes
Rated insulation voltage Ui	250 V AC
Rated operating current Ie DC	100 mA
Rated operating voltage Ue DC	24 V
Ready delay tv max.	100 ms
Residual current Ir max.	10 µA
Switching frequency	500 Hz
Turn-off delay toff max.	1 ms
Turn-on delay ton max.	1 ms
Utilization category	DC-13
Voltage drop Ud max. at Ie	1.5 V

Environmental conditions

Ambient temperature	-5…55 °C
Protection class	II
Protection type IEC 60529	IP67

Functional safety

Functional safety	no

General data

Approval/Conformity	CE cULus
Basic standard	IEC 60947-5-2
Function class, smart sensor	Binary data channel Teach channel Diagnostics Identification
Series	18M
Style	Cylinder Straight optics

Material

Housing material	Brass
Material sensing surface	Glass
Surface protection	nickel plates

Mechanical data

Dimension	Ø 18 x 75 mm
Fastening detail	Nut M18x1
Tightening torque max.	15 Nm 30 Nm

BOS 18M-PI-PR30-S4
BOS01UE

Optical data

Ambient light max.	10000 Lux
Beam characteristic	Divergent
LED group per IEC 62471	Exempt Group
Light type	LED Red light
Polarizing filter	yes
Principle of optical operation	Retroreflective sensor
Wave length	626 nm

Output/Interface

Interface	IO-Link 1.1
Interface setting option	Key disable on/off Sensor name in application Teach method 2-point/dyn. BDC mode 1-pt./2-pt./window Light-on/dark-on
Process data cycle min.	3 ms
Process data out	Teaching active/inactive Limit range yes/no Switching state active/inactive Error active/inactive
Switching output	PNP Normally open/Normally closed (NO/NC)

Range/Distance

Measuring range	0…5 m
Range	0…5 m
Rated operating distance Sn	5 m, Adjustable
Ripple max. (% of Ue)	15 %
Temperature drift max. (% of Sr)	10 %

Remarks

Order accessories separately.
For additional information, refer to user's guide.
The sensor is functional again after the overload has been eliminated.
Polarizing filters prevent spurious switching due to reflecting and shiny parts.

Connector view

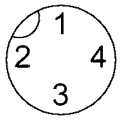

Wiring Diagram

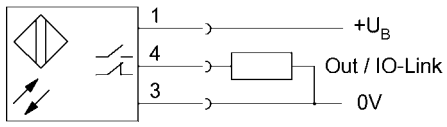

Symbols for Optoelectronic Sensors

