E70354

AS-Interface flat cable insulation displacement connector

FCE Splitter ye/bk ProcessL

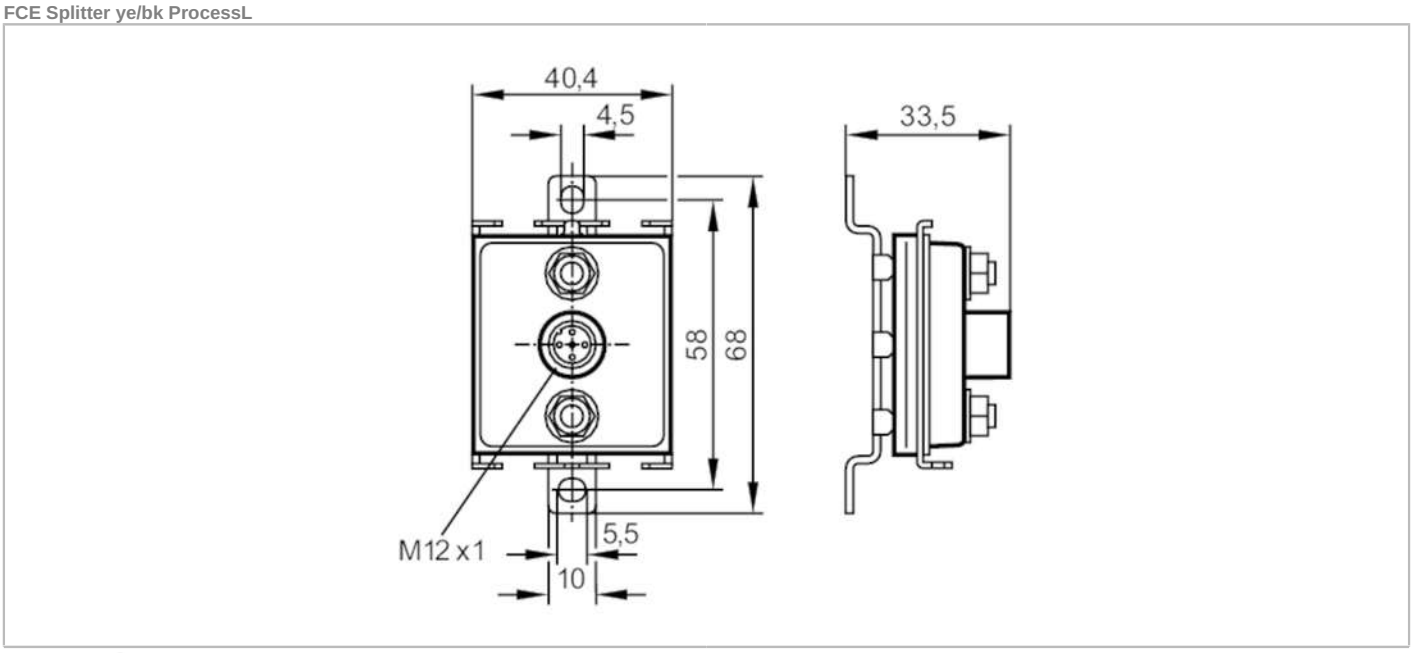

Application		
Design		AS-i / 24 V
Electrical data		
Protection class		III
Max. current load total	[A]	4; (AS-i: 2 A; AUX: 2 A)
Operating conditions		
Ambient temperature	[°C]	-30...80
Protection		IP 67; IP 68; IP 69K
Tests / approvals		
EMC		EN 61000-6-2
Mechanical data		
Weight	[g]	112.3
Materials		metal parts: stainless steel (1.4404 / 316L); rubber gasket for contact pins: FPM; O-ring: EPDM
Tightening torque	[Nm]	2.5; (lock nuts)
Accessories		
Accessories (optional)		Torque wrench:, E70390
Remarks		
Pack quantity		1 pcs.

Electrical connection - socket

Connector: 1 x M12; coding: A; Tightening torque: 1.2...1.4 Nm

E70354

AS-Interface flat cable insulation displacement connector

FCE Splitter ye/bk ProcessL

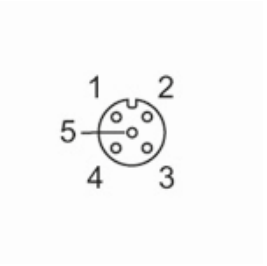

Connection

1	AS-i +
2	0 V
3	AS-i -
4	+ 24 V
5	n. c.