Brand of NTN corporation

Technical data

ESFTE207

Bearing units



Grey cast housing, radial insert ball bearing with eccentric locking collar, single lip seal

KIT CONTENT

ES207G2, FTE207

VISUAL (S)

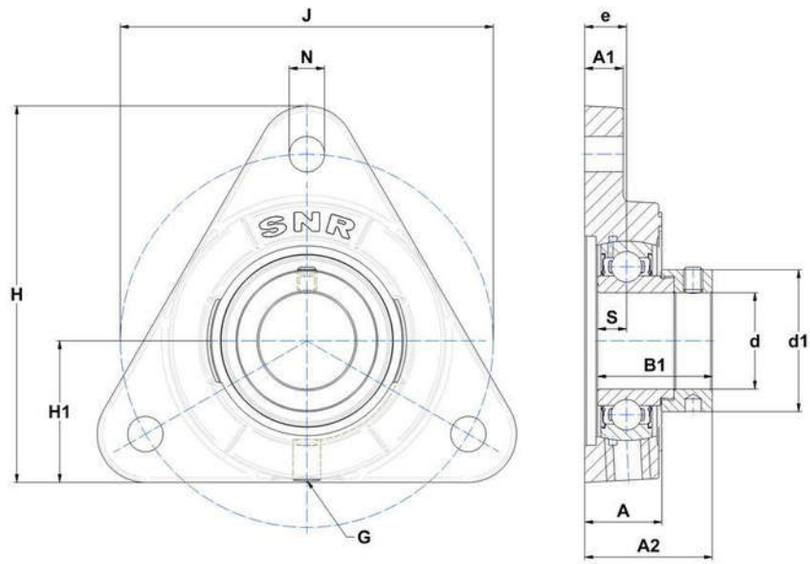

PRODUCT DEFINITION

Brand	SNR
A - Housing height	27 mm
A1 - Housing foot height / flange height	16 mm
A2 - Total height from mounting surface	45 mm
B - Width of Inner Ring	25,4 mm
B1 - Overall width Inner Ring	38,9 mm

NTN Europe
1 rue des Usines · BP 2017 · 74010 Annecy Cedex · France · Tel. +33 (0)4 50 65 30 00
S.A. au capital de 322 639 919 € · RCS ANNECY B 325 821 072 · Id. Fiscale : FR 48 325 821 072
SIRET 325 821 072 00015 · Code APE 2815 Z · Code NACE 28.15

PRODUCT DEFINITION	
d - Shaft diameter	35 mm
d1 - Outer dia of eccent. Lock. collar / nut of adapter sleeve	51,1 mm
e - Distance mounting surface to bearing center	15,6 mm
G - Grease fitting	R1/8"
H - Housing length, width or diameter	128 mm
H1 - Distance housing side to centre of bearing insert	48 mm
J - Mounting holes distance	129,7 mm
N - Mounting hole dimension	13,5 mm
S - Distance front side/bearing centre	9,5 mm

PRODUCT PERFORMANCE	
C - Dynamic load rating	25700000 mN
C0 - Static load rating	15200000 mN
Operating temperature min.	253,15 °K
Operating temperature max.	373,15 °K

OTHER FEATURES	
Mass	1,5 kg
Recommended tightening torque for set screw	11.5 N-m