97105 Inline & NAMUR , 3/2, 5/2 & 5/3 indirect solenoid actuated spool valves

- **1/4" & 1/2" (G or NPT) Inline & NAMUR**
- **Main application: Single and double acting actuators**
- **Approval according to DIN EN 161, DIN 3394 and IEC 61508, multichannel up to SIL 3**
- **Crossover-free switching**
- **Suited for outdoor use under critical environment conditions**
- **Variable valve solenoid combination**
- **Add-on manual override**



Technical features

Medium:
Neutral, gaseous fluids which do not damage the product or affect the function (e.g. compressed air, nitrogen). Based on ISO 8573-1-2010 classification 1-2-3.

Operation:
Indirect solenoid operated spool valve

Operating pressure:
2,5 ... 8 bar (36 ... 116 psi) with internal air supply
0 ... 8 bar (0 ... 116 psi) with external air supply

Orifice:
6 mm (1/4"); 8 mm (1/2")

Port size:
G1/4, G1/4 NAMUR,
1/4 NPT, 1/4 NPT NAMUR,
G1/2, G1/2 NAMUR,
1/2 NPT, 1/2 NPT NAMUR
NAMUR Interface with integrated recirculation from the exhaust air to the acutator spring chamber

Flow direction:
Fixed

Mounting position:
Optional, impulse valves preferably horizontally

Ambient/Media temperature:
NBR:
-40 ... +65°C (-40 ... +149°F)
HNBR:
-25 ... +80°C (-13 ... +176°F)
Depending on solenoid system. Air supply must be dry enough to avoid ice formation at temperatures below +2°C (35°F). For outdoor installations all connections must be protected against the penetration of moisture and a solenoid with IP66 protection must be used!

Material:
Body: Aluminium anodized (suitable for high humidity, sulphuric, sodium, chloride or ammonia enviroments, brass 2.0401, stainless steel 1.4404 (316 L)
Seals: NBR or HNBR

Further versions:
Manual reset on request

Flow conversion:
Cv US Gallon/min (water) = l/min (air) x 0,001
Kv m³/h (water) = l/min (air) x 0,000906

Our policy is one of continued research and development. We therefore reserve the right to amend, without notice, the specifications given in this document. (2004 - 5118i) © 2020 Norgren GmbH

Technical data Inline version

Seals NBR: -40 ... +65°C / IEC 61508: -40 ... +40°C
Seals HNBR: -25 ... +80°C / IEC 61508: -25 ... +65°C or 0 ... +80°C

Housing: Aluminium anodized

Symbol	Port size	Actuation/return	Flow (l/min)	Dimension No.	NBR IEC 61508	NBR Model *1)	HNBR IEC 61508	HNBR Model *1)
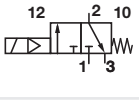	G1/4	Solenoid/spring	1300	1	x	9713535	x	9713235
	1/4 NPT	Solenoid/spring	1300	1	x	9713545	x	9713245
	G1/2	Solenoid/spring	2600	2	–	9713555	x	9713255
	1/2 NPT	Solenoid/spring	2600	2	–	9713565	x	9713265
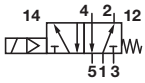	G1/4	Solenoid/spring	1300	3	x	9710535	x	9710235
	1/4 NPT	Solenoid/spring	1300	3	x	9710545	x	9710245
	G1/2	Solenoid/spring	2600	4	–	9710555	x	9710255
	1/2 NPT	Solenoid/spring	2600	4	–	9710565	x	9710265
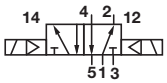	G1/4	Solenoid/solenoid	1300	5	–	9711535	–	9711235
	1/4 NPT	Solenoid/solenoid	1300	5	–	9711545	–	9711245
	G1/2	Solenoid/solenoid	2600	6	–	9711555	–	9711255
	1/2 NPT	Solenoid/solenoid	2600	6	–	9711565	–	9711265
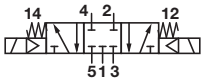	G1/4	Solenoid/solenoid	950	7	–	9712535	–	9712235
	1/4 NPT	Solenoid/solenoid	950	7	–	9712545	–	9712245

Housing: Stainless steel

Symbol	Port size	Actuation/return	Flow (l/min)	Dimension No.	NBR IEC 61508	NBR Model *1)	HNBR IEC 61508	HNBR Model *1)
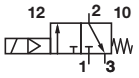	G1/4	Solenoid/spring	1300	1	x	9713735	x	9713435
	1/4 NPT	Solenoid/spring	1300	1	x	9713745	x	9713445
	G1/2	Solenoid/spring	2600	2	–	9713755	x	9713455
	1/2 NPT	Solenoid/spring	2600	2	–	9713765	x	9713465
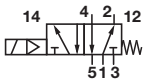	G1/4	Solenoid/spring	1300	3	x	9710735	x	9710435
	1/4 NPT	Solenoid/spring	1300	3	x	9710745	x	9710445
	G1/2	Solenoid/spring	2600	4	–	9710755	x	9710455
	1/2 NPT	Solenoid/spring	2600	4	–	9710765	x	9710465
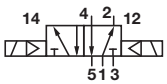	G1/4	Solenoid/solenoid	1300	5	–	9711735	–	9711435
	1/4 NPT	Solenoid/solenoid	1300	5	–	9711745	–	9711445

Housing: Brass

Symbol	Port size	Actuation/return	Flow (l/min)	Dimension No.	NBR IEC 61508	NBR Model *1)	HNBR IEC 61508	HNBR Model *1)
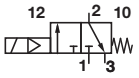	G1/4	Solenoid/spring	1300	1	x	9713635		
	1/4 NPT	Solenoid/spring	1300	1	x	9713645		
	G1/2	Solenoid/spring	2600	2	–	9713655		
	1/2 NPT	Solenoid/spring	2600	2	–	9713665	x	9713365
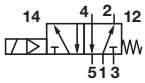	G1/4	Solenoid/spring	1300	3	x	9710635		
	1/4 NPT	Solenoid/spring	1300	3	x	9710645	x	9710345
	G1/2	Solenoid/spring	2600	4	–	9710655	x	9710355
	1/2 NPT	Solenoid/spring	2600	4	–	9710665		
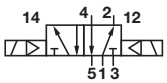	1/4 NPT	Solenoid/solenoid	1300	5	–	9711645		
	1/2 NPT	Solenoid/solenoid	2600	6	–	9711665		

*1) When ordering please indicate solenoid, voltage and current type (frequency)

Our policy is one of continued research and development. We therefore reserve the right to amend, without notice, the specifications given in this document. (2004 - 5118i) © 2020 Norgren GmbH

NORGREN

Technical data NAMUR version

Seals NBR: -40 ... +65°C / IEC 61508: -40 ... +40°C
Seals HNBR: -25 ... +80°C / IEC 61508: -25 ... +65°C or 0 ... +80°C

Housing: Aluminium anodized

Symbol	Port size	Actuation/return	Flow (l/min)	Dimension No.	NBR IEC 61508	NBR Model *1)	HNBR IEC 61508	HNBR Model *1)
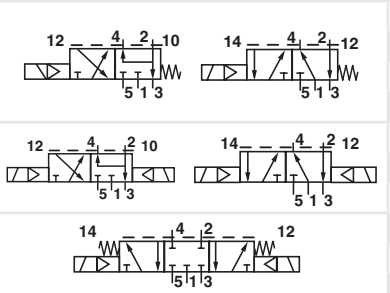	G1/4 NAMUR	Solenoid/spring	1300	8	x	9710505	x	9710205
	1/4 NPT NAMUR	Solenoid/spring	1300	8	x	9710515	x	9710215
	G 1/2 NAMUR	Solenoid/spring	2600	9	–	9710595	x	9710295
	1/2 NPT NAMUR	Solenoid/spring	2600	9	–	9710596	x	9710296
	G1/4 NAMUR	Solenoid/solenoid	1300	10	–	9711505	–	9711205
	1/4 NPT NAMUR	Solenoid/solenoid	1300	10	–	9711515	–	9711215
	G1/4 NAMUR	Solenoid/solenoid (APB)	950	11	–	9712505	–	9712205
	1/4 NPT NAMUR	Solenoid/solenoid (APB)	950	11	–	9712515	–	9712215

Housing: Aluminium anodized with inlet filter and exhaus guard

Symbol	Port size	Actuation/return	Flow (l/min)	Dimension No.	HNBR IEC 61508	HNBR Model *1)
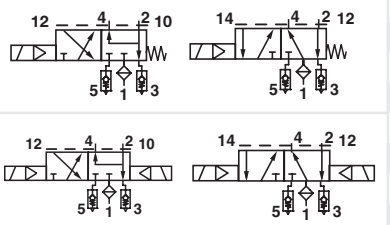	G1/4 NAMUR	Solenoid/spring	1300	12	x (without accessories)	9710901
	G1/4 NAMUR	Solenoid/solenoid	1300	13	–	9711901

Housing: Stainless steel

Symbol	Port size	Actuation/return	Flow (l/min)	Dimension No.	NBR IEC 61508	NBR Model *1)	HNBR IEC 61508	HNBR Model *1)
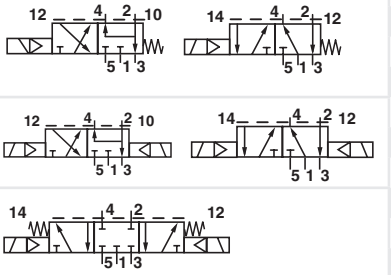	G1/4 NAMUR	Solenoid/spring	1300	8	x	9710705	x	9710405
	1/4 NPT NAMUR	Solenoid/spring	1300	8	x	9710715	x	9710415
	G1/4 NAMUR	Solenoid/solenoid	1300	10	–	9711705	–	9711405
	1/4 NPT NAMUR	Solenoid/solenoid	1300	10	–	9711715	–	9711415
	G1/4 NAMUR	Solenoid/solenoid (APB)	950	11	–	9712705	–	9712405
	1/4 NPT NAMUR	Solenoid/solenoid (APB)	950	11	–	9712715	–	9712415

Housing: Brass

Symbol	Port size	Actuation/return	Flow (l/min)	Dimension No.	NBR IEC 61508	NBR Model *1)	HNBR IEC 61508	HNBR Model *1)
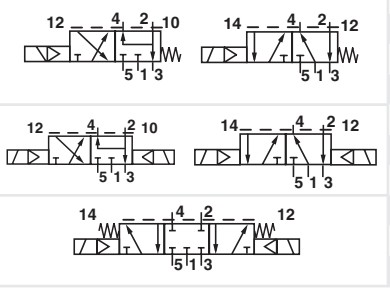	G1/4 NAMUR	Solenoid/spring	1300	8	x	9710605	–	–
	1/4 NPT NAMUR	Solenoid/spring	1300	8	x	9710615	–	–
	G1/4 NAMUR	Solenoid/solenoid	1300	10	–	9711605	–	–
	1/4 NPT NAMUR	Solenoid/solenoid	1300	10	–	9711615	–	–
	G1/4 NAMUR	Solenoid/solenoid (APB)	950	11	–	9712605	–	–

*1) When ordering please indicate solenoid, voltage and current type (frequency)
Valve function: APB = All Ports Blocked
3/2 or 5/2 way function (Conversion instructions see page 20)

Our policy is one of continued research and development. We therefore reserve the right to amend, without notice, the specifications given in this document. (2004 - 5118i) © 2020 Norgren GmbH

Option selector

971★★★★ ★★★★ ★★★ ★★

Function	Substitute
5/2 way with spring return (3/2 way with adapter plate for NAMUR flange)	0
5/2 way impuls (3/2 way with adapter plate for NAMUR flange)	1
5/3 way valve with spring return (APB)	2
3/2 way valve with spring return	3

Materials: Housing/Seals	Substitute
Aluminium/HNBR (-25...+ 80°C) *2)	2
Brass/HNBR (-25...+ 80°C) *2)	3
Stainless steel/HNBR (-25...+ 80°C) *2)	4
Aluminium/NBR (-40...+ 65°C) *3)	5
Brass/NBR (-40...+ 65°C) *3)	6
Stainless steel/NBR (-40...+ 65°C) *3)	7
Special version *4)	9

*2) IEC 61508: -25...+65°C or 0...+80°C
*3) IEC 61508: -40 ... +40°C
*4) IMI Precision Engineering internal use e.g. 971x901: Valve with inlet filter and exhaust guards according to customer requirement.
Valve function APB = All Ports Blocked

Air supply	Substitute
Internal	0
External (at 1/4" NAMUR version only possible with additional flange and through that a changed item number, except LPV, see page 7 and 8)	Z

Voltage	Substitute
24 V DC	024 0
230 V AC	230 5

Solenoid	Substitute
See solenoid table	

Version	Substitute
Without manual override (retrofit-table) *	5
Without manual override * only for 1/2 NPT NAMUR	6
Low power pilot (see page 7 and 8)	9

Port size	Substitute
G1/4 NAMUR	0
1/4 NPT NAMUR	1
G1/4	3
1/4 NPT	4
G1/2	5
1/2 NPT	6
G1/2 NAMUR	9
1/2 NPT NAMUR (in connection with version code 6)	9

*Manual override has to bee ordered separately, see page 9.

Our policy is one of continued research and development. We therefore reserve the right to amend, without notice, the specifications given in this document. (2004 - 5118i) © 2020 Norgren GmbH

Solenoids

	Power consumption 24 V DC (W)	230 V AC (VA)	Rated current 24 V DC (mA)	230 V AC (mA)	Protection class IP/NEMA	Ex-Protection (ATEX-Category)	Temperature Ambient/ Media (°C)	Electrical connection	Drawing No.	Circuit diagram No.	Model
	1,9	2,1 *5)	78	11	IP65 (with connector)	–	-25 ... +60	Connector DIN EN 175301-803, form A *6)	24	31/33	0763
	3,6	–	150	–	IP66	II 2G Ex mb IIC T4 Gb II 2D Ex mb IIIC T115°C Db	-20 ... +70	Cable length 3 m	25	32	0298
	–	5,3	–	18	IP66	II 2G Ex mb IIC T4 Gb II 2D Ex mb IIIC T115°C Db	-20 ... +70	Cable length 3 m	25	32	0299
	0,8	–	38	–	IP66 (with cable gland)	II 2G Ex eb mb IIC T5/T6 Gb II 2D Ex tb IIIC T130°C Db	T5: -40 ... +80 T6: -40 ... +70 -40 ... +80	M20 x 1,5 *6)	26	32	4200
	–	1,3	–	6	IP66 (with cable gland)	II 2G Ex eb mb IIC T5/T6 Gb II 2D Ex tb IIIC T130°C Db	T5: -40 ... +80 T6: -40 ... +70 -40 ... +80	M20 x 1,5 *6)	26	34	4201
	0,8	–	33	–	IP66 (with cable gland)	II 2G Ex db mb IIC T5/T6 Gb II 2G Ex eb mb IIC T5/T6 Gb II 2D Ex tb IIIC T130°C Db	T5: -40 ... +80 T6: -40 ... +70 -40 ... +80	1/2 NPT *6)	27	37	4600
	–	1,3	–	6	IP66 (with cable gland)	II 2G Ex db mb IIC T5/T6 Gb II 2G Ex eb mb IIC T5/T6 Gb II 2D Ex tb IIIC T130°C Db	T5: -40 ... +80 T6: -40 ... +70 -40 ... +80	1/2 NPT *6)	27	38	4601
	0,8	–	33	–	IP66 (with cable gland)	II 2G Ex db mb IIC T5/T6 Gb II 2G Ex eb mb IIC T5/T6 Gb II 2D Ex tb IIIC T130°C Db	T5: -40 ... +80 T6: -40 ... +70 -40 ... +80	M20 x 1,5 *6)	27	37	4602
	–	1,3	–	6	IP66 (with cable gland)	III 2G Ex db mb IIC T5/T6 Gb II 2G Ex eb mb IIC T5/T6 Gb II 2D Ex tb IIIC T130°C Db	T5: -40 ... +80 T6: -40 ... +70 -40 ... +80	M20 x 1,5 *6)	27	38	4603
	0,8	–	33	–	IP66 (with cable gland)	II 2 G Ex db mb IIC T4/T6 Gb II 2 G Ex eb mb IIC T4/T6 Gb	T4: -40 ... +80 T6: -40 ... +70	M20 x 1,5 *6)	29	32	4802
	–	1,3	–	6	IP66 (with cable gland)	II 2 G Ex db mb IIC T4/T6 Gb II 2 G Ex eb mb IIC T4/T6 Gb	T4: -40 ... +50 T6: -40 ... +40	M20 x 1,5 *6)	29	34	4803
	1,4	–	228	–	4X	Cl. I, Div. 1, Gr. A - D Cl. II/III, Div. 1, Gr. E - G T3C (160°C)	-20 ... +60	Flying leads length 460 mm	28	31	3720

Standard voltages (±10%) 24 V DC, 230 V AC, other voltages on request. Design according to VDE 0580, EN 50014/50028. 100% duty cycle.
*5) Required connector: type 0570275 for d.c.; type 0663303 for a.c., 200 V DC solenoid voltage must be ordered!
*6) Connector/cable gland is not scope of delivery, see table »Accessories★
Attention: The protection class for coil series 46xx and 48xx is determined by the choice of cable gland. Example: if an ATEX-certified cable gland is used that has Ex d type of protection, the solenoid will have the protection class Ex d mb; if a cable gland with Ex e type of proteciton is used, the solenoid will have protection class Ex e mb.

Approvals

Model	Approvals ATEX	IECEx	FM	Datasheet
0763	–	–	–	7.1.507
029x	KEMA 02 ATEX 1347 X	IECEx DEK 13.0014X	–	7.1.505
42xx	KEMA 98 ATEX 4452 X	IECEx KEM 09.0068X	–	7.1.580
372x, 382x	–	–	CSA-LR 57643-6	7.1.575
46xx	PTB 02 ATEX 2085 X	IECEx PTB 11.0094X	–	7.1.585
48xx	EPS 18 ATEX 1 019	IECEx EPS 18.0013	–	7.1.590

Our policy is one of continued research and development. We therefore reserve the right to amend, without notice, the specifications given in this document. (2004 - 5118i) © 2020 Norgren GmbH

Solenoid actuators for intrinsically-safe circuits

	Nominal resistance RN coil (Ω)	Min. required switching current (mA)	Resistance Rw 60 coil (Ω)	Required voltage at terminal Rw 60 (V)	IP Protection class	Ex-Protection (ATEX-Category)	Temperature Ambient/ Media (°C)	Drawing No.	Circuit diagram No.	Model
	200	33	240	8	IP66 (with cable gland)	II 2G Ex ia IIC T4/T6 Gb II 2D Ex ia IIIC T80°C Db II 2D Ex ia IIIC T100°C Db	T4: -40 ... +80 T6: -40 ... +60 -40 ... +60 -40 ... +80	30	35	2050
	391	24	460	11	IP66 (with cable gland)	II 2G Ex ia IIC T4/T6 Gb II 2D Ex ia IIIC T80°C Db II 2D Ex ia IIIC T100°C Db	T4: -40 ... +80 T6: -40 ... +60 -40 ... +60 -40 ... +80	30	35	2051
	736	17	880	15	IP66 (with cable gland)	II 2G Ex ia IIC T4/T6 Gb II 2D Ex ia IIIC T80°C Db II 2D Ex ia IIIC T100°C Db	T4: -40 ... +80 T6: -40 ... +60 -40 ... +60 -40 ... +80	30	35	2052
	1220	13	1460	19	IP66 (with cable gland)	II 2G Ex ia IIC T4/T6 Gb II 2D Ex ia IIIC T80°C Db II 2D Ex ia IIIC T100°C Db	T4: -40 ... +80 T6: -40 ... +60 -40 ... +60 -40 ... +80	30	35	2053

Cable gland (cable Ø 5 ... 10 mm) is in scope of delivery
When selecting an intrinsically safe power supply, the permissible maximum values according to the Certificate of Conformity should be taken into account.
Ui = 45 V, Ii = 500 mA according to Tab. A. 1, EN 60079-11
Pi = 2,0 W, Li and Ci can be ignored.

Approvals

Model	Approvals ATEX	IECEx	Datasheet
205x	PTB 07 ATEX 2019	IECEx PTB 07.0017	7.1.535

Partnumbers for international approval

Land/Approval	Coil/Code	029x	205x	208x	372x	42xx	46xx	48xx
Europa/ATEX	Standard	x	x	x	–	x	x	x
International/IECEx	Standard	x	x	x	–	x	x	x
China/NEPSI	-01	–	x	–	–	x	x	–
Brasilien/INMETRO	-02	–	x	–	–	x	x	–
Korea/KOSHA (only gas approval)	-03	–	x	–	–	x	x	x
Russland, Kasachstan & Weißrussland/TR-CU 012	-04	x	x	x	–	x	x	x
Indien/CCOE	Standard	–	x	–	–	x	x	–
Taiwan/ITRI	Standard	–	x	–	–	x	x	–
FM/USA	Standard	–	–	–	x	–	–	–
CSA/Kanada	Standard	–	–	–	x	–	–	–

Example: 0000000420002400-04
(Coil: 4200; Voltage: 24V DC; Approval: TR-CU 012)

Our policy is one of continued research and development. We therefore reserve the right to amend, without notice, the specifications given in this document. (2004 - 5118i) © 2020 Norgren GmbH

Technical data Inline version using low-power pilot system (page 8)

Seals NBR: -40 ... +65°C / IEC 61508: -40 ... +40°C
Seals HNBR: -25 ... +80°C / IEC 61508: -25 ... +65°C or 0 ... +80°C

Housing: Aluminium anodized

Symbol	Port size	Actuation/return	Flow (l/min)	Dimension No.	NBR IEC 61508	NBR Model *1)	HNBR IEC 61508	HNBR Model *1)
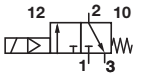	G1/4	Solenoid/spring	1300	14	–	9713539	–	9713239
	1/4 NPT	Solenoid/spring	1300	14	–	9713549	–	9713249
	G1/2	Solenoid/spring	2600	15	–	9713559	–	9713259
	1/2 NPT	Solenoid/spring	2600	15	–	9713569	–	9713269
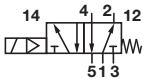	G1/4	Solenoid/spring	1300	16	–	9710539	–	9710239
	1/4 NPT	Solenoid/spring	1300	16	–	9710549	–	9710249
	G1/2	Solenoid/spring	2600	17	–	9710559	–	9710259
	1/2 NPT	Solenoid/spring	2600	17	–	9710569	–	9710269
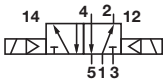	G1/4	Solenoid/solenoid	1300	18	–	9711539	–	9711239
	1/4 NPT	Solenoid/solenoid	1300	18	–	9711549	–	9711249

Technical data NAMUR version using low-power pilot system (page 8)

Seals NBR: -40 ... +65°C / IEC 61508: -40 ... +40°C
Seals HNBR: -25 ... +80°C / IEC 61508: -25 ... +65°C or 0 ... +80°C

Housing: Aluminium anodized

Symbol	Port size	Actuation/return	Flow (l/min)	Dimension No.	NBR IEC 61508	NBR Model *1)	HNBR IEC 61508	HNBR Model *1)
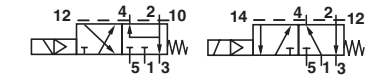	G1/4 NAMUR	Solenoid/spring	1300	19	–	9710509	–	9710209
	1/4 NPT NAMUR	Solenoid/spring	1300	19	–	9710519	–	9710219
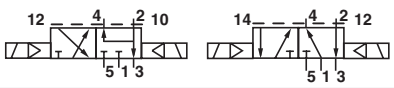	G1/4 NAMUR	Solenoid/solenoid	1300	20	–	9711509	–	9711209
	1/4 NPT NAMUR	Solenoid/solenoid	1300	20	–	9711519	–	9711219
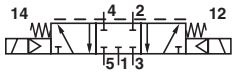	G1/4 NAMUR	Solenoid/solenoid (APB)	950	21	–	9712509	–	9712209
	1/4 NPT NAMUR	Solenoid/solenoid (APB)	950	21	–	9712519	–	9712219

*1) When ordering please indicate solenoid, voltage and current type (frequency)
Valve function: APB = All Ports Blocked
3/2 or 5/2 way function (Conversion instructions see page 20)

Our policy is one of continued research and development. We therefore reserve the right to amend, without notice, the specifications given in this document. (2004 - 5118i) © 2020 Norgren GmbH

Low-power pilot system in protection class II 2G Ex ia IIC T4/T6

	Power P (mW)	Switch-on voltage U on (V)	Switch-off voltage U off (V)	Rated current I on (mA)	Resistance coil R (Ω)	IP Protection class	Ex-Protection (ATEX-Category)	Temperature Ambient/Media (°C)	Circuit diagram No.	Model
	6,3 (+20°C)	≥ 4,3 (+20°C) ≥ 5,2 (+80°C)	≤ 1,44 (+20°C) ≤ 1,2 (-25°C)	≥ 1,45	2800	IP65 (with cable gland)	II 2G Ex ia IIC T4/T6	T4: -40 ... +80°C T6: -40 ... +60°C	36	2085
	23,2 (+20°C)	≥ 16 (+20°C) ≥ 16,8 (+80°C)	≤ 5,4 (+20°C) ≤ 4,7 (-25°C)	≥ 1,45	10900	IP65 (with cable gland)	II 2G Ex ia IIC T4/T6	T4: -40 ... +80°C T6: -40 ... +60°C	36	2086

Cable gland (cable Ø 5 ... 10 mm) is in scope of delivery

Approvals

Typ	Approvals ATEX	Datenblatt
208x	PTB 06 ATEX 2001U	7.1.540

Ordering example

9710549	2085	005	00
Ventil	Pilot 6,3 mW	Standard	00 internal air supply

Max. values Ex i

Ui (V)	Ii (mA)	Pi *7) (mW)
25	150	250
27	125	250
28	115	250
30	100	250
32	85	250

Air consumption: home position ≤ 60 l/h, operating position ≤ 15 l/h
*7) Model 2086 without Pi limiting. Ci and Li can be ignored.

Partnumbers for international approval

Land/Approval	Coil/Code	029x	205x	208x	372x	42xx	46xx	48xx
Europa/ATEX	Standard	x	x	x	–	x	x	x
International/IECEx	Standard	x	x	x	–	x	x	x
China/NEPSI	-01	–	x	–	–	x	x	–
Brasilien/INMETRO	-02	–	x	–	–	x	x	–
Korea/KOSHA (only gas approval)	-03	–	x	–	–	x	x	x
Russland, Kasachstan & Weißrussland/TR-CU 012	-04	x	x	x	–	x	x	x
Indien/CCOE	Standard	–	x	–	–	x	x	–
Taiwan/ITRI	Standard	–	x	–	–	x	x	–
FM/USA	Standard	–	–	–	x	–	–	–
CSA/Kanada	Standard	–	–	–	x	–	–	–

Example: 0000000420002400-04
(Coil: 4200; Voltage: 24V DC; Approval: TR-CU 012)

Our policy is one of continued research and development. We therefore reserve the right to amend, without notice, the specifications given in this document. (2004 - 5118i) © 2020 Norgren GmbH

Cable gland (please order separatly)

Cable gland
Protection class Ex e, Ex d (ATEX),
Nickel plated brass/ stainless steel



Page 20

For solenoid	Thread	Cable Ø (mm)	Material	Protection class (ATEX)	Ambient temperatur limitation *8)	Model
42xx	M20 x 1,5	7,0 ... 12,0	Plastic	II 2G Ex e / II 2D Ext	Siehe Tabelle	0589735
42xx	M20 x 1,5	10,0 ... 14,0	Plastic	II 2G Ex e / II 2D Ext	Siehe Tabelle	0589736
42xx	M20 x 1,5	6,0 ... 12,0	Plastic	II 2G Ex e / II 2D Ext	Siehe Tabelle	0589737
42xx	M20 x 1,5	5,0 ... 10,0	Plastic	II 2G Ex e / II 2D Ext	Siehe Tabelle	0589739
46xx	M20 x 1,5	5,0 ... 14,0	Nickel plated brass	II 2G Ex e / II 2D Ext	-	0589654
46xx	M20 x 1,5	10,0 ... 14,0	Nickel plated brass	II 2G Ex d / II 2D Ext	-	0588851
46xx	1/2 NPT	7,5 ... 11,9	Nickel plated brass	II 2G Ex d / II 2D Ext	-	0588925
46xx, 48xx	M20 x 1,5	9,0 ... 13,0	Stainless steel 1.4571	II 2G Ex e / II 2D Ext	-	0589385
46xx, 48xx	M20 x 1,5	7,0 ... 12,0	Stainless steel 1.4404	II 2G Ex d / II 2D Ext	-	0589395
46xx, 48xx	M20 x 1,5	10,0 ... 14,0	Stainless steel 1.4404	II 2G Ex d / II 2D Ext	-	0589387

*8) The limitation of the temperature range to the mentioned range is due to the self-heating of the solenoid.

Connector
DIN EN 175301-803



0570275, form A
0663303, form A with rectifier)

Other connectors see datasheet 7.1.507

For solenoid	Ambient temperatur limitation solenoid 42xx		
	0589735 & 0589736 *9)	0589737	0589739 *9)
420x/425x	T5 & Dust Ex:-35°C...+80°C T6: -35°C ... +70°C	T5 & Dust Ex:-40°C...+68°C T6: -40°C...+68°C	T5 & Dust Ex:-40°C...+78°C T6: -40°C...+70°C

*9) Tested for the lower level of mechanical risk (4 joule), an additional protection against impacts might be needed.

Valve

Silencer (Plastic) *10)	Silencer (Stainless steel) *10)	Silencer (Brass) *10)	Exhaust guard *11)
			
Page 22	**Page 22**	**Page 22**	**Page 22**
M/S2 (G1/4)	0014613 (G1/4)	T40C2800 (G1/4)	0613422 (G1/4, 1/4 NPT)
C/S2 (1/4 NPT)	0613678 (1/4 NPT)	MS002A (1/4 NPT)	0613423 (G1/2, 1/2 NPT)
M/S4 (G1/2)	0014813 (G 1/2)	T40C4800 (G 1/2)	
C/S4 (1/2 NPT)	0613679 (1/2 NPT)	MS004A (1/2 NPT)	

*10) For indoors use only
*11) For outdoors use, opening pressure ~ 0,2 bar

Manual override (without detent)	Manual override (with detent, return at pressure fails)	Manual override (with detent) *12)	Manual override (for start-up only)
			
Page 17	**Page 17**	**Page 17**	**Page 17**
0553886	0553887	0614084	0613379

*12) See function description 75036430
Using the manual override with detent cancels the SIL-approval!
The manual override is meant to be used for system testing.

NAMUR Accessories (only G1/4)

Throttle control plate *13)	Flange plate	Yoke	Mounting plate	Quick exhaust module *14)
				
Page 21	**Page 20**	**Page 21**	**Page 21**	**Page 21**
4040239	0612790 (NAMUR single connection plate)	0540593 (Pipe mounting use in combination with 0612790)	0613453 (90°)	4050218
	0612791 (NAMUR-rip use in combination with 0612790)			

*13) The throttle control plate 4040239 has a minimum flow rate for safety reason.
*14) Technical data see datasheet 5.4.820.

Our policy is one of continued research and development. We therefore reserve the right to amend, without notice, the specifications given in this document. (2004 - 5118i) © 2020 Norgren GmbH

Dimensions vaves

Dimensions in mm
Projection/First angle

1

Weight: Aluminium anodized: 0,5 kg, Stainless steel: 1,1 kg, Brass: 1,0 kg

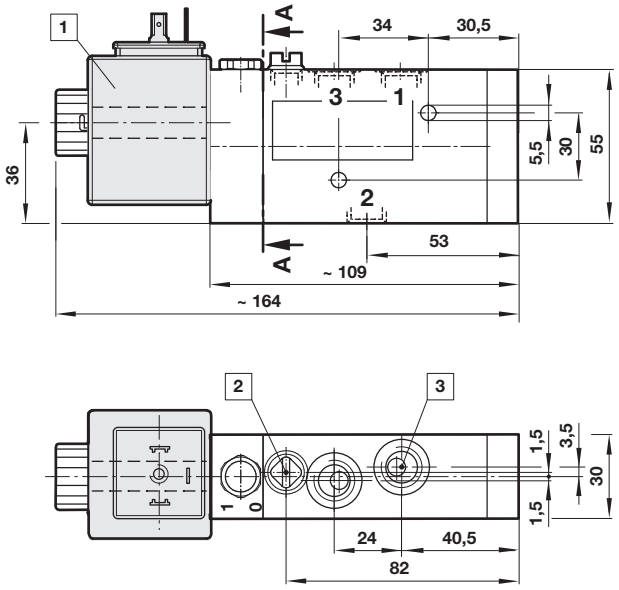

2

Weight: Aluminium anodized: 0,5 kg, Stainless steel: 1,1 kg, Brass: 1,0 kg

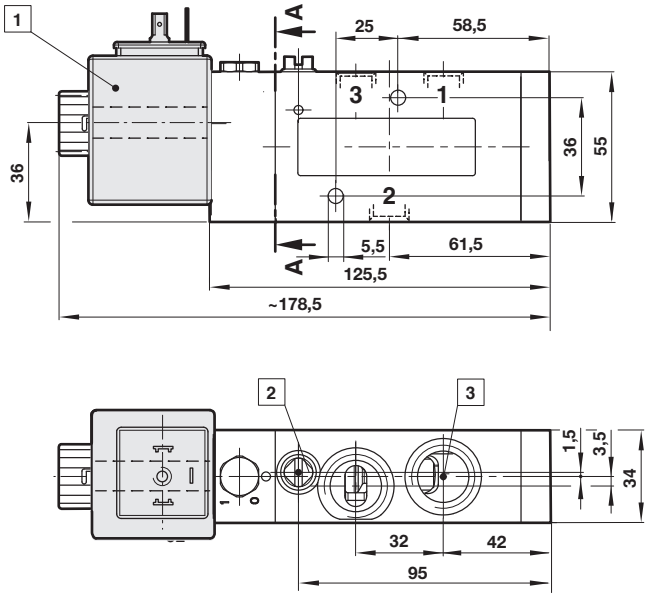

3

Weight: Aluminium anodized: 0,7 kg, Stainless steel: 1,8 kg, Brass: 1,7 kg

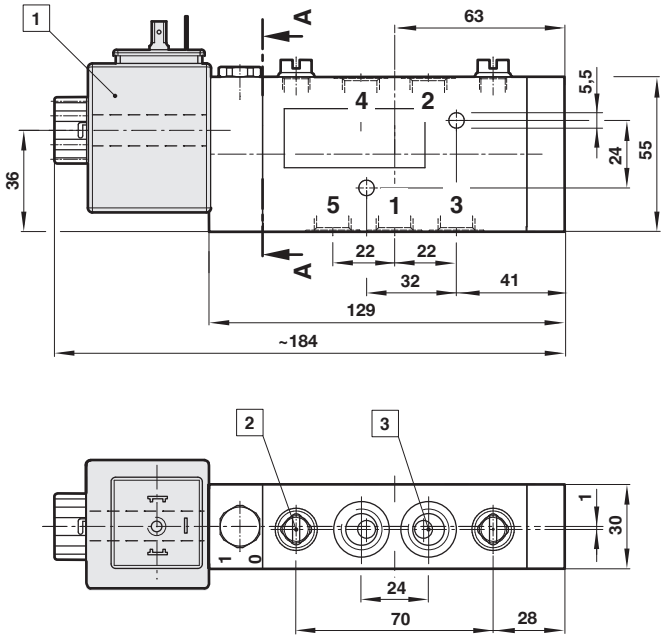

4

Weight: Aluminium anodized: 0,7 kg, Stainless steel: 1,8 kg, Brass: 1,7 kg

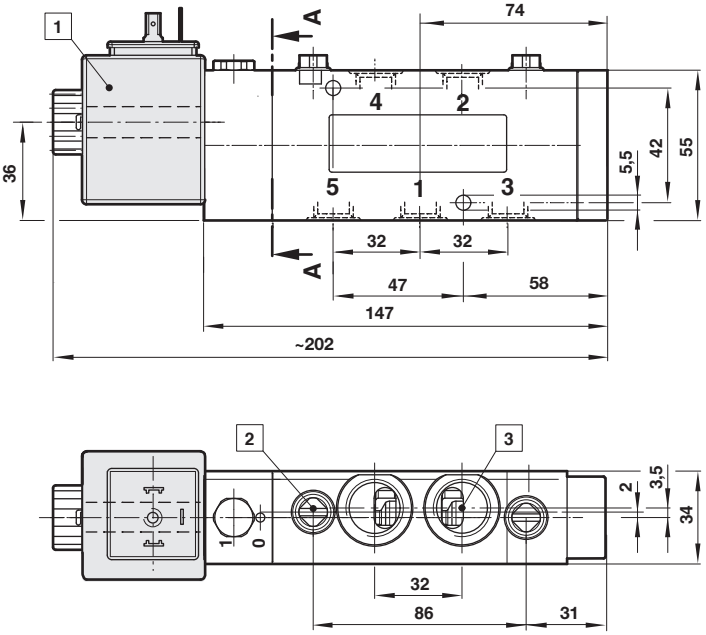

A - A

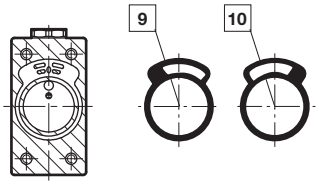

1 Solenoid dimensions on page 18
2 External control pressure connection G1/8, 1/8 NPT
3 Working port G1/4, G1/2 or 1/4 NPT, 1/2 NPT
9 Position of gasket internal pilot air
10 Position of gasket external pilot air

Our policy is one of continued research and development. We therefore reserve the right to amend, without notice, the specifications given in this document. (2004 - 5118i) © 2020 Norgren GmbH

Dimensions in mm
Projection/First angle

5

Weight: Aluminium anodized: 0,7 kg, Stainless steel: 1,8 kg, Brass: 1,7 kg

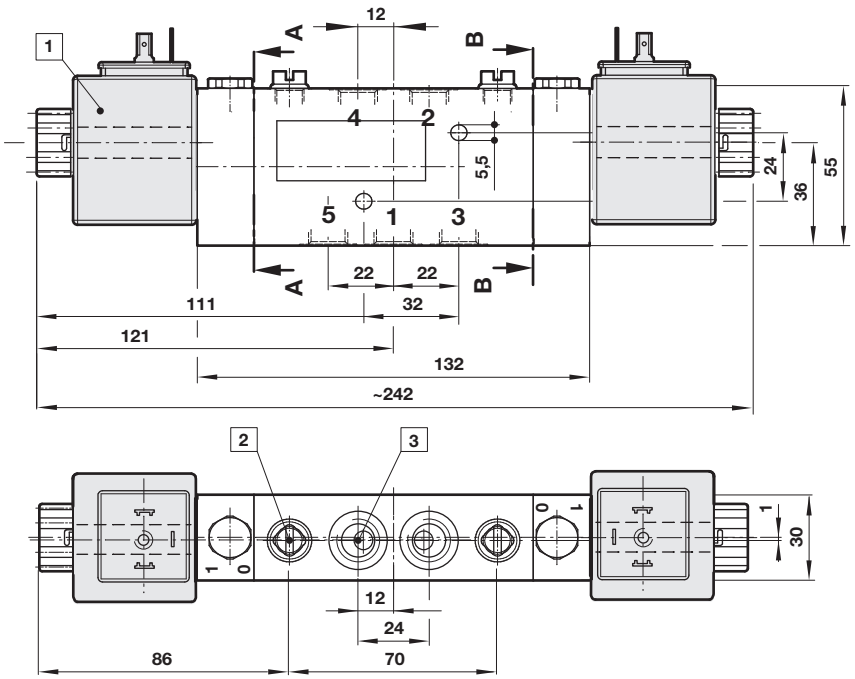

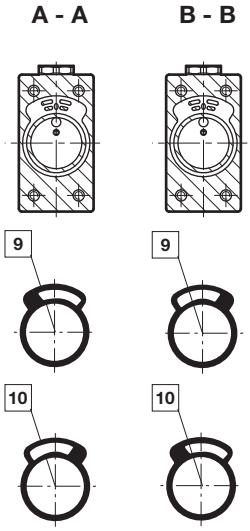

6

Weight: Aluminium anodized: 0,8 kg, Stainless steel: 1,9 kg, Brass: 1,8 kg

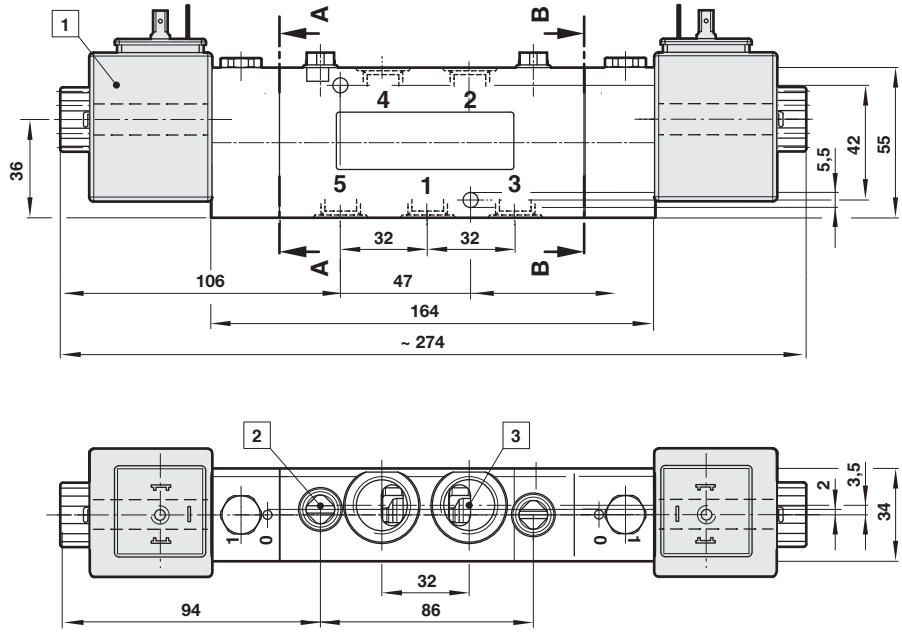

1 Solenoid dimensions on page 18
2 External control pressure connection G1/8, 1/8 NPT
3 Working port G1/4, G1/2 or 1/4 NPT, 1/2 NPT
9 Position of gasket internal pilot air
10 Position of gasket external pilot air

Our policy is one of continued research and development. We therefore reserve the right to amend, without notice, the specifications given in this document. (2004 - 5118i) © 2020 Norgren GmbH

NORGREN

Dimensions in mm
Projection/First angle

7

Weight: Aluminium anodized: 0,7 kg

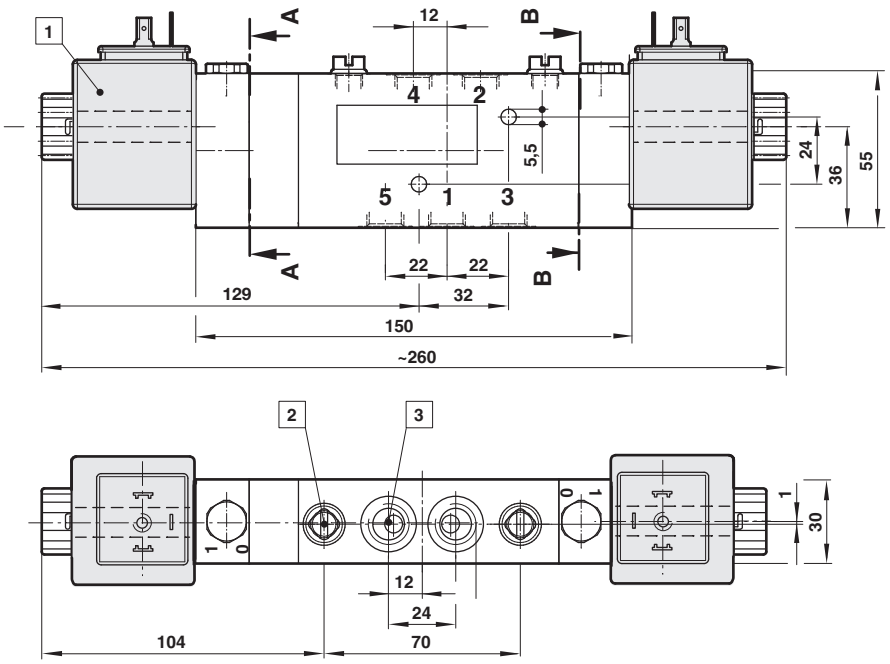

8

Weight: Aluminium anodized: 0,45 kg, Stainless steel: 1,0 kg, Brass: 1,0 kg

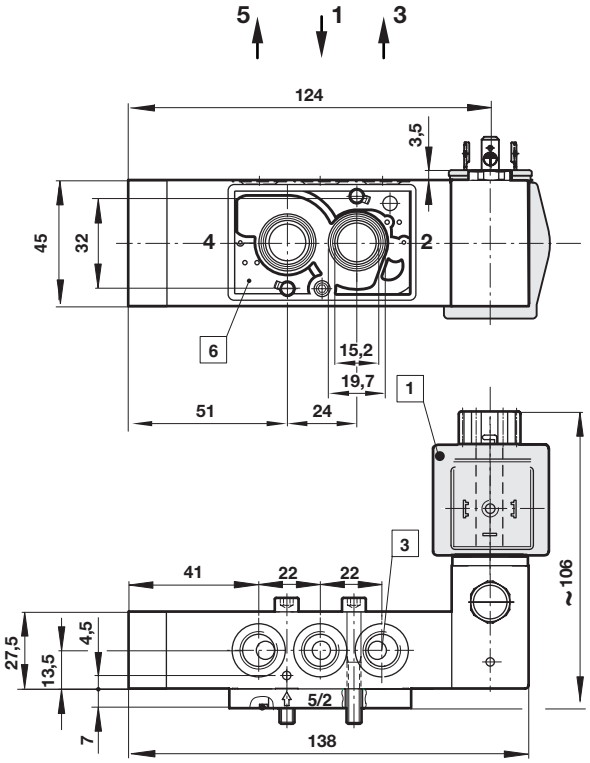

9

Weight: Aluminium anodized: 0,8 kg

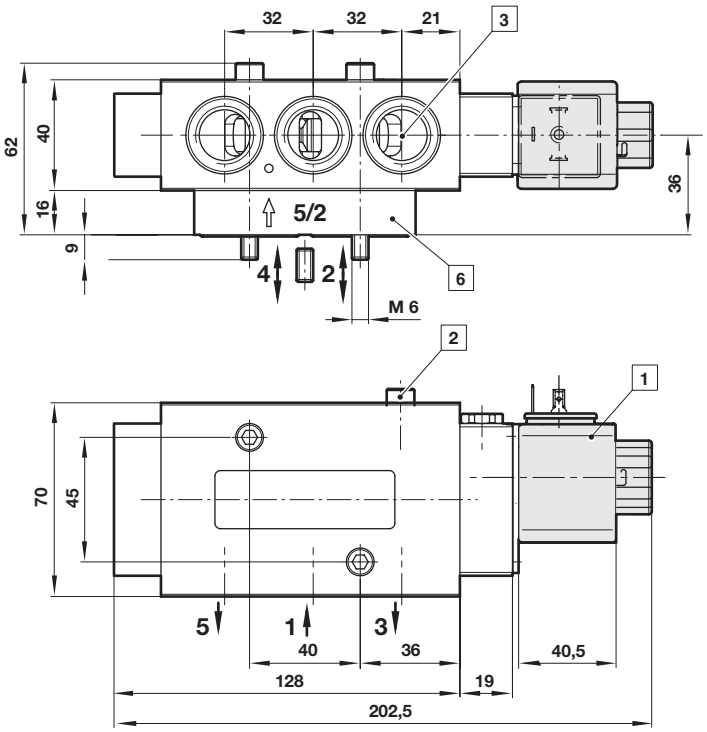

1 Solenoid dimensions on page 18
2 External control pressure connection G1/8 oder 1/8 NPT
3 Working port G1/4, G1/2 or 1/4 NPT, 1/2 NPT
6 NAMUR connection plate 3/2 or 5/2 way function
9 Position of gasket internal pilot air
10 Position of gasket external pilot air

Our policy is one of continued research and development. We therefore reserve the right to amend, without notice, the specifications given in this document. (2004 - 5118i) © 2020 Norgren GmbH

Dimensions in mm
Projection/First angle

10

Weight: Aluminium anodized: 0,65 kg, Stainless steel: 1,4 kg, Brass: 1,4 kg

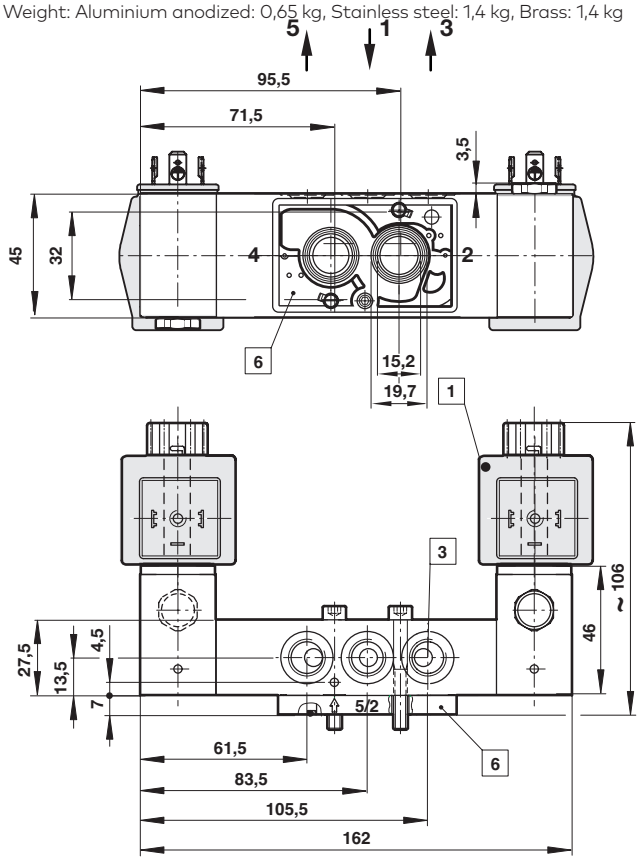

Weight: Aluminium anodized: 0,45 kg

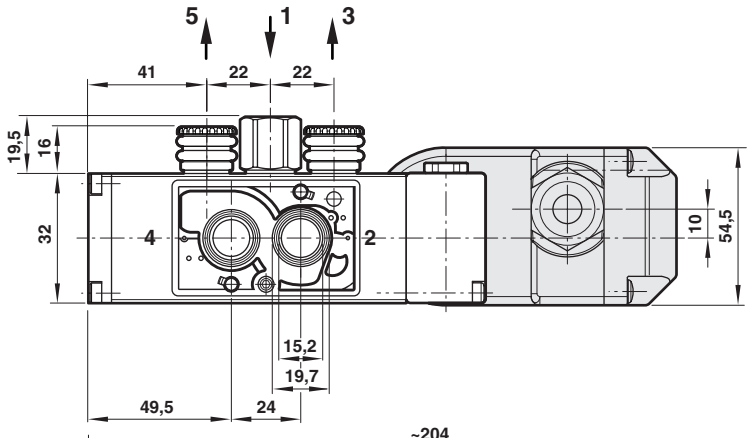

11

Weight: Aluminium anodized: 0,7 kg, Stainless steel: 1,5 kg, Brass: 1,5 kg

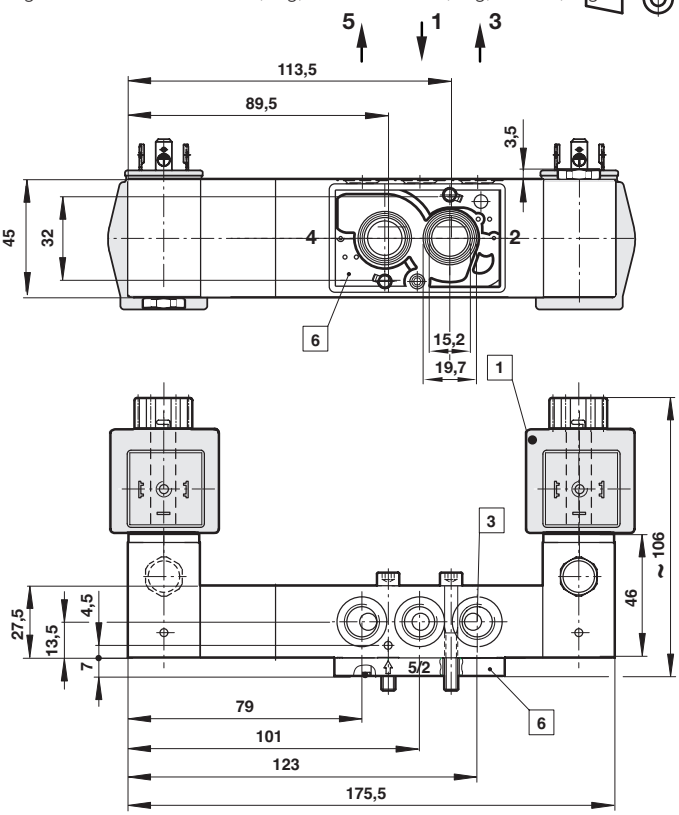

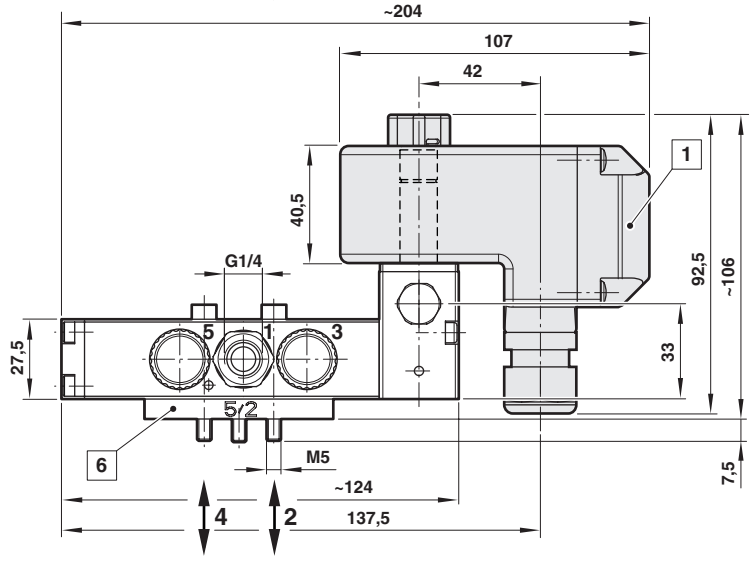

1 Dimesions for solenoids see page 18
3 Working port G1/4 or 1/4 NPT
6 NAMUR connection plate 3/2 or 5/2 way function

Our policy is one of continued research and development. We therefore reserve the right to amend, without notice, the specifications given in this document. (2004 - 5118i) © 2020 Norgren GmbH

NORGREN

13

Weight: Aluminium anodized: 0,65 kg

Dimensions in mm
Projection/First angle

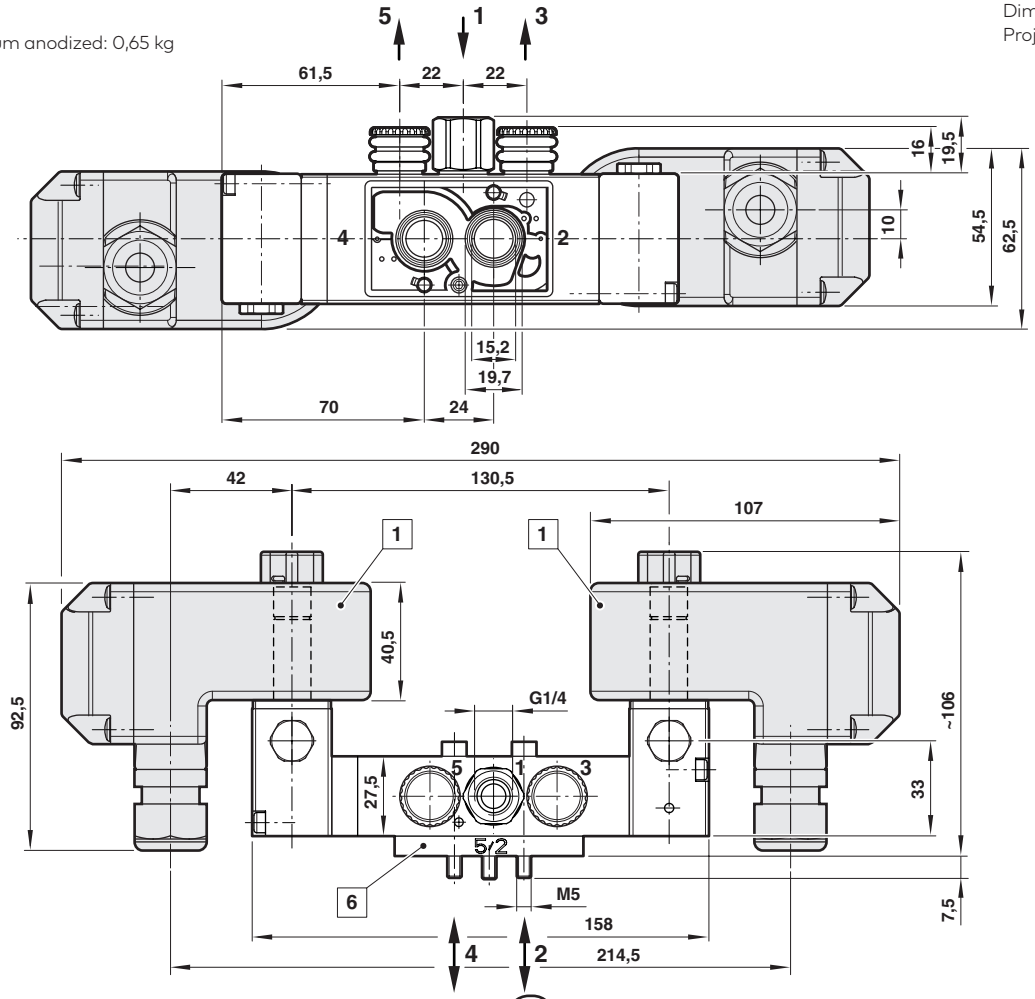

14

Weight: Aluminium anodized: 0,5 kg, Stainless steel: 0,5 kg, Brass: 0,5 kg

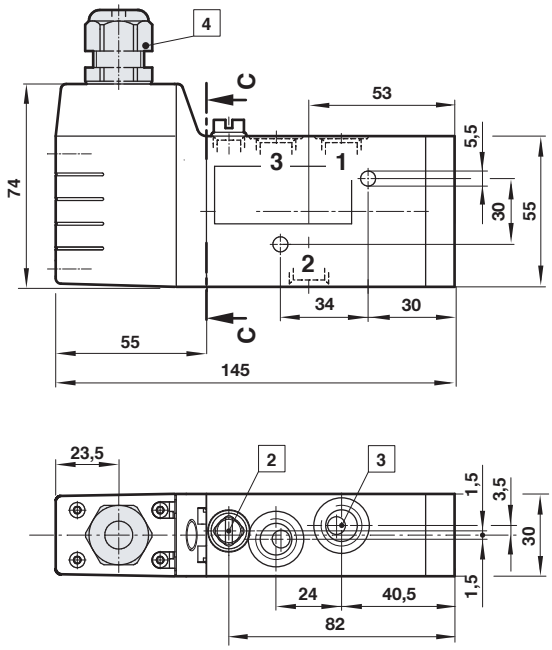

15

Weight: Aluminium anodized: 0,5 kg, Stainless steel: 0,5 kg, Brass: 0,5 kg

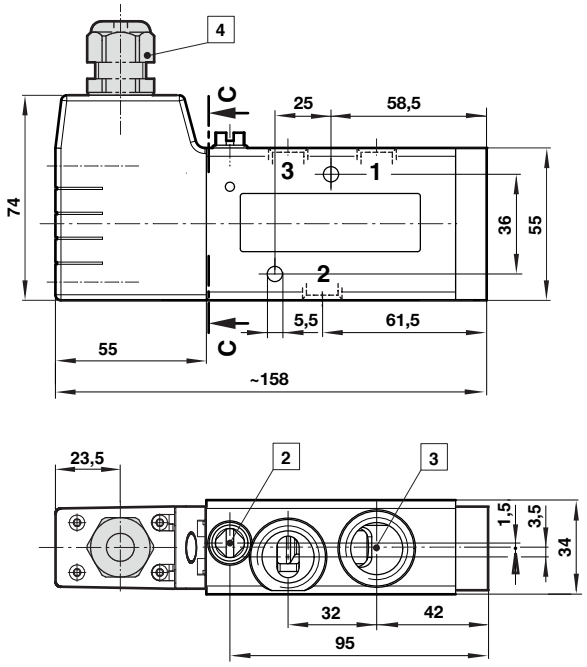

1 Solenoid dimensions on page 18
2 External control pressure connection G1/8, 1/8 NPT
3 Working port G1/4, G1/2 or 1/4 NPT, 1/2 NPT
6 NAMUR connection plate 3/2 or 5/2 way function
9 Position of gasket internal pilot air
10 Position of gasket external pilot air

Our policy is one of continued research and development. We therefore reserve the right to amend, without notice, the specifications given in this document. (2004 - 5118i) © 2020 Norgren GmbH

Dimensions in mm
Projection/First angle

16

Weight: Aluminium anodized: 0,7 kg

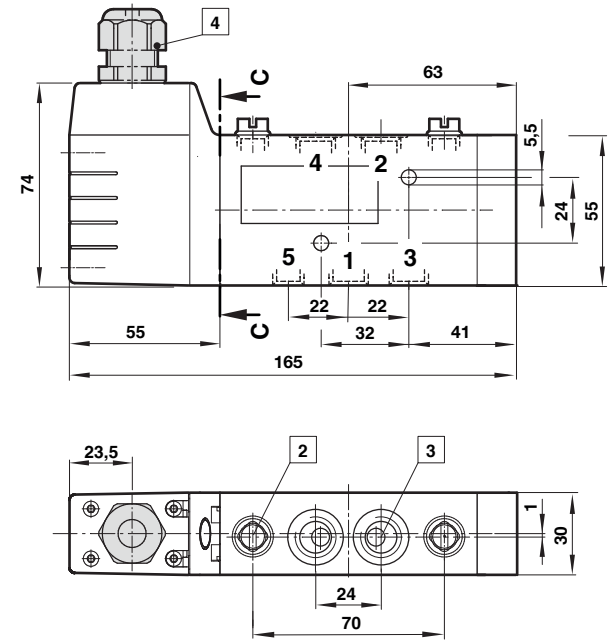

17

Weight: Aluminium anodized: 0,7 kg

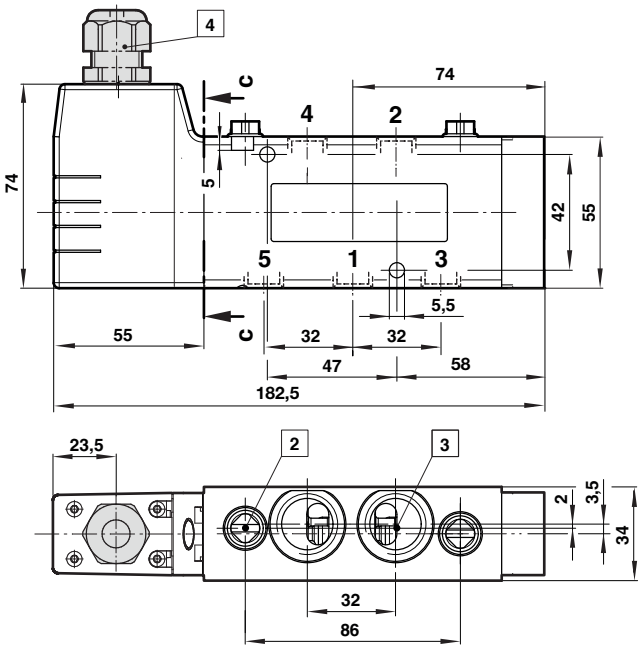

C-C

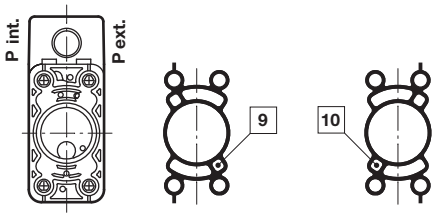

005

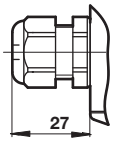

18

Weight: Aluminium anodized: 0,7 kg

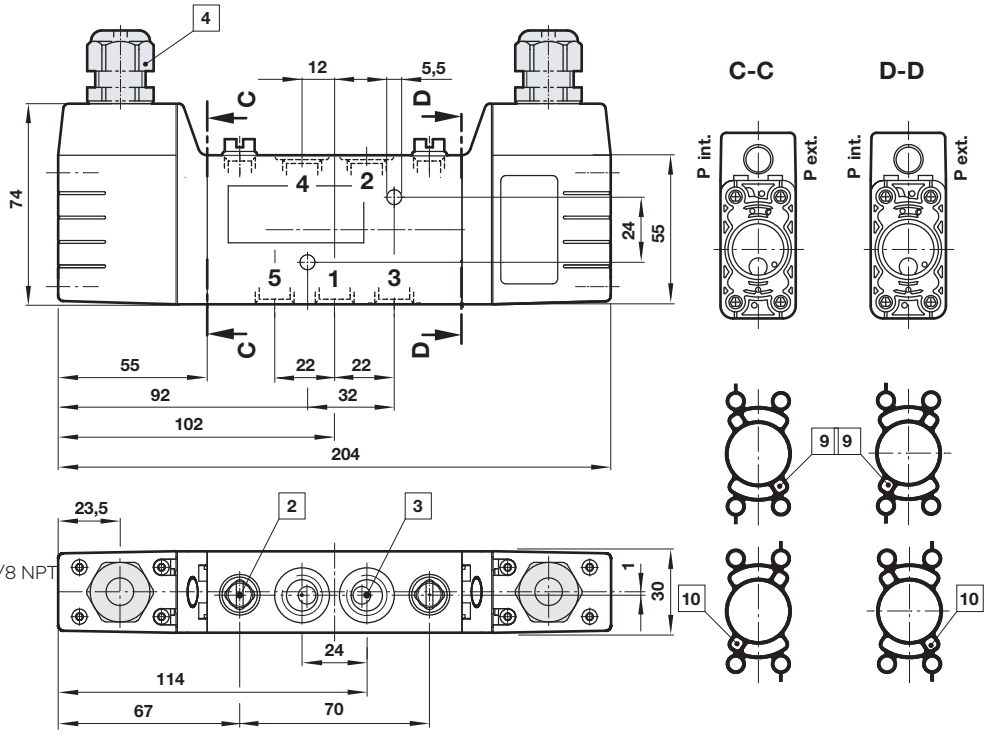

1 Solenoid dimensions on page 18
2 External control pressure connection G1/8, 1/8 NPT
3 Working port G1/4, G1/2 or 1/4 NPT, 1/2 NPT
4 Electrical connection 005
9 Position of gasket internal pilot air
10 Position of gasket external pilot air

Our policy is one of continued research and development. We therefore reserve the right to amend, without notice, the specifications given in this document. (2004 - 5118i) © 2020 Norgren GmbH

(19) Weight: Aluminium anodized: 0,45 kg

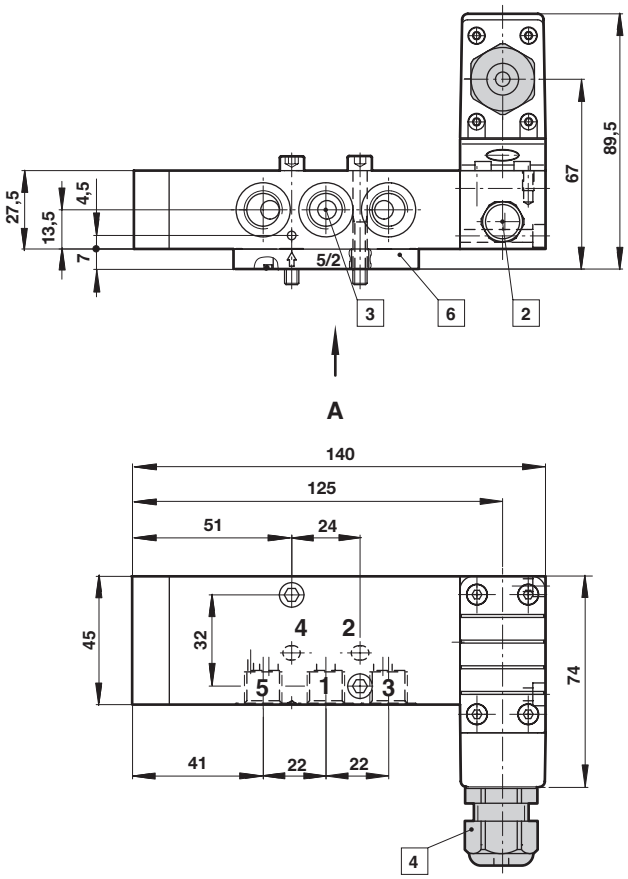

(20) Weight: Aluminium anodized: 0,65 kg

Dimensions in mm
Projection/First angle

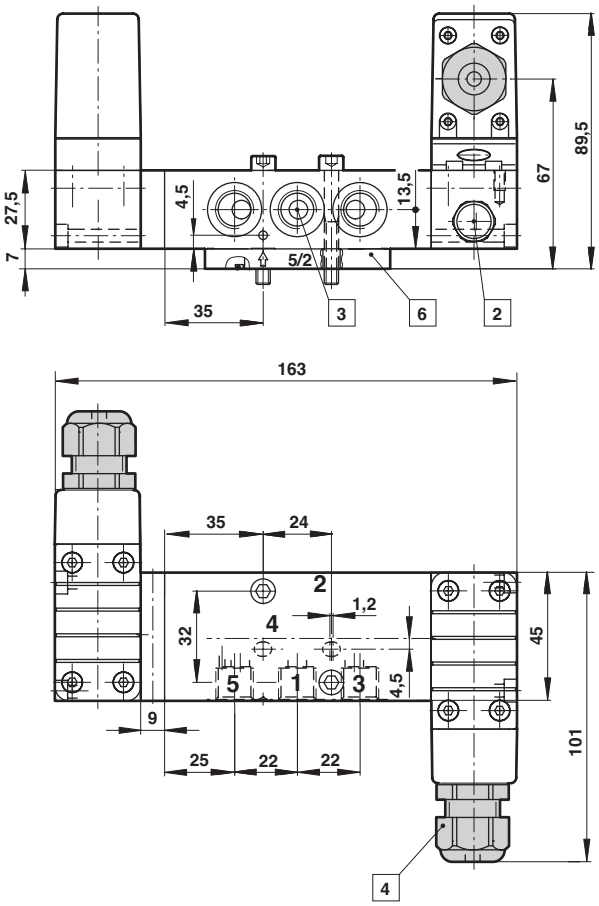

2 External control pressure connection G1/8 or 1/8 NPT
3 Working port G1/4 or 1/4 NPT
4 Electrical connection 005
6 NAMUR connection plate 3/2 or 5/2 way function
9 Position of gasket internal pilot air
10 Position of gasket external pilot air

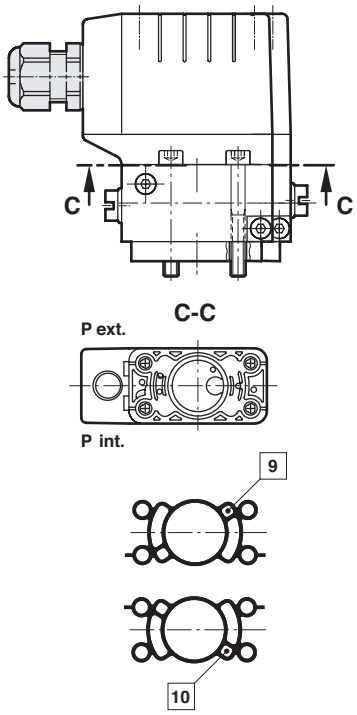

Electrical connection

005

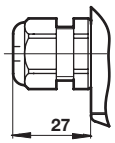

Our policy is one of continued research and development. We therefore reserve the right to amend, without notice, the specifications given in this document. (2004 - 5118i) © 2020 Norgren GmbH

NORGREN

21

Weight: Aluminium anodized: 0,7 kg

Dimensions in mm
Projection/First angle

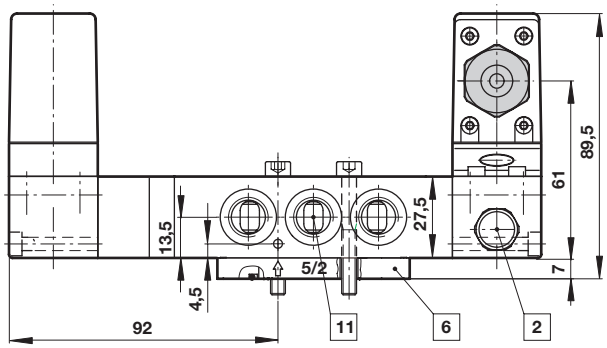

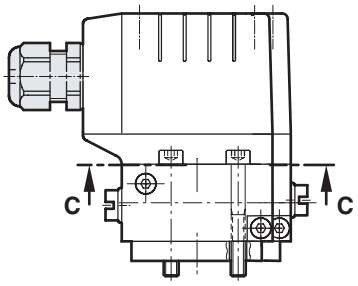

C-C

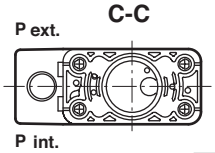

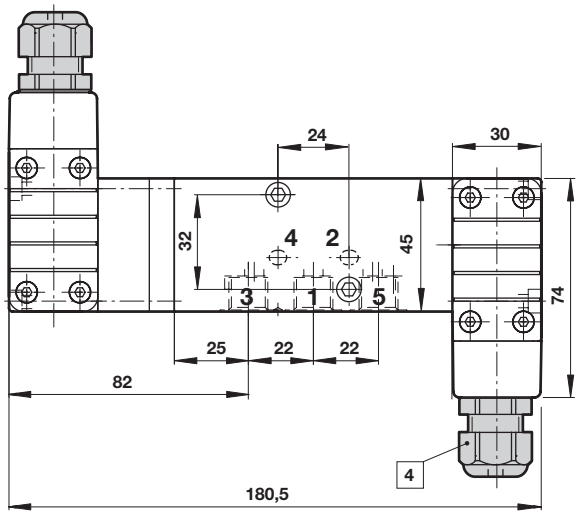

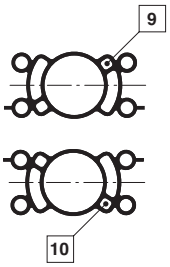

2 External control pressure connection G1/8 or 1/8 NPT
3 Working port G1/2 or 1/2 NP
4 Electrical connection 005
6 NAMUR connection plate 3/2 or 5/2 way function
9 Position of gasket internal pilot air
10 Position of gasket external pilot air
11 Working port G1/4 or 1/4 NPT

Electrical connection

005

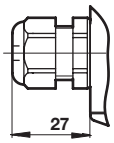

Manual override

Model: 0553886

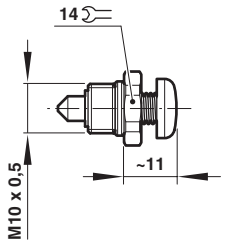

Model: 0553887

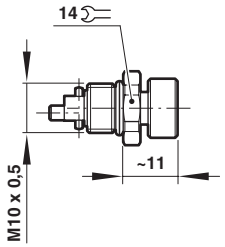

Model: 0614084

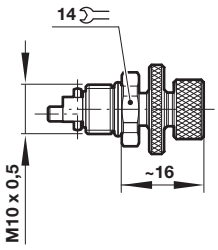

Model: 0613379

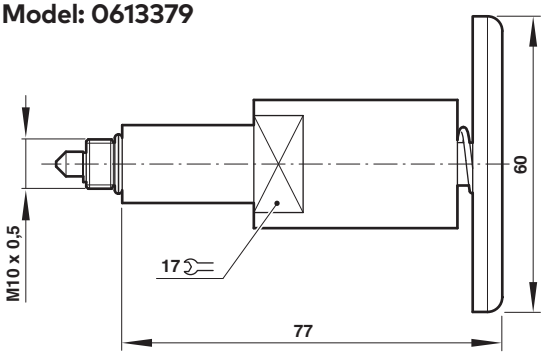

Our policy is one of continued research and development. We therefore reserve the right to amend, without notice, the specifications given in this document. (2004 - 5118i) © 2020 Norgren GmbH

Dimensions
Solenoids

Dimensions in mm
Projection/First angle

24
Weight: 0,3 kg

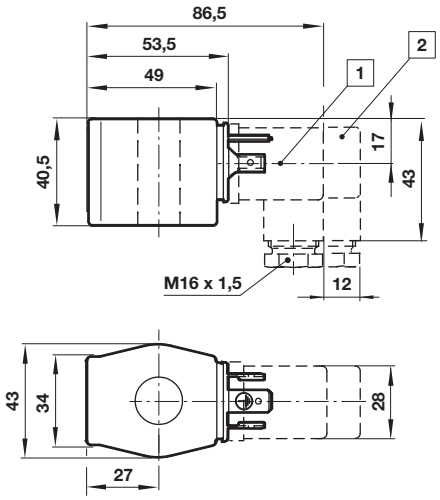

25
Weight: 0,4 kg

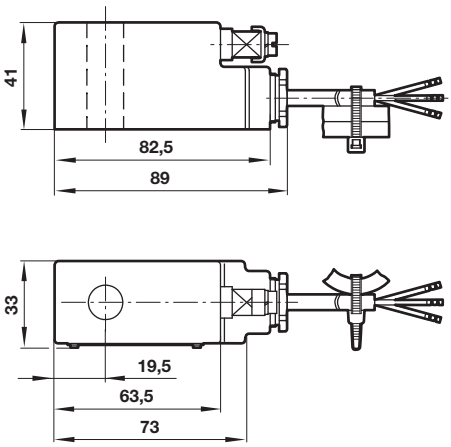

26
Weight: 0,6 kg

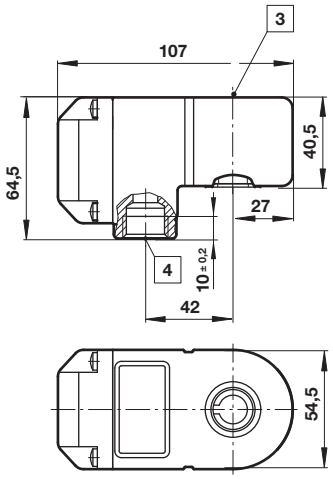

27
Weight: 0,8 kg

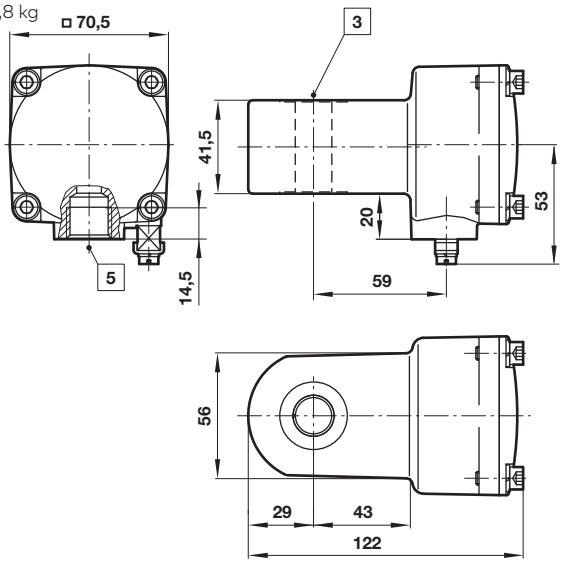

28
Weight: 0,4 kg

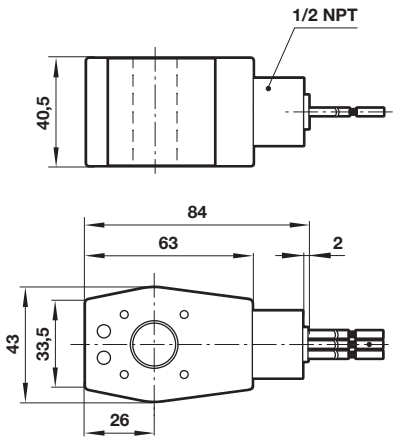

29
Weight: 1,2 kg

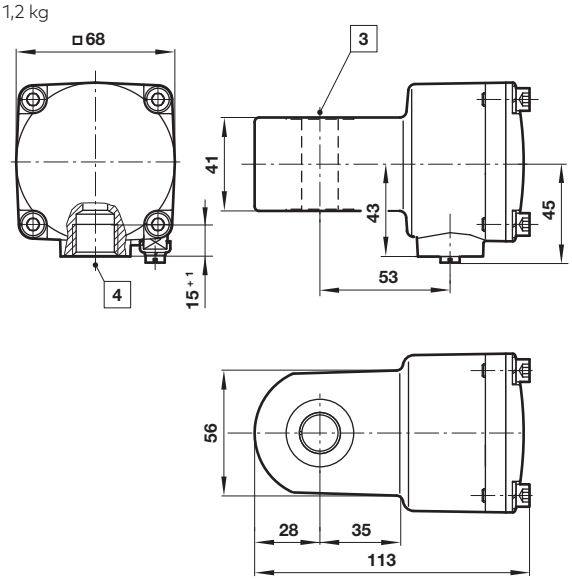

1 Connector 4 x 90° turnable
2 Connector with rectifier (0663303)
3 Ø 13 (with spacer tube)
4 M20 x 1,5
5 M20 x 1,5 or 1/2 NPT

Our policy is one of continued research and development. We therefore reserve the right to amend, without notice, the specifications given in this document. (2004 - 5118i) © 2020 Norgren GmbH

NORGREN

30

Weight: 0,85 kg

Dimensions in mm
Projection/First angle

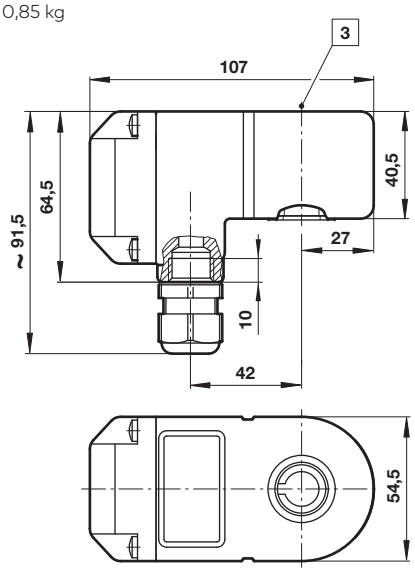

3 Ø 13 (with spacer tube)

Circuit diagrams

31

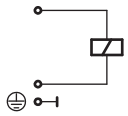

32

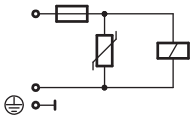

33

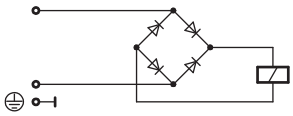

34

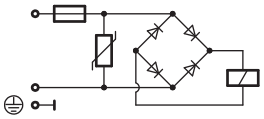

35

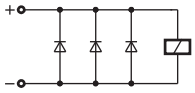

36

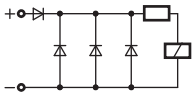

37

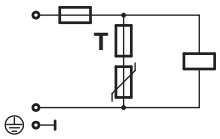

38

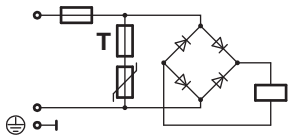

Cable gland

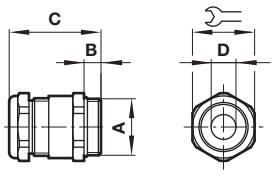

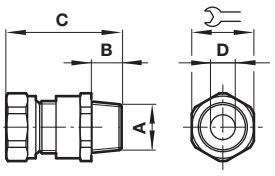

0588925 only

A	B	C	ø D		Model
M20 x 1,5	10	40	7,0 ... 12,0	24	0589735
M20 x 1,5	10	43	10,0 ... 14,0	27	0589736
M20 x 1,5	10	40	6,0 ... 12,0	24	0589737
M20 x 1,5	10	39,5	5,0 ... 10,0	24	0589739
M20 x 1,5	6,5	35,5	5,0 ...14,0	24	0589654
M20 x 1,5	12	37	9,0 ... 14,0	30	0588851
1/2 NPT	15	58	7,5 ... 11,9	24	0588925
M20 x 1,5	6,5	27,5	9,0 ... 13,0	22	0589385
M20 x 1,5	16	40	7,0 ... 12,0	24	0589395
M20 x 1,5	16	41	10,0 ... 14,0	24	0589387

Our policy is one of continued research and development. We therefore reserve the right to amend, without notice, the specifications given in this document. (2004 - 5118i) © 2020 Norgren GmbH

NAMUR hole pattern (actuator side)

Dimensions in mm
Projection/First angle

Port size 1/4"

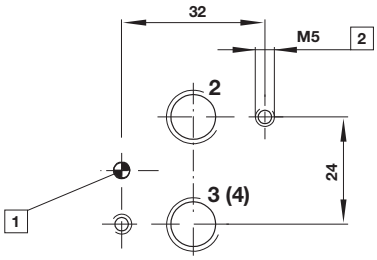

Port size 1/2"

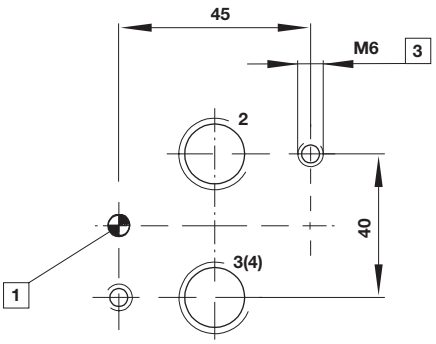

1 Coding stud threaded
2 8 mm deep
3 10 mm deep

NAMUR quick exhaust module for a better kv-value by exhaust see data sheet 5.4.820

NAMUR interlinking plates in redundancy design for »safety exhausting★ and »safety ventilating★ see data sheet 5.4.830

Conversion instructions of 5/2 into 3/2 way function

5/2 way function (original mode of supply)

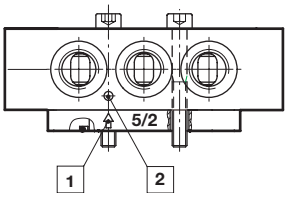

3/2 way function

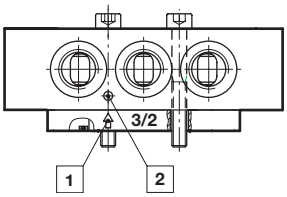

3/2 resp. 5/2 way function according to version by swapping or turning enclosed adaptor plates. Make sure Marker and Arrow do match as shown on above drawing.

1 Arrow
2 Marker

Single connection plate Model: 0612790

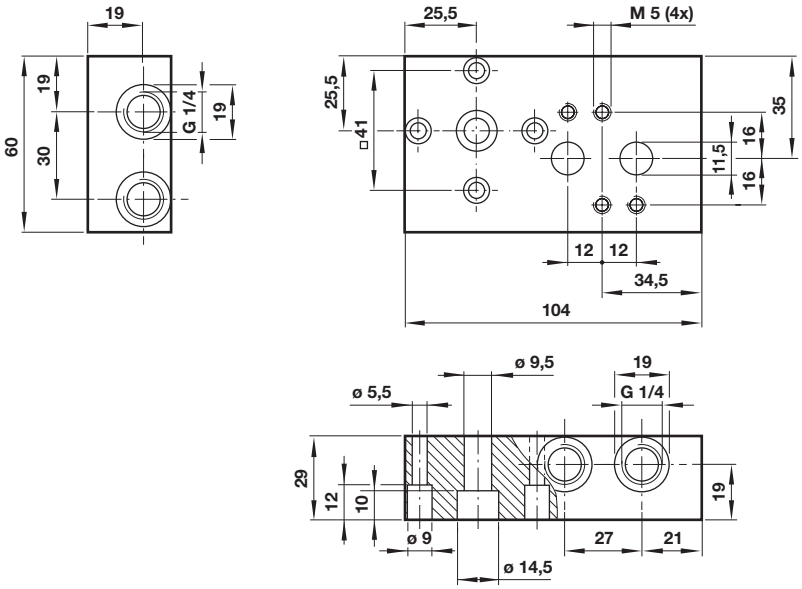

NAMUR slot in connection with 0612790 Model: 0612791

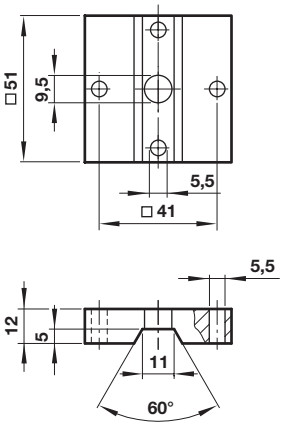

Our policy is one of continued research and development. We therefore reserve the right to amend, without notice, the specifications given in this document. (2004 - 5118i) © 2020 Norgren GmbH

Yoke
in connection with
0612790
Model: 0540593

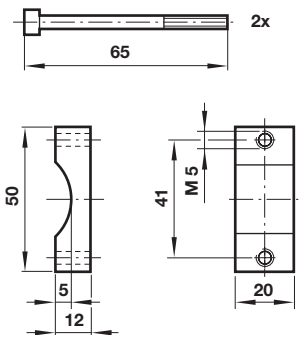

Throttle control plate
Model: 4040239

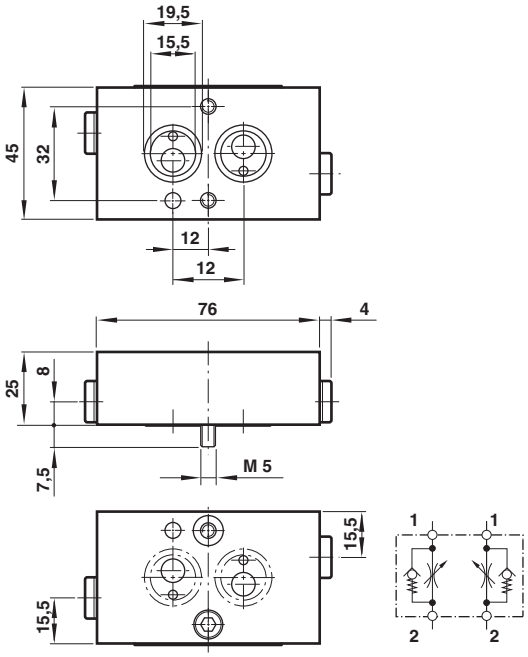

90° Mounting plate
Model: 0613453

Dimensions in mm
Projection/First angle

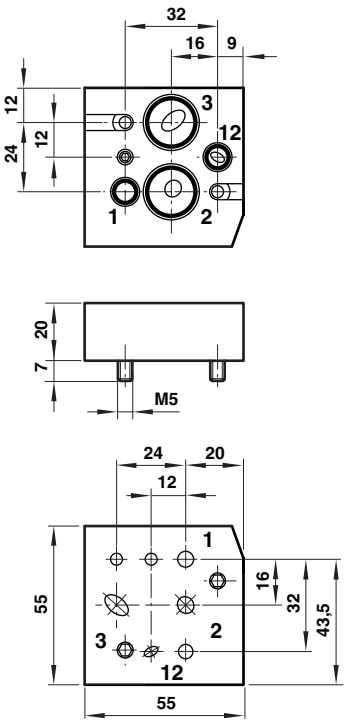

Throttle control plate

Model: 4050218

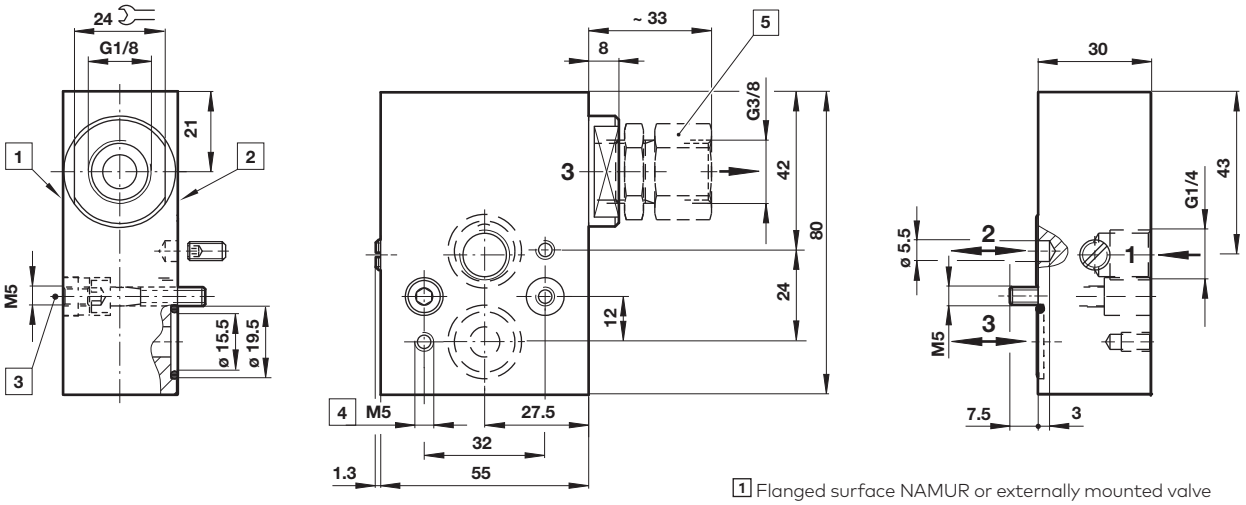

1 Flanged surface NAMUR or externally mounted valve
2 Flanged surface NAMUR actuator
3 Push-in threaded piece after plate mounting (to secure correct position)
4 8 mm deep
5 Flow regulator assembly

Our policy is one of continued research and development. We therefore reserve the right to amend, without notice, the specifications given in this document. (2004 - 5118i) © 2020 Norgren GmbH

Exhaust guard
Model: 0613422 & 0613423

Dimensions in mm
Projection/First angle

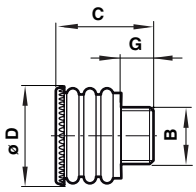

B	Suitable for	G	C	Ø D	Weight (g)	Model
1/4"	G1/4, 1/4 NPT	10	26,5	21	5	0613422
1/2"	G1/2, 1/2 NPT	12	33,5	29	11	0613423

Silencer (plastic)
Model: M/S2, M/S4, C/S2 & C/S4

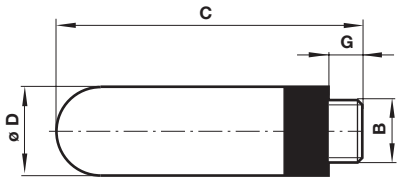

B	G	C	Ø D	Weight (g)	Model
G1/4	7	35,5	15,5	2,9	M/S2
1/4 NPT	7	35,5	15,5	2,9	C/S2
G1/2	12	67	23	11,5	M/S4
1/2 NPT	12	67	23	11,5	C/S4

Silencer (brass or stainless steel)

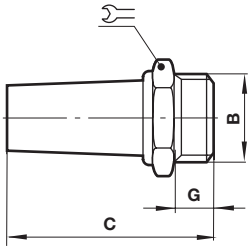

B	C	G	⌯	Weight (g)	Model
G1/4	33	8	17	18	T40C2800
1/4 NPT	35	8	9/16	18	MS002A
G1/4	36	8	16	23	0014613
1/4 NPT	36	8	16	67	0613678
G1/2	56	12	27	63	T40C4800
1/2 NPT	48	12	7/8	63	MS004A
G1/2	49	12	24	81	0014813
1/2 NPT	49	12	24	235	0613679

Warning

These products are intended for use in industrial compressed air and fluid systems only. Do not use these products where pressures and temperatures can exceed those listed under **»Technical features/dat**a«. Before using these products with fluids other than those specified, for non-industrial applications, life-support systems, or other applications not within published specifications, consult Norgren GmbH.

Through misuse, age, or malfunction, components used in fluid power systems can fail in various modes.

The system designer is warned to consider the failure modes of all component parts used in fluid power systems and to provide adequate safeguards to prevent personal injury or damage to equipment in the event of such failure. System designers must provide a warning to end users in the system instructional manual if protection against a failure mode cannot be adequately provided.
System designers and end users are cautioned to review specific warnings found in instruction sheets packed and shipped with these products.

Functional safety (SIL):

Suitable for certain applications can only be evaluated through examination of each safety-related overall system with regard to the requirements of IEC 61508/61511.

Our policy is one of continued research and development. We therefore reserve the right to amend, without notice, the specifications given in this document. (2004 - 5118i) © 2020 Norgren GmbH