Product data sheet

Specifications



Inductive proximity sensors XS, inductive sensor XS7 40x40x15, PBT, Sn15mm, 12...24 VDC, cable 5 m

XS7C1A1PAL5

Main

Range of product	Telemecanique Inductive proximity sensors XS
Series name	General purpose
Sensor type	Inductive proximity sensor
Device application	-
Sensor name	XS7
Sensor design	Flat form 40 x 40 x 15
Size	15 mm
Body type	Fixed
Detector flush mounting acceptance	Flush mountable
Material	Plastic
Enclosure material	PBT
Type of output signal	Discrete
Wiring technique	3-wire
Discrete output function	1 NO
Output circuit type	DC
Discrete output type	PNP
Electrical connection	Cable
Cable length	5 m
[Us] rated supply voltage	12...24 V DC with reverse polarity protection
Switching capacity in mA	<= 100 mA DC with overload and short-circuit protection
IP degree of protection	IP68 double insulation conforming to IEC 60529

Complementary

Detection face	Frontal
Front material	PBT
Operating zone	0…12 mm
Differential travel	1...15% of Sr
Cable composition	3 x 0.34 mm²

Disclaimer: This documentation is not intended as a substitute for and is not to be used for determining suitability or reliability of these products for specific user applications

Wire insulation material	PvR
Status LED	Output state: 1 LED (yellow)
Supply voltage limits	10…36 V DC
Switching frequency	<= 1000 Hz
Maximum voltage drop	<2 V (closed)
Current consumption	<= 10 mA no-load
Maximum delay first up	10 ms
Maximum delay response	2 ms
Maximum delay recovery	5 ms
Marking	CE
Depth	15 mm
Height	40 mm
Width	40 mm
Net weight	0.215 kg

Environment

Product certifications	C-Tick UL CSA
Ambient air temperature for operation	-25…70 °C
Ambient air temperature for storage	-40…85 °C
Vibration resistance	25 gn amplitude = +/- 2 mm (f = 10…55 Hz) conforming to IEC 60068-2-6
Shock resistance	50 gn for 11 ms conforming to IEC 60068-2-27

Packing Units

Unit Type of Package 1	PCE
Number of Units in Package 1	1
Package 1 Weight	208.0 g
Package 1 Height	6.7 cm
Package 1 width	9.7 cm
Package 1 Length	13.2 cm
Unit Type of Package 2	S02
Number of Units in Package 2	10
Package 2 Weight	2.458 kg
Package 2 Height	15.0 cm
Package 2 width	30.0 cm
Package 2 Length	40.0 cm

Offer Sustainability

Sustainable offer status	Green Premium product
REACh Regulation	REACh Declaration
EU RoHS Directive	Pro-active compliance (Product out of EU RoHS legal scope) EU RoHS Declaration
Mercury free	Yes

RoHS exemption information	Yes
Environmental Disclosure	Product Environmental Profile
California proposition 65	WARNING: This product can expose you to chemicals including: Diisononyl phthalate (DINP), which is known to the State of California to cause cancer, and Di-isodecyl phthalate (DIDP), which is known to the State of California to cause birth defects or other reproductive harm. For more information go to www.P65Warnings.ca.gov

Contractual warranty

Warranty	18 months

Dimensions

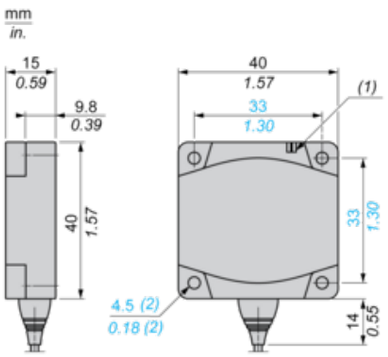

(1) LED

(2) For CHC type screws

Setting-up

Minimum Mounting Distances (mm)

Side by Side

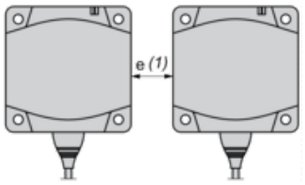

e (1) ≥ 45

Face to Face

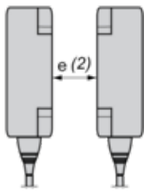

e (2) ≥ 110

Facing a Metal Object

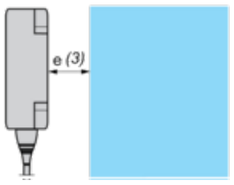

e (3) ≥ 45

Wiring Schemes

PNP

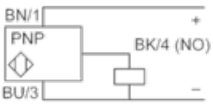

BU : Blue

BN : Brown

BK : Black