Bolt-on flush handle 120 x 62 mm

Model : 19-7-3832



Bolt in copper plated steel.

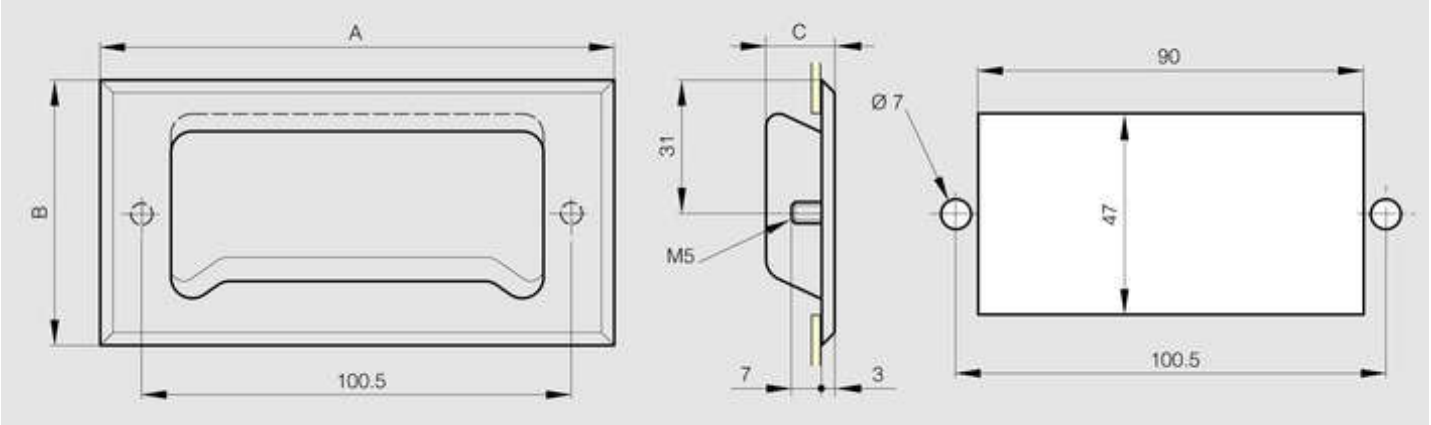

© PINET INDUSTRIE 2014

Material	304 stainless steel
Finish	satin
A (length)	120
B (width)	62
C	16
Weight (g)	60
Material	stainless steel
Handles model	flush handles
Fixing system	rear mounted

© PINET INDUSTRIE 2014