Conveyor system X300

Contents

System information 279
Chains X300 280
Chain accessories X300 280
Beam components X300 281
Beam accessories X300 282
Slide rails X300 282
Drive and idler units – introduction 284
End drive units X300, direct drive, no slip clutch 285
End drive units X300, direct drive, slip clutch 285
End drive units X300, direct drive, slip clutch, guided 286
End drive units X300, direct drive, no slip clutch, guided 286
Idlers X300 286
Plain bends X300 287
Vertical bends X300 288

System information

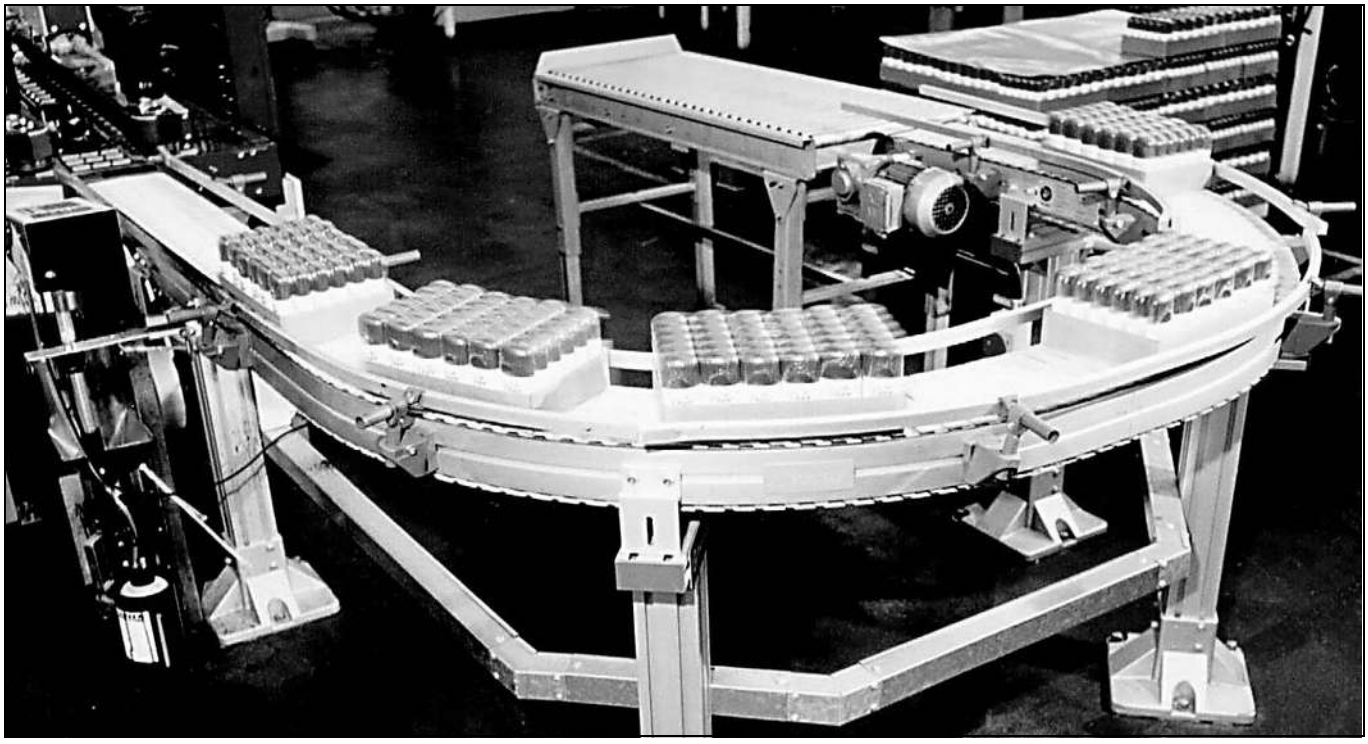

Chain X300

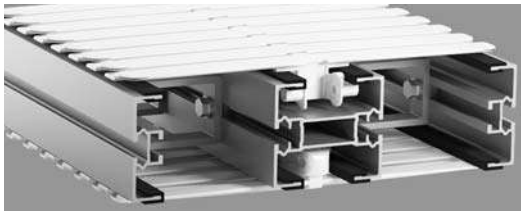

Technical characteristics

Drive unit capacity	1250 N
Chain tension limit	1250 N
Beam width	300 mm
Chain width	295 mm
Chain pitch	33,5 mm
Recommended item width	70–500 mm
Maximum item weight	15 kg
Maximum weight on conveyor	200 kg
Maximum conveyor length	30 m

Maximum permitted load per link 2,5 kg

Features

Chain travels on four slide rails. Wide track sideflexing safety chain. Compact horizontal and vertical bends. Suitable for soft packages.

Examples of application areas

Large cardboard boxes, products in soft plastic bags. Examples: detergent powder, wrapped tissue paper rolls, food products, personal care products.

Chains X300

Plain chain

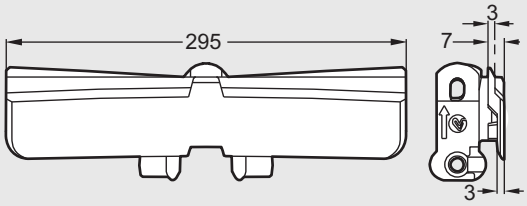

Plain chain
Length 3 m **XBTP 3A295**

Plain link kit * **5056652**

** Link kit contains 10 links, 10 pivots, 10 steel pins*

Friction top chain

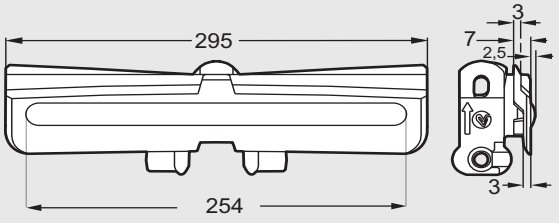

Friction top chain
Length 3 m **XBTP 3A295 F**

Friction top chain
Length 3 m **XBTP 3A295 FP**

Use the online configurator to specify and order.

Friction top link kit*
Kit with 10 links **5054874**

**Note. Links are delivered as a kit containing 10 links and the necessary steel pins and plastic pivots.*

Other chains

See the *Chain guide* for a selection of other chains.

Chain installation

See Appendix C, page 471, for installation instructions.

Chain accessories X300

Plastic pivot



Plastic pivot -X180-X300 kit **5111169**

Each kit contains 25 items.

Steel pin

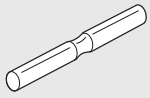

Steel pin X180-X300 kit **5111172**

Each kit contains 25 items.

Pin insertion tool for chain

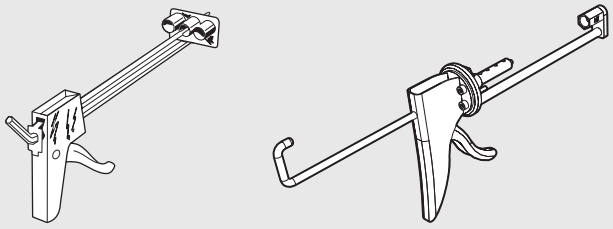

Pin insertion tool
X85--X180-X300 **XMMJ 6**
X85-X180-X300-XH, PRO version* **XBMJ 6 P**

**This tool is recommended for frequent users*

Beam section kit (300 mm version)

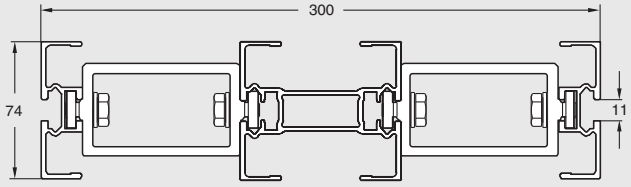

Beam section kit
Length 3 m (3000 ±5 mm) **XBCB 3A300**
Length to order (500- 3000 mm) **XBCB LA300**

The beam section is delivered unassembled.
Slide rail: see page 282

Beam (mid-section)

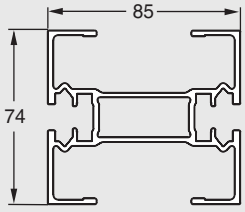

Beam (mid-section)
Length 3 m (3030 ±5 mm) **XBCB 3A85**
Length to order (500- 3000 mm) **XBCB LA85**

Beam (outer section)

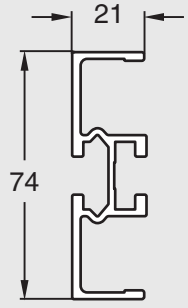

Beam (outer section)
Length 3 m (3030 ±5 mm) **XBCB 3A H**
Length to order (500- 3000 mm) **XBCB LA H**

Profile for split conveyor beam (inner section)

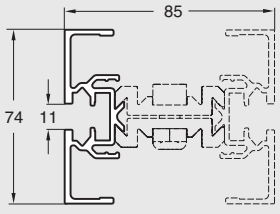

Profile for split conveyor beam
Length 3 m (3030 ±5 mm) **XBCB 3A85 H**
Length to order (500- 3000 mm) **XBCB LA85 H**

Spacer for outer beam sections

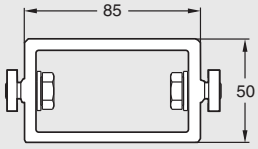

Spacer, aluminium, one pair **XBCE 85**

Including screws and nuts. For construction of 300 mm wide beam sections. Maximum distance between spacers is 0,5 m.

Beam clip assembly

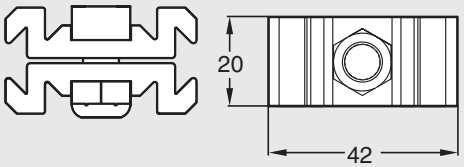

Beam clip assembly **XBCE 42×20**

Including M8 screw and locking nut. Use minimum 5 clips per meter. Place clips 100 mm from each end. Note. Must be ordered in multiples of 10.

Beam section for chain installation

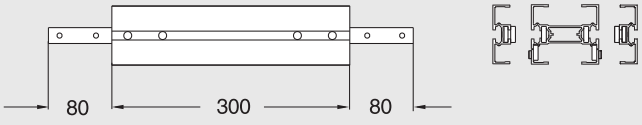

Beam section for chain installation
Including connecting strips and screws **XBCC 300A**

Beam accessories X300

Connecting strip with set screws

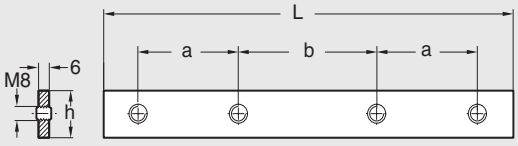

Connecting strip with set screws
h=20, a=44, b=44, L=160 **XSCJ 6×160**

Note. Must be ordered in multiples of 10

Cover strip for T-slot, PVC

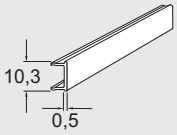

Cover strip for T-slot, grey PVC
Length 3 m **XCAC 3 P**

For XK-X180-X300

Cover strip for T-slot, aluminium

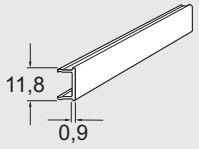

Cover strip for T-slot
Aluminium, anodized
Length 2 m **XCAC 2**

For XK-X180-X300

Slide rails X300

Plastic slide rail for X300 beam



Slide rail
Length 25 m
HDPE (Black) **XBCR 25**
PA-PE (Grey) **XBCR 25 H**
PVDF (Natural white) **XBCR 25 P**

See Appendix A, page 461 for selection guidelines and assembly instructions.

Plastic slide rail for X300 beam, outer

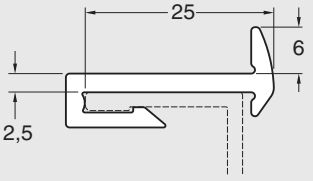

Slide rail, outer
UHMW-PE (μ=0,1–0,25) (White)
Length 3 m **XBCR 3 UA**

See Appendix A, page 461 for selection guidelines and assembly instructions.

Mounting tool for slide rail, X300

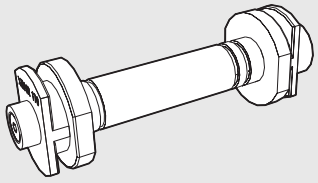

Mounting tool for slide rail **XBMR 170**

Aluminium rivets

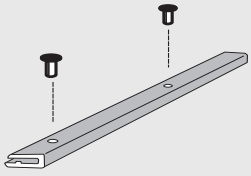

Aluminium rivets 4 mm for XK-X180-X300 conveyors, brown **XLAH 4×7**

Extra slide rail in plain bends must be anchored using plastic screws due to lack of space for the rivet crimping tool.
Note. Must be ordered in multiples of 250.

Plastic screws for slide rail

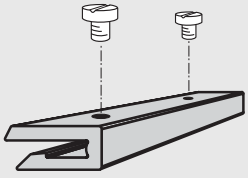

Plastic screws 5 mm for XS-X65-X85-XH-X180-X300 beams **XLAG 5**

See mounting instruction "Anchoring slide rail using plastic screws" on page 466

Note. Must be ordered in multiples of 50

Drill fixture for slide rail

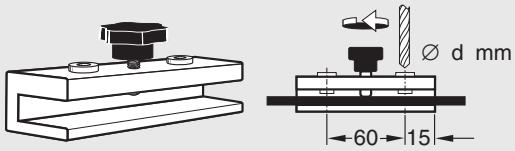

Drill fixture for X65-X85-XH-XK-X180-X300 slide rail
d=4,2 mm **3920500**

Rivet crimping pliers



Rivet crimping pliers for X65-X85-XH-XK-X180-X300
For 4 mm rivets **5051395**

Rivet crimping clamp

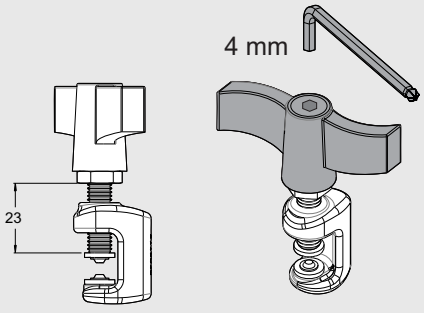

Rivet crimping clamp for X65-X85-XH-XK-X180-X300
For 4 mm rivets **3923005**

Drive unit types

The X300 system includes direct driven units with or without slip clutch.

Available motors include variable speed types (**V**) as well as fixed speed motors (**F**).

End drive units

Size	Direct drive, no slip clutch	Direct drive, slip clutch
	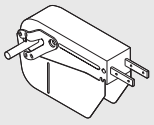	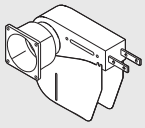
Heavy	**F, V**	**F, V**
Heavy, guided	**F, V**	**F, V**

Motor specifications

Motors are available for 230/400 V, 50 Hz and 230/460 V or 330/575 V, 60 Hz. All motors can be connected for delta or star configuration by means of jumpers.

Variable speed motors are SEW Movimot, 380–500 V. Note that variable speed motors include a control box that adds 93 mm to the width of the motor.

Ordering information

Drive units with motors must be specified using the web-based configurator. The configurator provides detailed information and step-by-step guidance in the specification process. A product code string is generated, containing the specification details. See next page for examples of code strings.

Drive units *without* motors can be ordered using the designations in the catalogue.

Dimension drawings in catalogue

Note that dimensions relating to drive unit motors depend on the motor specified during the configuration. In most cases, the motors shown in the catalogue drawings represent the largest size. If variable speed motors are used, some dimensions may increase, indicated by dimension values xxx (V: yyy). V represents the max dimension using variable speed motor.

End drive units X300, direct drive, no slip clutch

End drive unit, direct drive, no slip clutch

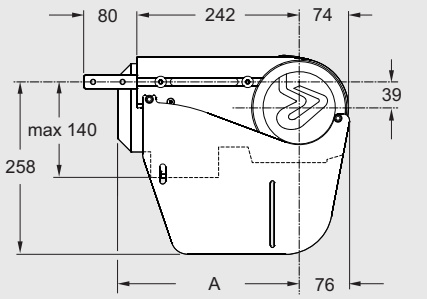

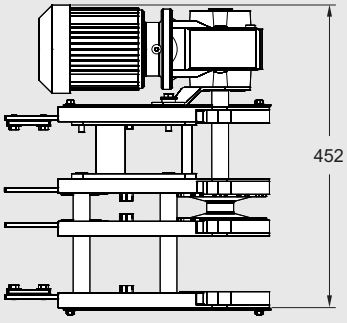

End drive unit, direct drive

Fixed speed up to 60 m/min Variable speed up to 80 m/min Motor on left side Fixed/variable speed * Without motor	**XBEB A300** **XBEB 0A300HNLP**
Motor on right side Fixed/variable speed * Without motor	**XBEB A300** **XBEB 0A300HNRP**

Maximum traction force: 1250 N. See page 23.
**Use online configurator when ordering.*
Effective track length: 0,80 m

End drive units X300, direct drive, slip clutch

End drive unit, direct drive, slip clutch

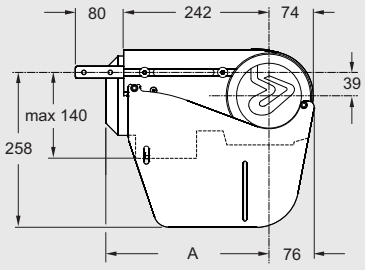

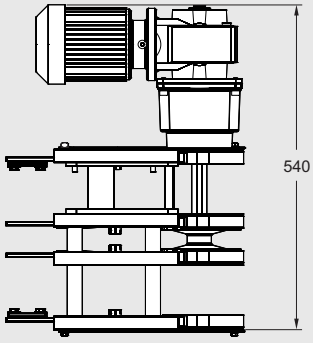

End drive unit, direct drive

Fixed speed up to 60 m/min Variable speed up to 80 m/min Motor on left side Fixed/variable speed * Without motor	**XBEB A300** **XBEB 0A300HLP**
Motor on right side Fixed/variable speed * Without motor	**XBEB A300** **XBEB 0A300HRP**

Maximum traction force: 1250 N. See page 23.
**Use online configurator when ordering.*
Effective track length: 0,80 m

End drive units X300, direct drive, slip clutch, guided

End drive unit H, guided chain, slip clutch

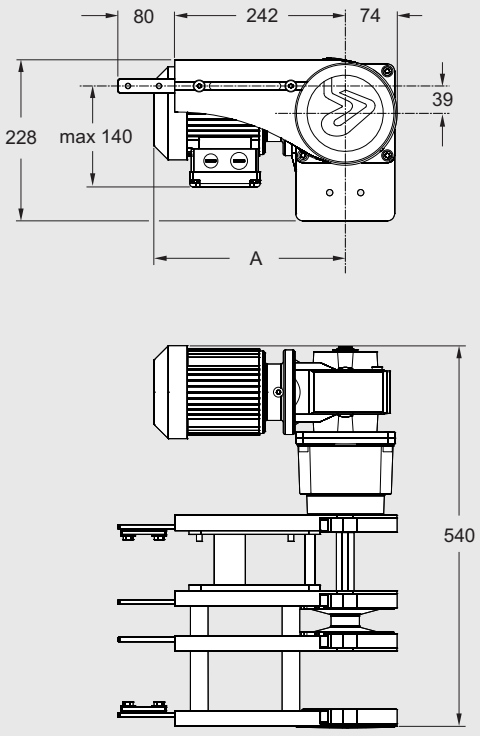

End drive unit
Direct drive with guided chain. Adjustable slip clutch.
Maximum traction force: up to 1250 N.
Fixed speeds up to 60 m/min.
Variable speed up to 80 m/min.

Motor on left side:

Fixed/variable speed *	**XBEB A300**
Without motor	**XBEB 0A300HLGP**

Motor on right side:

Fixed/variable speed *	**XBEB A180**
Without motor	**XBEB 0A300HRGP**

**Use online configurator when ordering.*

Effective track length: 0,80 m

Guide wheel kit 300

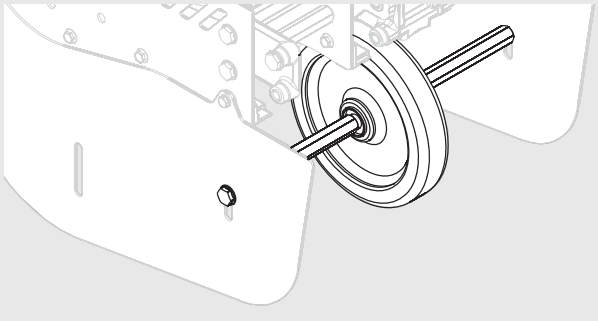

Guide wheel for drive units **5114930**

Including wheel, shaft and mounting hardware.
Note. Can only be used with plain chain. For use in high speed operation (60 m/min and above).

End drive units X300, direct drive, no slip clutch, guided

End drive unit H, guided chain, no slip clutch

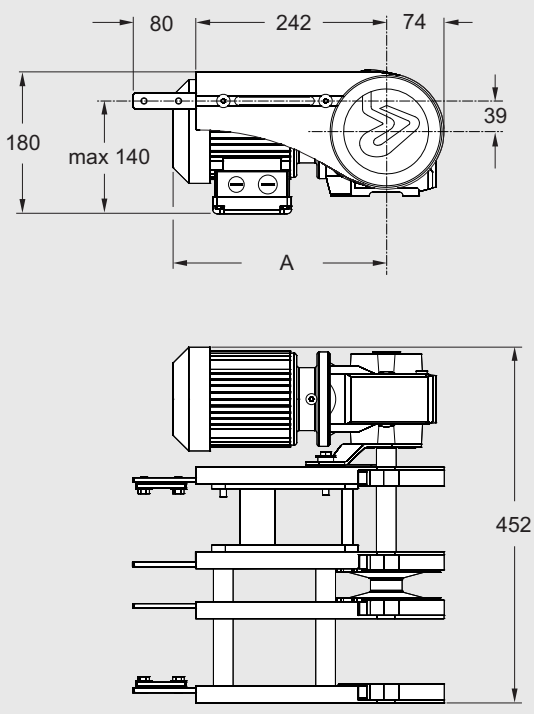

End drive unit
Direct drive with guided chain. No slip clutch.
Maximum traction force: up to 1250 N.
Fixed speeds up to 60 m/min.
Variable speed up to 80 m/min.

Motor on left side:

Fixed/variable speed *	**XBEB A300**
Without motor	**XBEB 0A300HNLGP**

Motor on right side:

Fixed/variable speed *	**XBEB A300**
Without motor	**XBEB 0A300HNRGP**

**Use online configurator when ordering.*

Effective track length: 0,80 m

Idlers X300

Idler end unit

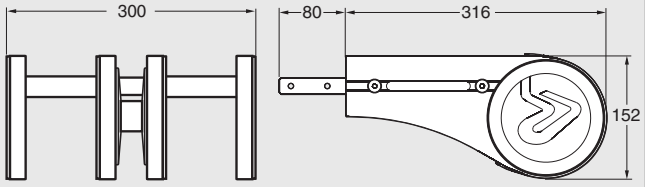

Idler end unit **XBEJ A300**

Effective track length: 0,80 m

Plain bend, 30°

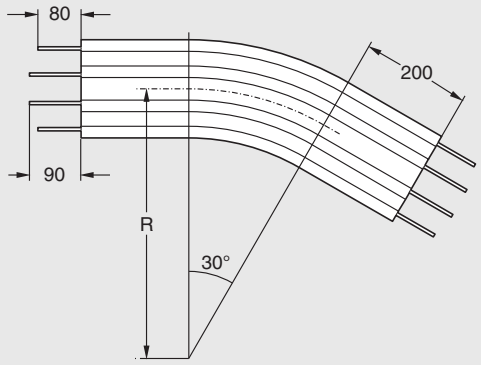

Plain bend, 30°±1°
R=700±10 mm **XBBP 30A300R7**
R=1000±10 mm **XBBP 30A300R10**

Effective track lengths:
R700: 1,55 m (top+bottom)
R1000: 1,85 m (top+bottom)

Plain bend, 60°

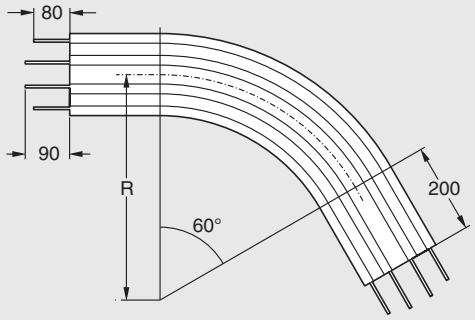

Plain bend, 60°±1°
R=700±10 mm **XBBP 60A300R7**
R=1000±10 mm **XBBP 60A300R10**

Effective track lengths:
R700: 2,30 m (top+bottom)
R1000: 2,90 m (top+bottom)

Plain bend, 45°

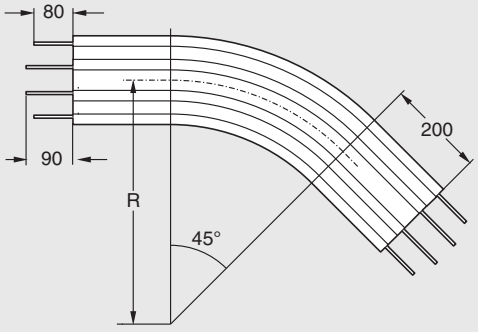

Plain bend, 45°±1°
R=700±10 mm **XBBP 45A300R7**
R=1000±10 mm **XBBP 45A300R10**

Effective track lengths:
R700: 1,90 m (top+bottom)
R1000: 2,40 m (top+bottom)

Plain bend, 90°

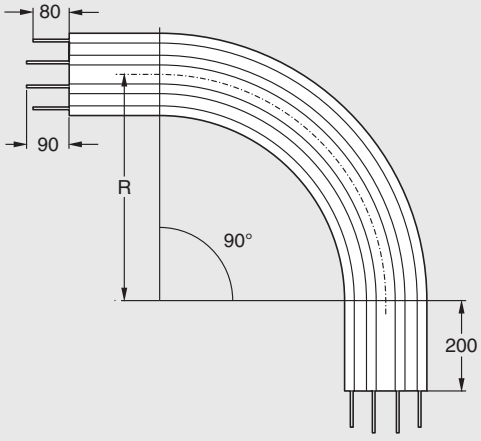

Plain bend, 90°±1°
R=700±10 mm **XBBP 90A300R7**
R=1000±10 mm **XBBP 90A300R10**

Effective track lengths:
R700: 3,00 m (top+bottom)
R1000: 3,95 m (top+bottom)

Vertical bend, 5°

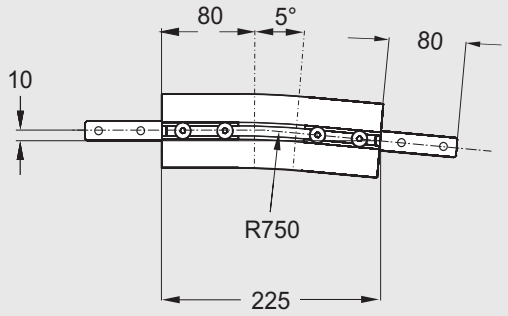

Vertical bend, 5° **XBBV 5A300R750**

Four outer section beam pieces, unassembled.
Effective track length: 0,50 m (top+bottom)

Vertical bend, 15°

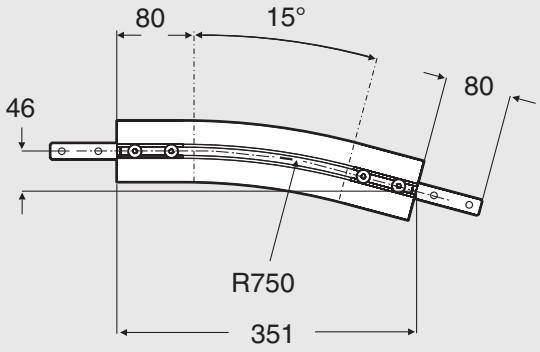

Vertical bend, 15° **XBBV 15A300R750**

Four outer section beam pieces, unassembled.
Effective track length: 0,75 m (top+bottom)

Vertical bend, 45°

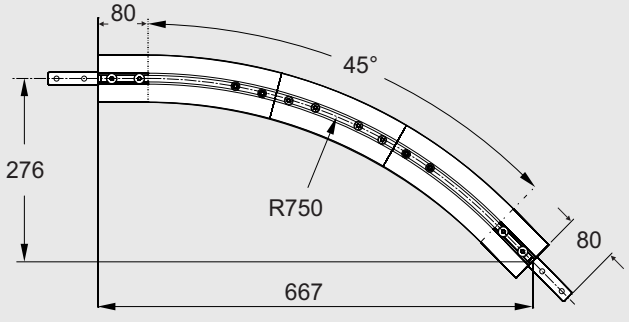

Vertical bend, 45° **XBBV 45A300R750**

Four outer section beam pieces, unassembled.
Effective track length: 1,5 m (top+bottom)