Pomona ELECTRONICS

Technical Data Sheet

Model 122505A, 122506A & Assembly Instructions
Do-It-Yourself Retractable Sheath Banana Plug

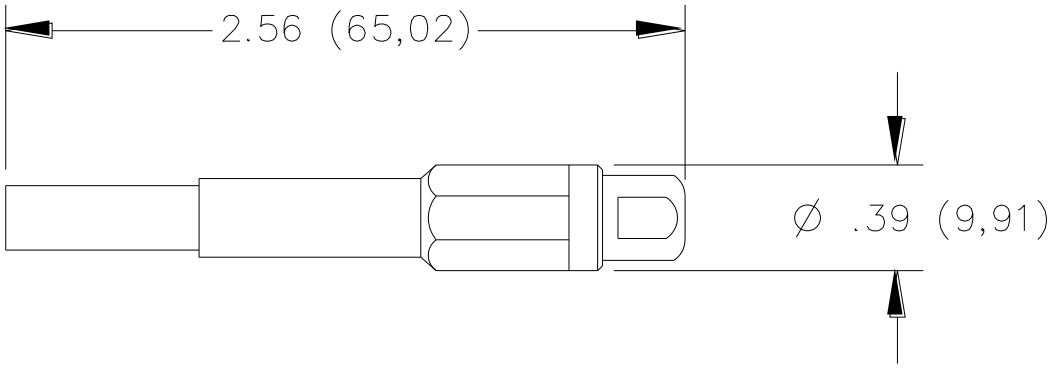



Model 122505A



Model 122506A

Features

- Models 122505A and 122506A accepts 18 to 22 AWG wire.
- Ideal for creating a special patch cord length.
- Spring loaded retractable sheath offers versatile use in sheathed and non-sheathed style of banana jacks.

Materials

Insulation: Lucel Acetal Polymer (N127)
Contact: Nickel Plated Brass & Beryllium Copper

Ratings

Voltage: CAT II 300V, CAT III 150V (when assembled properly)
Maximum voltage for *hands free use* in controlled testing environments: 1000V
Temperature: -10°C to +80°C (+14°F to +176°F)
Current: 20 A

Ordering Information

Model: 122505A (Color: Black)
Model: 122506A (Color: Red)

USA: Sales: 800-490-2361
Technical Support: technicalsupport@pomonatest.com
Fax: 425-446-5844
Europe: 31-(0) 40 2675 150 **International:** 425-446-5500
Where to Buy: www.pomonaelectronics.com

All dimensions are in inches. Tolerances (except noted): .xx = ±.02" (,51 mm), .xxx = ± .005" (,127 mm). All specifications are to the latest revisions. Specifications are subject to change without notice. Registered trademarks are the property of their respective companies.

Copyright © 2012 D1093636 Rev. 100

Model 122505A, 122506A & Assembly Instructions
Do-It-Yourself Retractable Sheath Banana Plug

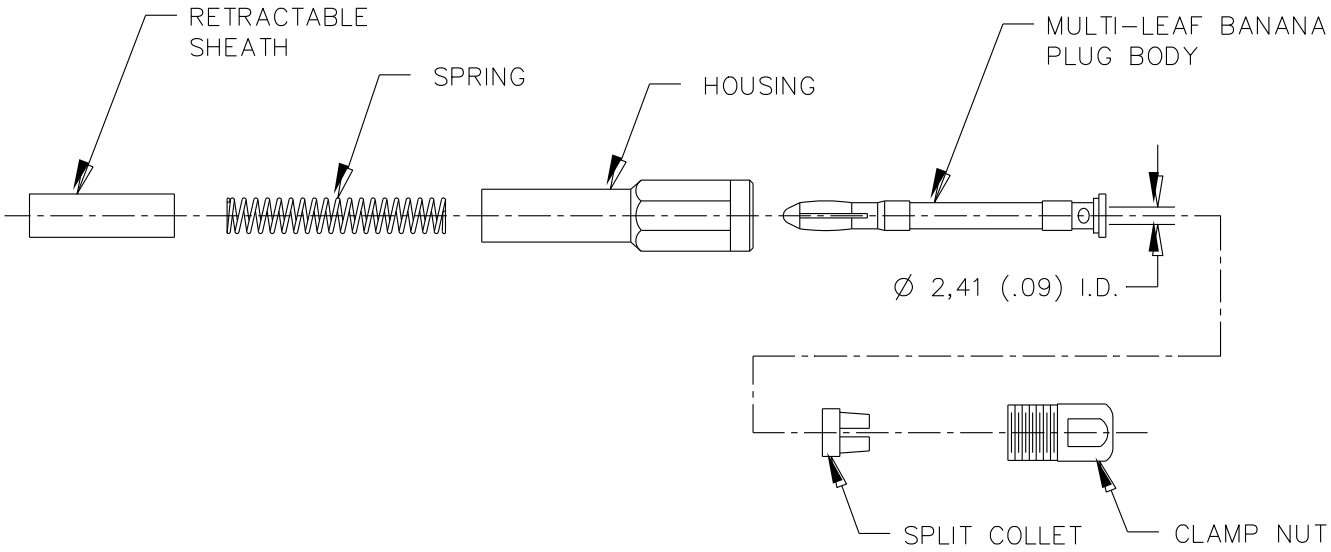

Assembly Instructions

1. Slide clamp nut and split collet over wire.
2. Solder wire to body.
3. Tighten clamp nut.
4. Slide spring over banana plug body.
5. Slide sheath over banana plug body until snap.

USA: Sales: 800-490-2361
Technical Support: technicalsupport@pomonatest.com
Fax: 425-446-5844
Europe: 31-(0) 40 2675 150 **International:** 425-446-5500
Where to Buy: www.pomonaelectronics.com

All dimensions are in inches. Tolerances (except noted): .xx = ±.02" (,51 mm), .xxx = ± .005" (,127 mm). All specifications are to the latest revisions. Specifications are subject to change without notice. Registered trademarks are the property of their respective companies.

Copyright © 2012 D1093636 Rev. 100