O5P700

Retro-reflective laser sensor

O5PLFPKG/US100

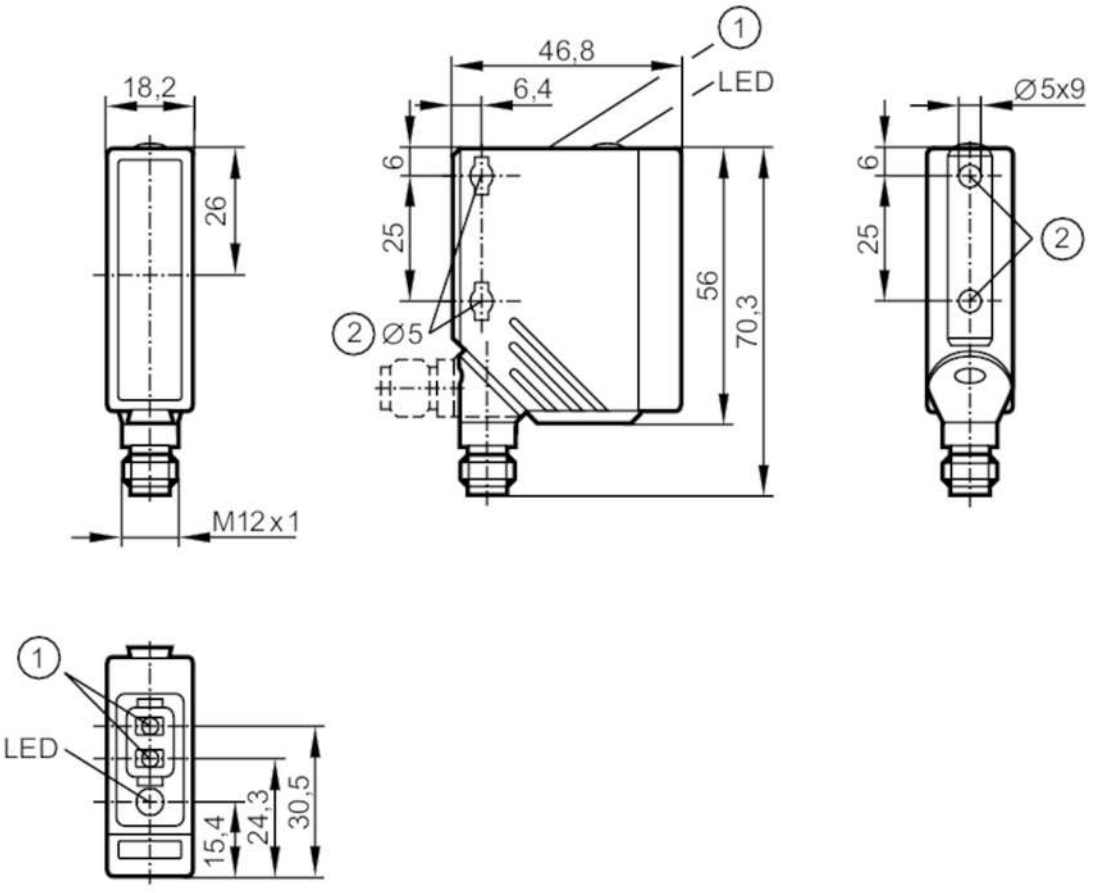

1 programming buttons
2 When a M5 mounting screw is used, the max. tightening torque is 2 Nm.

Product characteristics		
Type of light		red light
Laser protection class		1
Housing		rectangular
Application		
Special feature		polarisation filter
Function principle		Retro-reflective sensor
Electrical data		
Operating voltage	[V]	10...36 DC
Current consumption	[mA]	15
Protection class		II
Reverse polarity protection		yes
Type of light		red light
Wave length	[nm]	655
Outputs		
Electrical design		PNP
Output function		light-on/dark-on mode; (programmable)

O5P700

Retro-reflective laser sensor

O5PLFPKG/US100

Max. voltage drop switching output DC	[V]	2.5	
Permanent current rating of switching output DC	[mA]	200	
Switching frequency DC	[Hz]	2000	
Short-circuit protection		yes	
Type of short-circuit protection		pulsed	
Overload protection		yes	
Detection zone			
Range referred to prismatic reflector	[m]	15; (Prismatic reflector Ø 80 E20005)	
Range adjustable		yes	
Diameter of the smallest detectable object	[mm]	3; (1 m; 15 m: 20)	
Max. light spot diameter	[mm]	40	
Light spot dimensions refer to		at maximum range	
Polarisation filter available		yes	
Operating conditions			
Ambient temperature	[°C]	-10...60	
Protection		IP 67	
Tests / approvals			
EMC		EN 60947-5-2	
Laser protection class		1	
Notes on laser protection		Caution:	laser light
		laser class:	1
			EN / IEC60825-1:2007
			EN / IEC60825-1:2014
			Complies with 21 CFR 1040 except for deviations pursuant to Laser Notice No. 50, dated June 2007.
MTTF	[years]	602	
Mechanical data			
Weight	[g]	71	
Housing		rectangular	
Dimensions	[mm]	56 x 18.2 x 46.8	
Materials		housing: PA; bezel: stainless steel; operator interface: TPU	
Lens material		PMMA	
Lens alignment		side lens	
Displays / operating elements			
Display		switching status	1 x LED, yellow
Teach function		yes	
Electronic lock		yes	
Remarks			
Remarks		operating voltage "supply class 2" according to cULus	
Pack quantity		1 pcs.	

O5P700

Retro-reflective laser sensor

O5PLFPKG/US100

Electrical connection

Connector: 1 x M12; coding: A



Connection

