E38825

Thermowell for temperature sensors

THERMOWELL, D3/1-1,5"CLAMP/EL=50

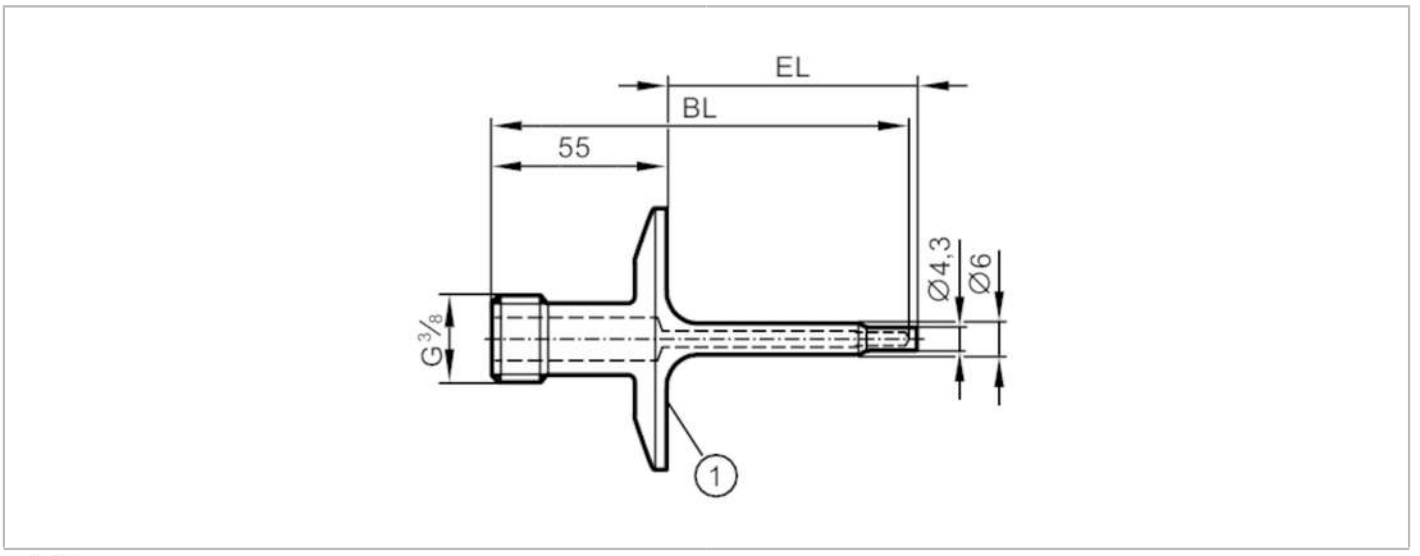

EC 1935/2004 FDA

Application		
Design		for temperature sensors EL = 83 mm
Pressure rating	[bar]	25
Mechanical data		
Weight	[g]	108.4
Materials		stainless steel (1.4435 / 316L)
Sensor connection		G 3/8 internal thread Ø 3 mm
Process connection		Clamp DN25...DN40 (1...1,5") DIN 32676 (ISO 2852)
Surface characteristics Ra/Rz of the wetted parts		< 0.4 / -
Installation length EL	[mm]	50
Bore length BL	[mm]	83
Remarks		
Pack quantity		1 pcs.