WIRING DIAGRAMS

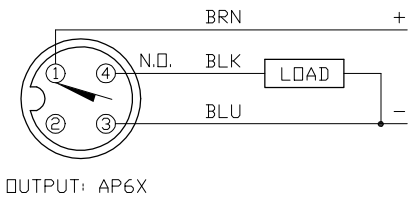

OUTPUT: AP6X

SHORT-CIRCUIT AND OVERLOAD PROTECTED

LOCKNUT LN-P18

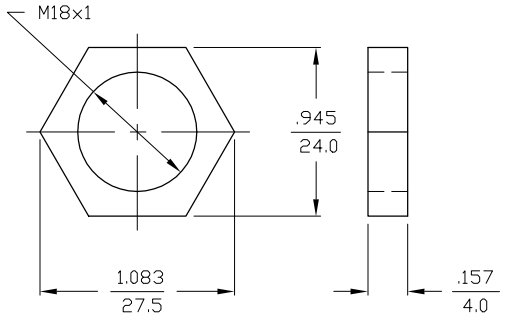

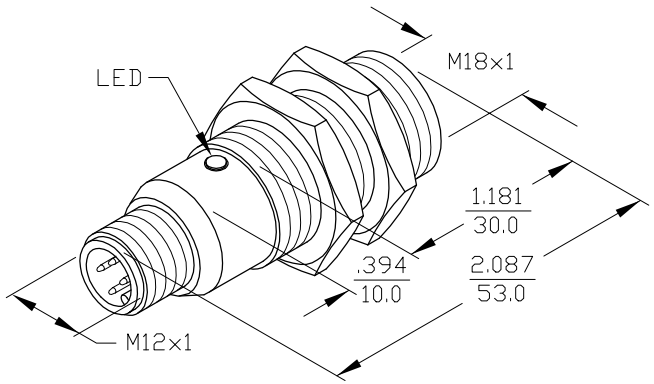

SPECIFICATIONS

OPERATING VOLTAGE	10-30 VDC
RIPPLE	≤10%
HYSTERESIS (DIFFERENTIAL TRAVEL)	3-15% (5% TYPICAL)
VOLTAGE DROP ACROSS CONDUCTING SENSOR	≤1.8 V at 200 mA
OUTPUT FUNCTION	NORMALLY OPEN 3-WIRE DC SELF-CONTAINED
TTL COMPATIBLE	NO
SHORT-CIRCUIT PROTECTED	YES
TRIGGER CURRENT FOR OVERLOAD PROTECTION	≥220 mA
CONTINUOUS LOAD CURRENT	≤200 mA
LEAKAGE (OFF-STATE) CURRENT	<10 μA
NO-LOAD CURRENT	5.5-9.5 mA
TIME DELAY BEFORE AVAILABILITY	≤8 ms
POWER-ON EFFECT PROTECTION	INCORPORATED
POLARITY INVERSION PROTECTION	INCORPORATED
WIRE-BREAK PROTECTION	INCORPORATED
PROTECTION AGAINST TRANSIENTS	2 kV, 1 ms, 1 kΩ
OPERATING TEMPERATURE	-25°C to +70°C (-13°F to +158°F)
ENCLOSURE	MEETS NEMA 1, 3, 4, 6, 13 AND IEC IP67
SHOCK	30 g, 11 ms
VIBRATION	55 Hz, 1 mm AMPLITUDE (IN ALL 3 PLANES)
LED FUNCTION	RED: OUTPUT ENERGIZED
SENSING RANGE	8 mm = .315" (NOMINAL)
SWITCHING FREQUENCY	1000 Hz
REPEATABILITY	≤2% of NOMINAL SENSING RANGE
SHIELDED	NO

REV	DESCRIPTION	DRFT	DATE	CHKD
A	SEE REVISION DOCUMENT CP-NS18	RJP	9/18/92	

REVISIONS

MATERIAL PA 12-GF30
PLASTIC BARREL

FINISH

3RD ANGLE PROJECTION

TURCK INC
3000 CAMPUS DRIVE
MINNEAPOLIS, MN 55441
PHONE: (612) 553-9224

DRWN GMB DATE 5/9/89

CHKD DATE

TMI

DIMENSIONS ARE IN INCHES / mm

PART NO. Ni8-S18-AP6X-H1141

SIZE B | ID NO. 4652600 | REV A

SCALE NONE | BPQD-D\4652600 | SHEET OF

This Document Was Officially Certified By TURCK Inc. On 1/28/2003 5:43:21 PM