PRODUCT DATASHEET
FL 250 P 167W 25KLM 865 PS SY100 BK

FLOODLIGHT 250 | Versatile floodlight with up to 25000 lm light output



Areas of application

- Replacement for floodlights with halogen lamps
- Outdoor use (IP66)
- D-sign according to EN 60598-2-24 for fire-risk commercial unit, e.g. by accumulation of dust
- Public areas
- Building facades
- Construction areas
- Parking

Product benefits

- Breather membrane to optimize air exchange, without compromising IP protection
- Highly versatile due to selectable lumen steps (Multi Lumen) on the housing
- Robust cable gland with integrated waterstop function
- Safe and very uniform illumination, due to frosted and tempered glass diffuser
- Bright, robust and durable
- Energy savings of up to 90 % compared to halogen lamp floodlights
- No upper light output ratio (ULOR 0%) when mounted at 0° tilt

Product features

- High luminous efficacy: up to 150 lm/W
- Type of protection: IP66
- Pre-installed, flexible 1 m cable (H05RN-F), wrapped 3 x 1.0 mm^2 single wires
- Reflector-based, symmetric light distribution with 100° x 100° beam angle
- Mounting bracket with 30° angle and wide rotation area

© 2026, LEDVANCE GmbH. All rights reserved.

TECHNICAL DATA

Electrical data

Nominal wattage	167 W / 150 W
Nominal voltage	220…240 V
Mains frequency	50…60 Hz
Nominal current	741/665 mA
Inrush current	33.8 A
Inrush current time T_{h50}	560 µs
Max. number of luminaires per miniature circuit breaker B16	4
Max. number of luminaires per miniature circuit breaker C10	4
Max. number of luminaires per miniature circuit breaker C16	7
Power factor λ	> 0.90
Total harmonic distortion	< 20 %
Protection class	I
Surge capability (L-N)	4 kV
Surge capability (L/N-Ground)	6 kV
Operating mode	Integrated LED driver

Photometrical data

Luminous flux	25000 lm / 22500 lm
Luminous efficacy	150 lm/W
Color temperature	6500 K
Light color (designation)	Cool Daylight
Color rendering index Ra	80
Standard deviation of color matching	5 sdcm
Stroboscope effect metric (SVM)	≤0.9
Photobiological safety group acc. to EN62778	RG1
Photobiological safety group acc. to EN62471	RG1
Beam angle	100 ° x 100 °

© 2026, LEDVANCE GmbH. All rights reserved.

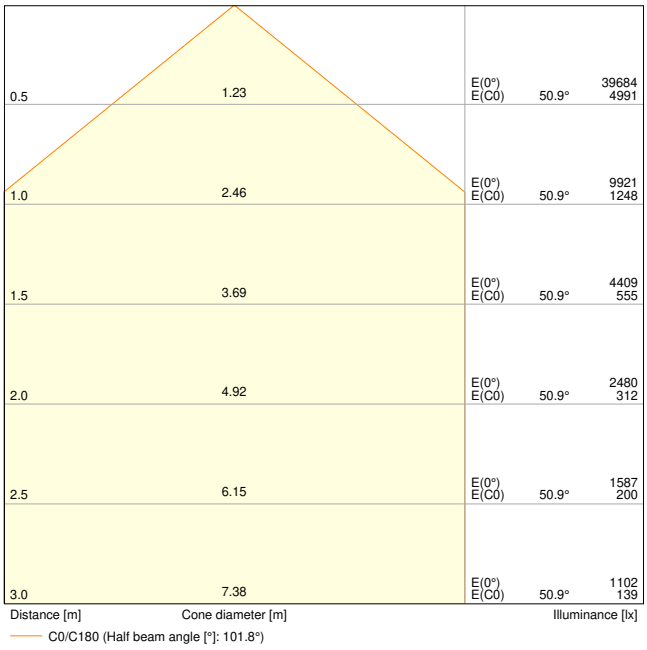

FL 250 P 167W 25KLM 865 PS SY100 BK

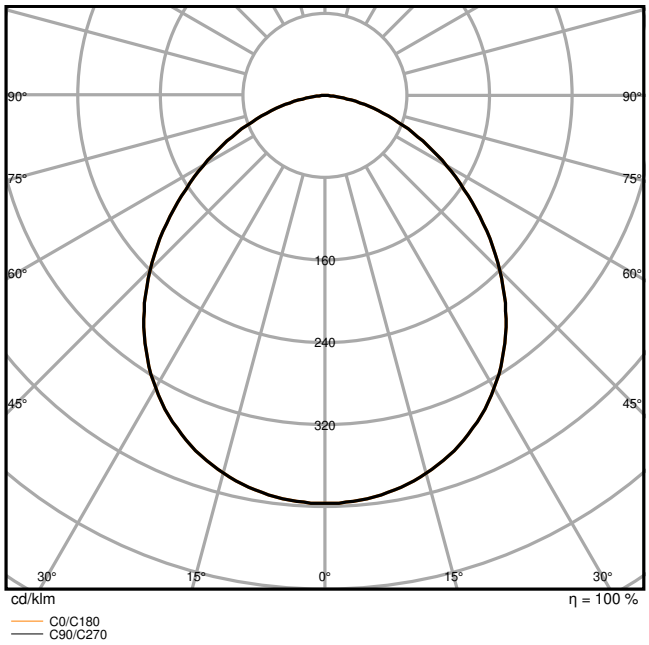

FL 250 P 167W 25KLM 865 PS SY100 BK

Adjustable attributes

Nominal wattage	Color temperature	Luminous flux	Luminous efficacy
167 W	6500 K	25000 lm	150 lm/W
150 W	6500 K	22500 lm	150 lm/W

Dimensions & Weight

Length	329.00 mm
Width	61.00 mm
Height	409.00 mm
Product weight	4420.00 g
Cable length	1000 mm

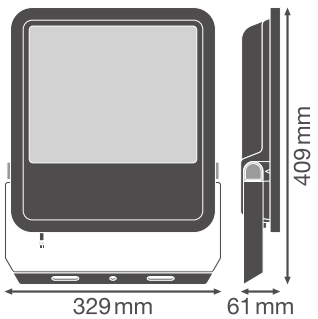

FL 250P SY100

© 2026, LEDVANCE GmbH. All rights reserved.

Materials & Colors

Product color	Black
Housing color	Black
RAL Color (most similar)	RAL 9017
Body material	Aluminum
Cover material	Glass
Light emitting surface material	Glass
Glow Wire Test according to IEC 60695-2-12	650 °C
Mercury content	0.0 mg

Application & Mounting

Ambient temperature range	-30…+50 °C
Temperature range at storage	-40…+70 °C
Type of connection	Cable, 3-pole
Type of protection	IP66
Protection class IK (shock resistance)	IK08
Corrosion resistance class acc. to EN 12944	C4
Dimmable	No
Mounting type	Surface
Mounting location	Wall / Pole / Floor / Ceiling
Application environment	Outdoor
Mechanically adjustable	Yes
With light source	Yes
Replaceable light source	No

Lifespan

Lifespan L70/B50 at 25 °C	100000 h [1)]
Lifespan L80/B10 at 25 °C	75000 h [1)]
Lifespan L80/B50 at 25 °C	70000 h
Lifespan L90/B10 at 25 °C	35000 h

1) t[h]: L70 / B50 @ 25 °C (Ta), t[h]: L80 / B10 @ 25 °C (Ta), t[h]: L90 / B10 @ 25 °C (Ta)

Control gear

Output current	790 mA
ECG - Output ripple current	< 20 %

Certificates & Standards

Standards	CE / CB / ENEC / EAC / UKCA / EPD

© 2026, LEDVANCE GmbH. All rights reserved.

Luminaire with limited surface temperature, "D sign"	Yes
Ball shot safe	No
EPD	LEDV-00030-V01.01-EN
Replaceable light source (EPREL)	Not replaceable

Additional product data

Added function	MULTI SELECT

Accessories Optional

Product image	Product name	EAN
	FL TRAVERSE 1/2 42/60/76MM	4099854680038

Safety advice

– Max. wind load surface 0.105 m^2

DOWNLOAD DATA

	Documents and certificates	Document name
PDF	User instruction / safety instructions	G11193710_UI_Floodlight_65W-200W
PDF	Legal information	Insert_LSI_Floodlight_69W-167W_G11195968
PDF	Legal information	Informationstext 18 Abs 4 ElektroG
PDF	Legal information	Safety Insert G11205496
PDF	Legal information	Legal Insert G11277401
PDF	Declarations of conformity	FLOODLIGHT GEN4
PDF	Declarations of conformity UKCA	FLOODLIGHT GEN4
PDF	EPD	EPD EN FLOODLIGHT GEN 4 MP PHOTOCELL

	Photometric and lighting design files	Document name
IES	IES file (IES)	FL 250 P 167W 25KLM 865 PS SY100 BK

© 2026, LEDVANCE GmbH. All rights reserved.

	Photometric and lighting design files	Document name
	LDT file (Eulumdat)	FL 250 P 167W 25KLM 865 PS SY100 BK
	ULD file (DIALux)	FL 250 P 167W 25KLM 865 PS SY100BK
	ROLF file (RELUX)	FL 250 P 167W 25KLM 865 PS SY100BK
	UGR file (UGR table)	FL 250 P 167W 25KLM 865 PS SY100 BK
	Light distribution curve type cone	FL 250 P 167W 25KLM 865 PS SY100 BK
	Light distribution curve type polar	FL 250 P 167W 25KLM 865 PS SY100 BK

	CAD/BIM files	Document name
	BIM Revit 3D	Floodlight G4
	CAD STEP 3D	FL G4 167W.

	Tender texts	Document name
	Tender documents	FLOODLIGHT 250 167W 25KLM 865 PS SY100 BK-EN

LOGISTICAL DATA

Product code	Packaging unit (Pieces/Unit)	Dimensions (length x width x height)	Gross weight	Volume
4099854306648	Folding box 1	78 mm x 354 mm x 454 mm	4766.00 g	12.54 dm^3
4099854306655	Shipping box 2	370 mm x 173 mm x 481 mm	10102.00 g	30.79 dm^3

The mentioned product code describes the smallest quantity unit which can be ordered. One shipping unit can contain one or more single products. When placing an order, for the quantity please enter single or multiples of a shipping unit.

ADDITIONAL CATALOG INFORMATION

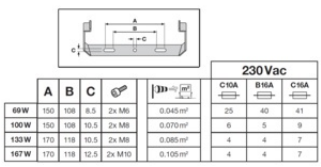

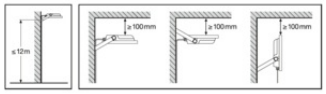

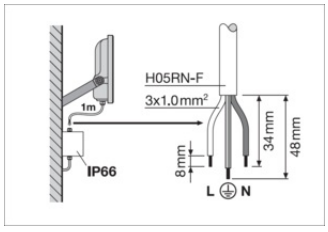

© 2026, LEDVANCE GmbH. All rights reserved.



FL 100 P 69W 10KLM 830 PS SY100	53W / 7320lm	69W / 9150lm
FL 100 P 69W 10KLM 840 PS SY100	53W / 8000lm	69W / 10000lm
FL 100 P 69W 10KLM 865 PS SY100	53W / 8000lm	69W / 10000lm
FL 150 P 100W 15KLM 830 PS SY100	83W / 11670lm	100W / 14000lm
FL 150 P 100W 15KLM 840 PS SY100	83W / 12500lm	100W / 15000lm
FL 150 P 100W 15KLM 865 PS SY100	83W / 12500lm	100W / 15000lm
FL 200 P 133W 20KLM 830 PS SY100	117W / 16275lm	133W / 18600lm
FL 200 P 133W 20KLM 840 PS SY100	117W / 17500lm	133W / 20000lm
FL 200 P 133W 20KLM 865 PS SY100	117W / 17500lm	133W / 20000lm
FL 250 P 167W 25KLM 830 PS SY100	150W / 21060lm	167W / 23400lm
FL 250 P 167W 25KLM 840 PS SY100	150W / 22500lm	167W / 25000lm
FL 250 P 167W 25KLM 865 PS SY100	150W / 22500lm	167W / 25000lm

References / Links

– For Guarantee see www.ledvance.com/guarantee

DISCLAIMER

Subject to change without notice. Errors and omission excepted. Always make sure to use the most recent release.

© 2026, LEDVANCE GmbH. All rights reserved.