MURR ELEKTRONIK
stay connected

CUBE67 I/O EXTENSION MODULE

8 digital inputs

Expansion module
DI8 PNP (E) - 8× M8
Connection cables are in the online shop under "Connection Technology".
Housing fully potted.

Link to Product

Illustration



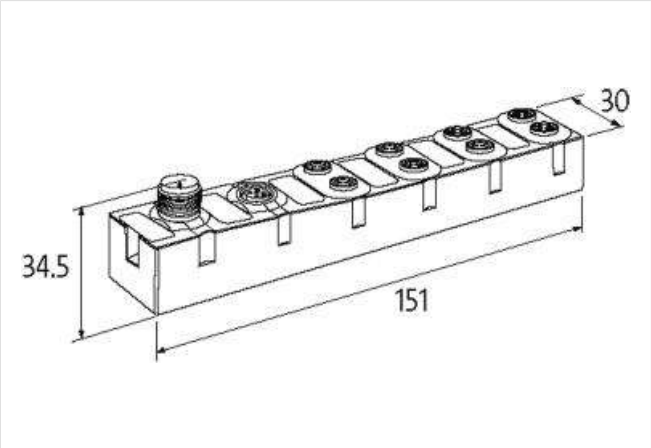

Product may differ from Image

Commercial data

ECLASS-6.0	27242604
ECLASS-6.1	27242604
ECLASS-7.0	27242604
ECLASS-8.0	27242604
ECLASS-9.0	27242604
ECLASS-10.1	27242604
ECLASS-11.1	27242604
ECLASS-12.0	27242604
ETIM-5.0	EC001599
customs tariff number	85389099
GTIN	4048879048460
Packaging unit	1

Electrical data | Supply

Norm operating voltage	EN 61131-2
Operating voltage US DC	24 V
Current consumption max.	30 mA
Total current UA max.	4 A
Total current US max.	4 A

Electrical data | Input

Overload resistant	yes

The information in this Product-PDF has been compiled with the utmost care.
Liability for the correctness completeness and topicality of the information is restricted to gross negligence. Version: 2024-01-31

Short-circuit protected	yes
Type input	PNP, for 3-wire sensors or mechanical switches
Input filter time	1 ms
Sensor current US per input max.	0,2 A
Diagnostics	
Diagnostic	No voltage, Under voltage
Diagnostic via BUS	per module and channel
Diagnostic via LED	per module and channel
Short circuit diagnosis	yes
LED display	Ethernet connection/data traffic
Overload diagnosis	yes
Device protection | Electrical	
Degree of protection (EN IEC 60529)	IP67
Mechanical data | Mounting data	
Suitable for mounting type	2-hole screw mounting
Height	151 mm
Width	30 mm
Depth	34,5 mm
Environmental characteristics | Climatic	
Operating temperature min.	0 °C
Operating temperature max.	55 °C
Storage temperature min.	-20 °C
Storage temperature max.	75 °C
Connection type 3	
Connection type 1	Bus In
Connection type 2	Bus Out
Connection type 3	R
Family construction form	M12
Gender	male
Color contact carrier	black
Coding	A
No. of poles	6
PIN 1	24 V DC (UA)
PIN 2	24 V DC (US)
PIN 3	0 V
PIN 4	Bus internal
PIN 5	Bus internal
PIN 6	0 V
Family construction form	M12
Gender	female
Color contact carrier	black
Coding	A
No. of poles	6
PIN 1	24 V DC (UA)
PIN 2	24 V DC (US)
PIN 3	0 V
PIN 4	Bus internal
PIN 5	Bus internal
PIN 6	0 V
Family construction form	M8
Gender	female
Color contact carrier	black

The information in this Product-PDF has been compiled with the utmost care.
Liability for the correctness completeness and topicality of the information is restricted to gross negligence. Version: 2024-01-31

Coding	A
No. of poles	3
PIN 1	24 V DC (US)
PIN 3	0 V
PIN 4	DI

The information in this Product-PDF has been compiled with the utmost care.
Liability for the correctness completeness and topicality of the information is restricted to gross negligence. Version: 2024-01-31