efector160

E43202

FLANGE PLATE 65-80/G3/4

Accessories

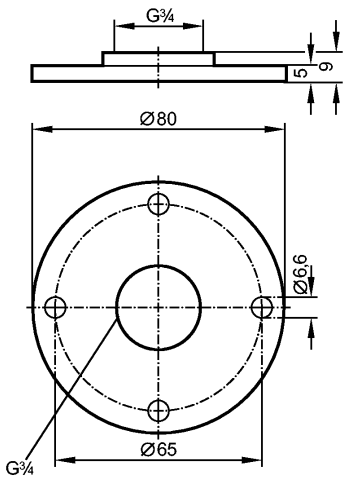

Made in Germany

Product characteristics		
65-80 / G ¾		
Flange plate		
Environment		
Maximum vessel pressure	[bar]	-1...4 (depending on the used seal)
Mechanical data		
Design		for level sensors LR
Housing materials		flange: stainless steel (303S22)
Weight	[kg]	0.199
Remarks		
Pack quantity	[piece]	1
Other data		
Recommended tightening torque	[Nm]	6...9