BFK9400A048

CONTACTOR FOR POWER FACTOR CORRECTION WITH AC CONTROL CIRCUIT, INCLUDING LIMITING RESISTORS, MAXIMUM IEC OPERATIONAL POWER 400V = 60KVAR, COIL 48VAC 50/60HZ



Product designation			Power contactor
Product type designation			BFK94
Contact characteristics			
Number of poles		Nr.	3
Rated insulation voltage Ui IEC/EN		V	690
Rated impulse withstand voltage Uimp		kV	8
Operational frequency			
	min	Hz	25
	max	Hz	400
IEC Conventional free air thermal current Ith		A	115
Rated operational power AC-6b (T≤40°C)			
	230V	kvar	34
	400V	kvar	60
	440…480V	kvar	75
	690V	kvar	80
Short-time allowable current for 10s (IEC/EN60947-1)		A	640
Protection fuse			
	gG (IEC)	A	125
Making capacity (RMS value)		A	950
Breaking capacity at voltage			
	440V	A	760
	500V	A	660
	690V	A	475
Resistance per pole (average value)		mΩ	0.6
Power dissipation per pole (average value)			
	Ith	W	7.9
Tightening torque for terminals			
	min	Nm	4
	max	Nm	5
	min	Ibin	2.95
	max	Ibin	3.69
Tightening torque for coil terminal			
	min	Nm	0.8
	max	Nm	1
	min	Ibin	0.8
	max	Ibin	0.74
Max number of wires simultaneously connectable		Nr.	2
Conductor section			
AWG/Kcmil			
	max		2
Flexible w/o lug conductor section			
	min	mm²	1.5
	max	mm²	35
Flexible c/w lug conductor section			
	min	mm²	1.5

The characteristics described in this document are subject to updates or modifications at any time. The descriptions, technical and functional information, illustrations and instructions in this brochure are purely illustrative, and are consequently not contractually binding

	max	mm²	35
Power terminal protection according to IEC/EN 60529			IP20 front
Mechanical features			
Operating position			
	normal		Vertical plan
	allowable		±30°
Fixing			Screw / DIN rail 35mm
Weight		g	1090
Conductor section			
AWG/kcmil conductor section			
	max		2
Operations			
Mechanical life		cycles	15000000
Electrical life		cycles	400000
Safety related data			
Performance level B10d according to EN/ISO 13489-1			
	rated load	cycles	400000
	mechanical load	cycles	15000000
EMC compatibility			yes
AC coil operating			
Rated AC voltage at 50/60Hz		V	48
AC operating voltage			
of 50/60Hz coil powered at 50Hz			
pick-up			
	min	%Us	80
	max	%Us	110
drop-out			
	min	%Us	20
	max	%Us	55
of 50/60Hz coil powered at 60Hz			
pick-up			
	min	%Us	85
	max	%Us	110
drop-out			
	min	%Us	20
	max	%Us	55
AC average coil consumption at 20°C			
of 50/60Hz coil powered at 50Hz			
	in-rush	VA	210
	holding	VA	15
of 50/60Hz coil powered at 60Hz			
	in-rush	VA	195
	holding	VA	13
of 60Hz coil powered at 60Hz			
	in-rush	VA	210
	holding	VA	15
Dissipation at holding ≤20°C 50Hz		W	5
Max cycles frequency			
Mechanical operation		cycles/h	3600
Operating times			
Average time for Us control			
in AC			
Closing NO			

The characteristics described in this document are subject to updates or modifications at any time. The descriptions, technical and functional information, illustrations and instructions in this brochure are purely illustrative, and are consequently not contractually binding

			min	ms	12
			max	ms	28
		Opening NO			
			min	ms	8
			max	ms	22
	in DC				
		Closing NO			
			min	ms	40
			max	ms	85
		Opening NO			
			min	ms	20
			max	ms	55
UL technical data					
General USE					
	Contactor				
			AC current	A	115
Ambient conditions					
Temperature					
	Operating temperature				
			min	°C	-50
			max	°C	70
	Storage temperature				
			min	°C	-60
			max	°C	80
Max altitude				m	3000
Resistance & Protection					
Pollution degree					3
Dimensions					

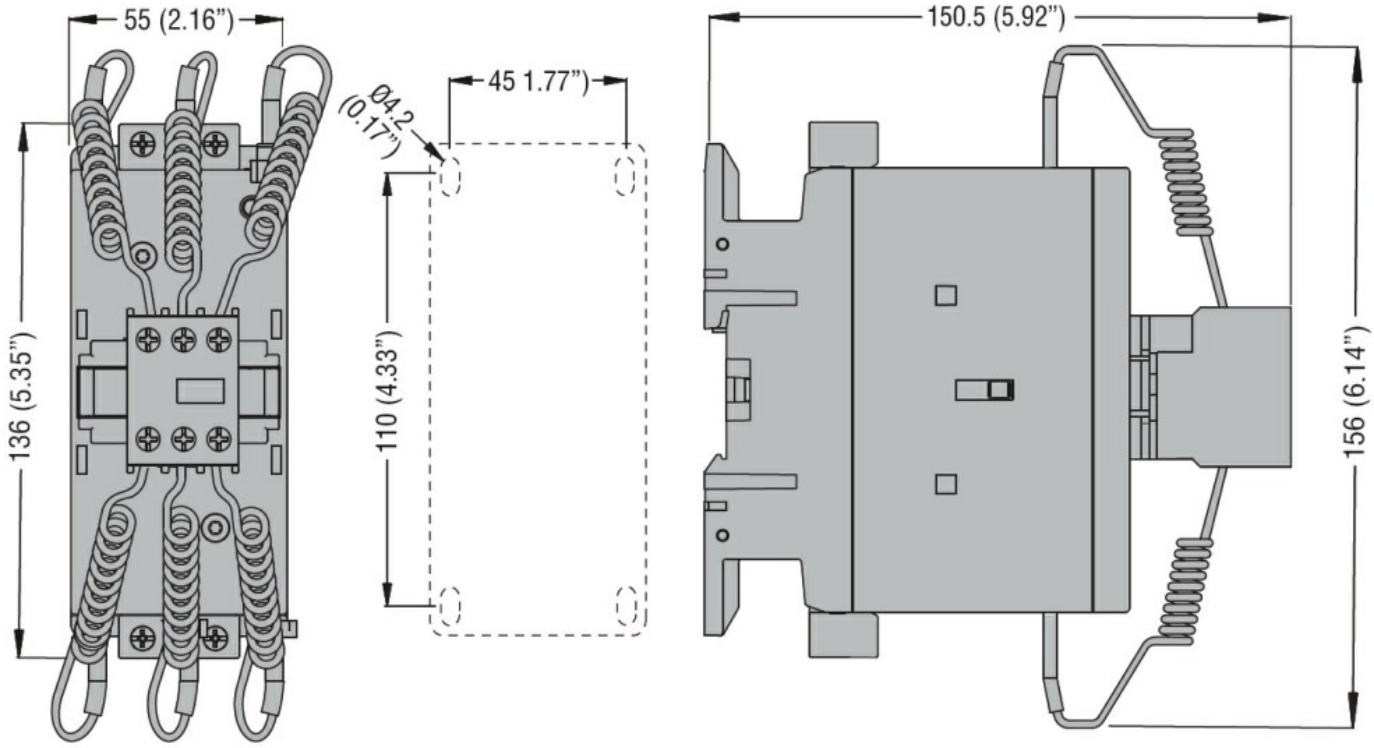

Wiring diagrams

The characteristics described in this document are subject to updates or modifications at any time. The descriptions, technical and functional information, illustrations and instructions in this brochure are purely illustrative, and are consequently not contractually binding

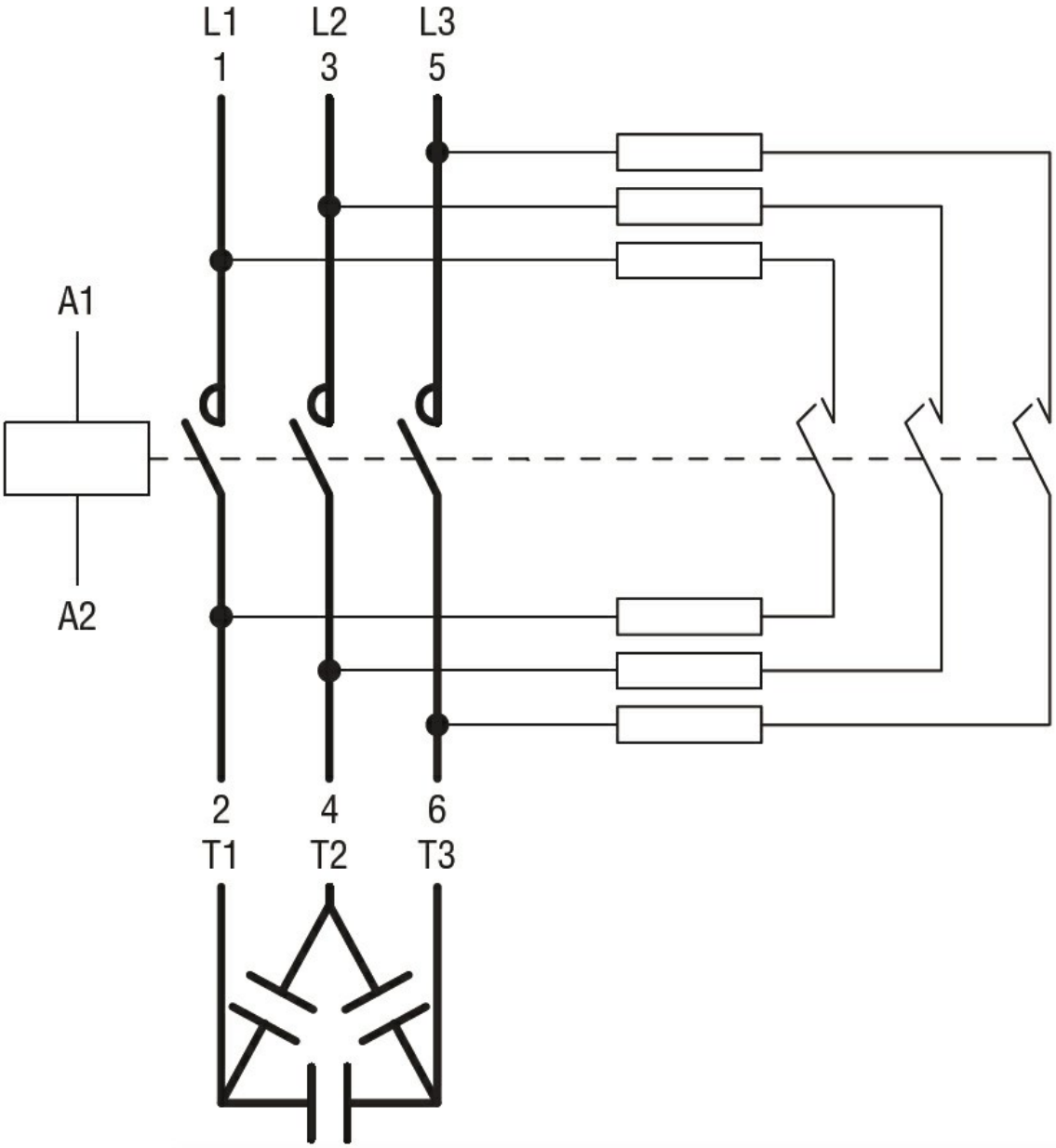

Certifications and compliance

Compliance

CSA C22.2 n° 60947-1
CSA C22.2 n° 60947-4-1
IEC/EN/BS 60947-1
IEC/EN/BS 60947-4-1
UL 60947-1
UL 60947-4-1

ETIM classification

ETIM 8.0	EC001079 - Capacitor contactor

The characteristics described in this document are subject to updates or modifications at any time. The descriptions, technical and functional information, illustrations and instructions in this brochure are purely illustrative, and are consequently not contractually binding