MURR ELEKTRONIK
stay connected

MSUD valve plug CI-9.4mm with cable

PUR 3x0.75 bk UL/CSA+drag ch. 5m

MSUD
Form CI (9.4 mm)
24 V AC/DC ±25%
LED
Further cable lengths on request.
Plastic housings with good resistance against chemicals and oils.
The resistance to aggressive media should be individually tested for your application. Further details on request.

Link to Product

Illustration



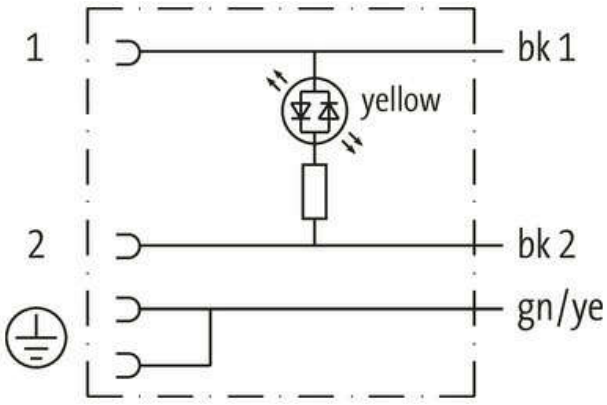

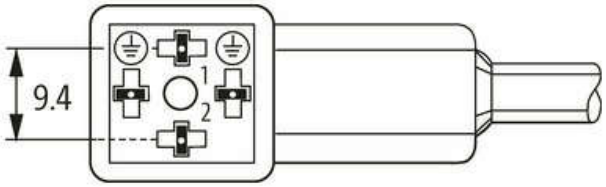

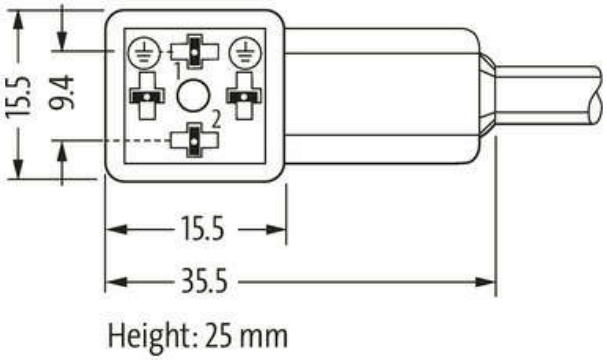

Product may differ from Image

* only for products with UL/CSA approved cable

Form

Form	94001

Technical Data

Operating voltage	24 V AC/DC ±25%
Rated surge voltage	0.8 kV
Operating current per contact	max. 4 A
Locking of ports	M3 (recommended torque 0.4 Nm)

The information in this brochure has been compiled with the utmost care.
Liability for the correctness completeness and topicality of the information is restricted to gross negligence. Version: 01/22

Protection	IP67 inserted and tightened (EN 60529)
Housing	Black plastic (gray on request)
General data	
Temperature range	-25...+85 °C, depending on cable quality
Cables	
No./diameter of wires	3× 0.75 mm²
Wire isolation	PP (bk num, gnye)
C-track properties	10 Mio.
Outer Ø	5.9 mm ±5%
Cable identification	636
Cable Type	3 (PUR)
Approval (cable)	cURus (AWM-Style 20549/10493); CE conform
Cable weight [g/m]	56,1 g
Material (wire)	Cu wire, bare
Resistor (core)	max. 26 Ω/km (20 °C)
Single wire Ø (core)	0.15 mm
Construction (core)	42× 0.15 mm (multi-strand wire class 6)
Diameter (core)	3× 0.75 mm²
AWG	similar to AWG 18
Material (wire isolation)	PP
Material property (wire isolation)	CFC-, halogen-, cadmium-, silicone- and lead-free
Shore hardness (wire isolation)	70 ±5 D
Wire-Ø incl. isolation	1.85 mm ±5%
Color/numbering of wires	bk numbered, gnye longitudinally striped
Stranding combination	3 wires twisted
Shield	no
Material (jacket)	PUR
Material property (jacket)	CFC-, halogen-, cadmium-, silicone- and lead-free, matt, low-adhesion, machine easy to process, abrasion-resistant, hydrolysis and microbial resistant
Shore hardness (jacket)	90 ±5 A
Outer-Ø (jacket)	5.9 mm ±5%
Color (jacket)	black
Jacket Color	black
Cable labeling	see frame delivery specifications 7000-00000-001
chemical resistance	good resistance to oil, gasoline and chemicals (EN 60811-404)
thermal resistance	flame retardand UL 1581 Section 1090 (H), CSA FT2 / IEC 60332-2-2
Nominal voltage	300 V AC
Test voltage	2500 V AC
Current load capacity	to DIN VDE 0298-4
Temperature range (fixed)	-40...+80 °C
Temperature range (fixed)	-40...+80 °C, (+90 °C at max. 10 000 operating hours)
Temperature range (mobile)	-25...+80 °C
Temperature range (mobile)	-25...+80 °C, (+90 °C at max. 10 000 operating hours)
Bend radius (fixed)	5× outer Ø
Bend radius (moving)	10× outer Ø
Bend radius (moving)	10× outer Ø
No. of bending cycles (C-track)	max. 10 Mio. (25 °C)
Travel speed (C-track)	max. 3 m/s
Acceleration (C-track)	max. 10 m/s²
Torsion stress	±180°/m
No. of torsion cycles	max. 2 Mio. (25 °C)
Torsion speed	35 cycles/min
Material (jacket)	PUR (UL/CSA)

The information in this brochure has been compiled with the utmost care.
Liability for the correctness completeness and topicality of the information is restricted to gross negligence. Version: 01/22

MURR ELEKTRONIK
stay connected

Commercial data	
country of origin	CZ
customs tariff number	85444290
EAN	4048879659338
eClass	27279218
Packaging unit	1.000

The information in this brochure has been compiled with the utmost care.
Liability for the correctness completeness and topicality of the information is restricted to gross negligence. Version: 01/22