Brand of NTN corporation

# Technical data

## USFLE201

Bearing units



Grey cast housing, radial insert ball bearing with socket set screws, single lip seal

## KIT CONTENT

**US.201.G2, FLE203**

## VISUAL (S)

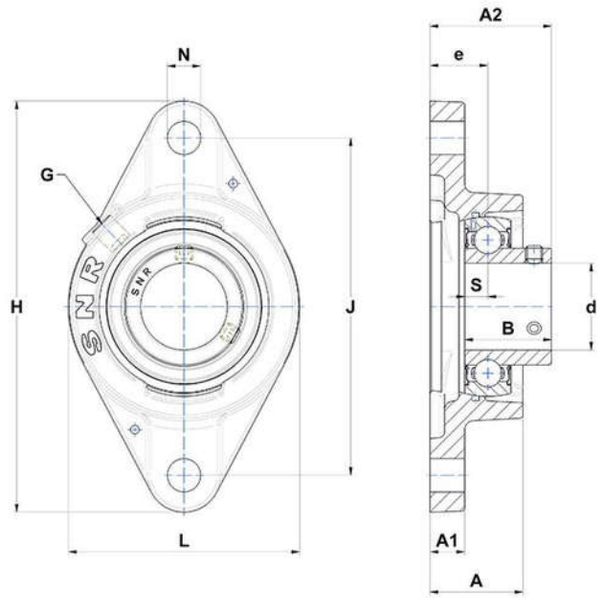


## PRODUCT DEFINITION

| | |
|---|---|
| **Brand** | SNR |
| **A - Housing height** | 26 mm |
| **A1 - Housing foot height / flange height** | 9,5 mm |
| **A2 - Total height from mounting surface** | 33 mm |
| **B - Width of Inner Ring** | 22 mm |
| **d - Shaft diameter** | 12 mm |


**NTN Europe**
1 rue des Usines · BP 2017 · 74010 Annecy Cedex · France · Tel. +33 (0)4 50 65 30 00
S.A. au capital de 322 639 919 € · RCS ANNECY B 325 821 072 · Id. Fiscale : FR 48 325 821 072
SIRET 325 821 072 00015 · Code APE 2815 Z · Code NACE 28.15

| PRODUCT DEFINITION | |
|---|---|
| **e - Distance mounting surface to bearing center** | 17 mm |
| **G - Grease fitting** | M6 |
| **H - Housing length, width or diameter** | 99 mm |
| **J - Mounting holes distance** | 76,5 mm |
| **L - Housing width / diameter** | 57 mm |
| **N - Mounting hole dimension** | 11,5 mm |
| **S - Distance front side/bearing centre** | 6 mm |

| PRODUCT PERFORMANCE | |
|---|---|
| **C - Dynamic load rating** | 9550000 mN |
| **C0 - Static load rating** | 4780000 mN |
| **Operating temperature min.** | 253,15 °K |
| **Operating temperature max.** | 373,15 °K |

| OTHER FEATURES | |
|---|---|
| **Mass** | 0,35 kg |
| **Recommended tightening torque for set screw** | 3.5 N-m |