212914
BEK-P14-G5T-IBS
Spotlight

- Constant level of light intensity over the entire voltage range
- Homogeneous luminous field
- External trigger input
- Internal control of power output
- High efficiency
- Low levels of heat produced
- Robust metal housing



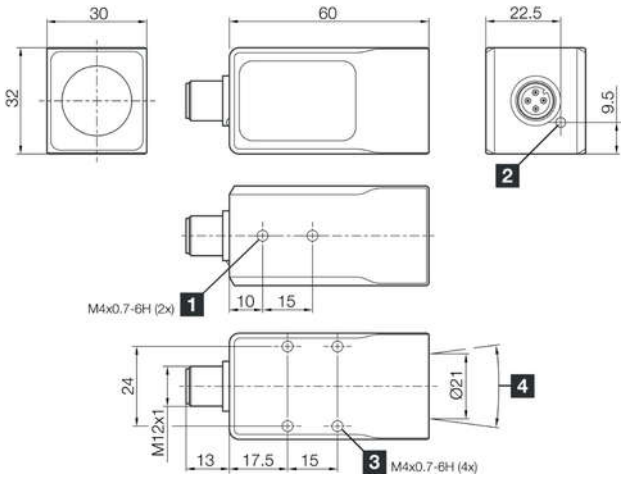

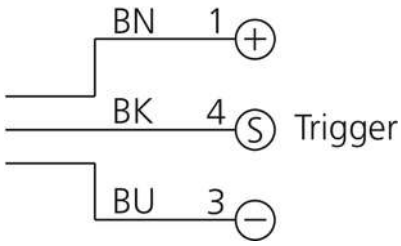

1) 4 mm deep
2) LED OPERATION
3) 6 mm deep
4) Reflected beam angle °

BK: black BN: brown BU: blue

Function

Technical data (typ.)	+20°C
Service voltage	18 … 30 V DC
No-load current (max.)	150 mA (24 V DC)
Power	3.6 W (24 V)
Inverse polarity protection	Yes
Illuminated area	Ø 21 mm
Light aperture	axial
Housing material	Aluminum (Black, Anodized)
Material	Glass, colorless transparent (Protection optics)
Weight	114 g
Protection class	III, operation on protective low voltage
Risk group (DIN EN 62471)	Risk group 2
Approvals	UL
Design	Spot light
Characteristics	Trigger input
Trigger input high level	> 3.4 … 30.0 V
Trigger input low level	< 2.8 V
Light source	LED
Color	White
Wavelength	6500 K
Deflection angle FWHM	14°

212914
BEK-P14-G5T-IBS
Spotlight

Technical data (typ.)	+20°C
Light intensity	■ 133 kLx (100.0 mm) ■ 75.0 kLx (200.0 mm) ■ 13.5 kLx (500.0 mm)
Control	Integrated power control
Display	LED Green - Operating display
Shock/vibration load	30 g, 11 ms / 10 … 55 Hz, 1.0 mm
Ambient temperature during operation	0 … +40 °C
Protection type	IP 67
Connection	Connector, M12, 3-pin
Connection cable	VK …

More information / accessories	https://www.di-soric.com/212914

© di-soric . Right to change reserved