BF26T4A04860

FOUR-POLE CONTACTOR, IEC OPERATING CURRENT ITH (AC1) = 45A, AC COIL 60HZ, 48VAC



Product designation			Power contactor
Product type designation			BF26
Contact characteristics			
Number of poles		Nr.	4
Rated insulation voltage Ui IEC/EN		V	690
Rated impulse withstand voltage Uimp		kV	6
Operational frequency			
	min	Hz	25
	max	Hz	400
IEC Conventional free air thermal current Ith		A	45
Operational current Ie			
	AC-1 (≤40°C)	A	45
	AC-1 (≤55°C)	A	36
	AC-1 (≤70°C)	A	32
	AC-3 (≤440V ≤55°C)	A	26
	AC-4 (400V)	A	11.5
Rated operational power AC-1 (T≤40°C)			
	230V	kW	17
	400V	kW	30
	500V	kW	37
	690V	kW	51
IEC max current Ie in DC1 with L/R ≤ 1ms with 1 poles in series			
	≤24V	A	25
	48V	A	21
	75V	A	18
	110V	A	6
	220V	A	–
IEC max current Ie in DC1 with L/R ≤ 1ms with 2 poles in series			
	≤24V	A	28
	48V	A	28
	75V	A	25
	110V	A	22
	220V	A	2
IEC max current Ie in DC1 with L/R ≤ 1ms with 3 poles in series			
	≤24V	A	28
	48V	A	28
	75V	A	25
	110V	A	24
	220V	A	20
IEC max current Ie in DC1 with L/R ≤ 1ms with 4 poles in series			
	≤24V	A	28
	48V	A	28
	75V	A	25
	110V	A	24
	220V	A	26

The characteristics described in this document are subject to updates or modifications at any time. The descriptions, technical and functional information, illustrations and instructions in this brochure are purely illustrative, and are consequently not contractually binding

IEC max current Ie in DC3-DC5 with L/R ≤ 15ms with 1 poles in series			
	≤24V	A	18
	48V	A	15
	75V	A	13
	110V	A	2
	220V	A	–
IEC max current Ie in DC3-DC5 with L/R ≤ 15ms with 2 poles in series			
	≤24V	A	20
	48V	A	20
	75V	A	18
	110V	A	13
	220V	A	3
IEC max current Ie in DC3-DC5 with L/R ≤ 15ms with 3 poles in series			
	≤24V	A	25
	48V	A	25
	75V	A	20
	110V	A	18
	220V	A	19
IEC max current Ie in DC3-DC5 with L/R ≤ 15ms with 4 poles in series			
	≤24V	A	30
	48V	A	30
	75V	A	25
	110V	A	20
	220V	A	15
Short-time allowable current for 10s (IEC/EN60947-1)		A	210
Protection fuse			
	gG (IEC)	A	50
	aM (IEC)	A	32
Making capacity (RMS value)		A	260
Breaking capacity at voltage			
	440V	A	208
	500V	A	184
	690V	A	168
Resistance per pole (average value)		mΩ	2
Power dissipation per pole (average value)			
	Ith	W	4
	AC3	W	1.4
Tightening torque for terminals			
	min	Nm	2.5
	max	Nm	3
	min	lbin	1.8
	max	lbin	2.2
Tightening torque for coil terminal			
	min	Nm	0.8
	max	Nm	1
	min	lbin	0.8
	max	lbin	0.74
Max number of wires simultaneously connectable		Nr.	2
Conductor section			
AWG/Kcmil			
	max		6
Flexible w/o lug conductor section			
	min	mm²	2.5

The characteristics described in this document are subject to updates or modifications at any time. The descriptions, technical and functional information, illustrations and instructions in this brochure are purely illustrative, and are consequently not contractually binding

		max	mm²	16
Flexible c/w lug conductor section				
		min	mm²	1
		max	mm²	10
Flexible with insulated spade lug conductor section				
		min	mm²	1
		max	mm²	10
Power terminal protection according to IEC/EN 60529				IP20 when properly wired
Mechanical features				
Operating position				
		normal		Vertical plan
		allowable		±30°
Fixing				Screw / DIN rail 35mm
Weight			g	508
Conductor section				
AWG/kcmil conductor section				
		max		6
Operations				
Mechanical life			cycles	20000000
Electrical life			cycles	1600000
Safety related data				
Performance level B10d according to EN/ISO 13489-1				
		rated load	cycles	1600000
		mechanical load	cycles	20000000
Mirror contats according to IEC/EN 609474-4-1				yes
EMC compatibility				yes
AC coil operating				
Rated AC voltage at 60Hz			V	48
AC operating voltage				
of 60Hz coil powered at 60Hz				
	pick-up			
		min	%Us	80
		max	%Us	110
	drop-out			
		min	%Us	20
		max	%Us	55
AC average coil consumption at 20°C				
of 60Hz coil powered at 60Hz				
		in-rush	VA	75
		holding	VA	9
Dissipation at holding ≤20°C 50Hz			W	2.5
Max cycles frequency				
Mechanical operation			cycles/h	3600
Operating times				
Average time for Us control				
in AC				
	Closing NO			
		min	ms	8
		max	ms	24
	Opening NO			
		min	ms	5
		max	ms	15

The characteristics described in this document are subject to updates or modifications at any time. The descriptions, technical and functional information, illustrations and instructions in this brochure are purely illustrative, and are consequently not contractually binding

		Closing NC		
			min	ms 9
			max	ms 20
		Opening NC		
			min	ms 9
			max	ms 17
UL technical data				
Full-load current (FLA) for three-phase AC motor				
			at 480V	A 21
			at 600V	A 22
Yielded mechanical performance				
	for single-phase AC motor			
			110/120V	HP 2
			230V	HP 5
	for three-phase AC motor			
			200/208V	HP 7.5
			220/230V	HP 7.5
			460/480V	HP 15
			575/600V	HP 20
General USE				
	Contactor			
			AC current	A 45
Short-circuit protection fuse, 600V				
	High fault			
			Short circuit current	kA 100
			Fuse rating	A 100
			Fuse class	J
	Standard fault			
			Short circuit current	kA 5
			Fuse rating	A 100
Ambient conditions				
Temperature				
	Operating temperature			
			min	°C -50
			max	°C 70
	Storage temperature			
			min	°C -60
			max	°C 80
Max altitude				m 3000
Resistance & Protection				
Pollution degree				3
Dimensions				

The characteristics described in this document are subject to updates or modifications at any time. The descriptions, technical and functional information, illustrations and instructions in this brochure are purely illustrative, and are consequently not contractually binding

BF26T4A04860

FOUR-POLE CONTACTOR, IEC OPERATING CURRENT ITH (AC1) = 45A, AC COIL 60HZ, 48VAC

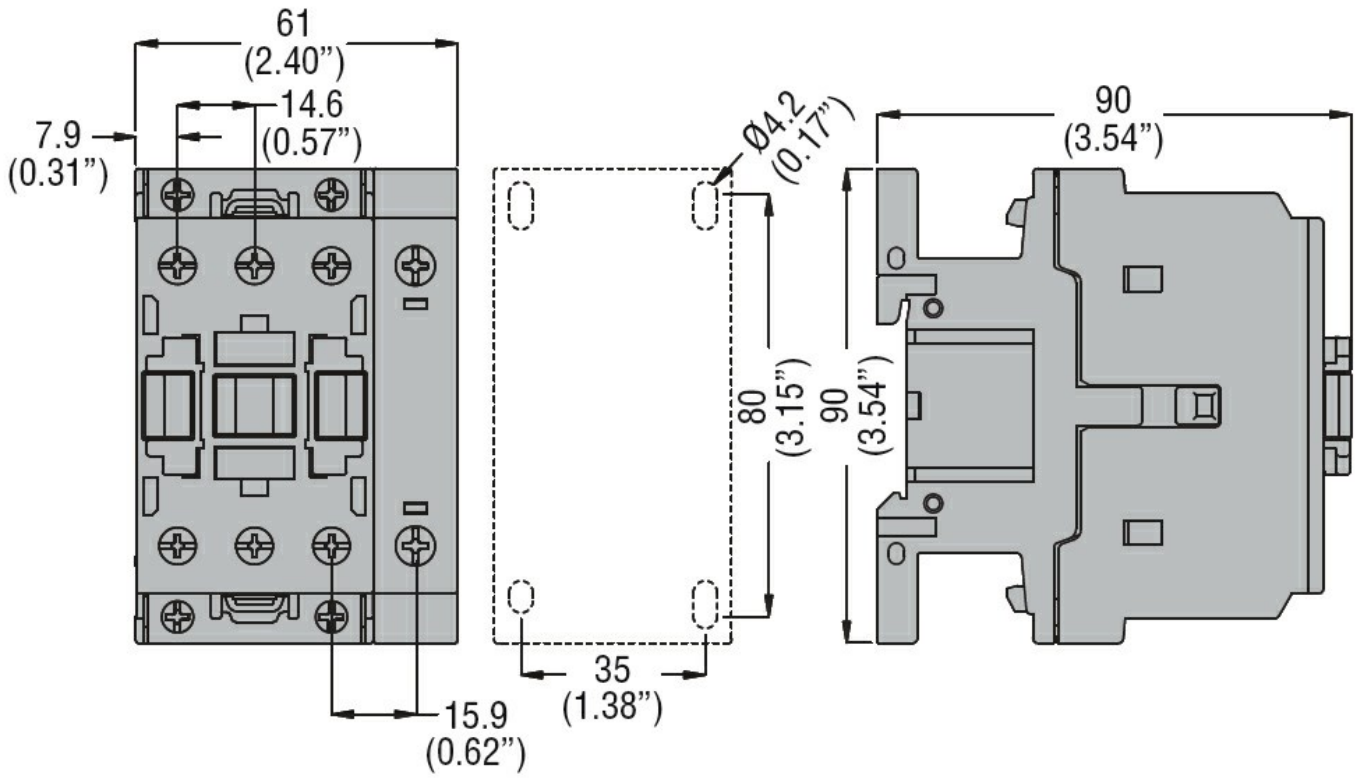

Wiring diagrams

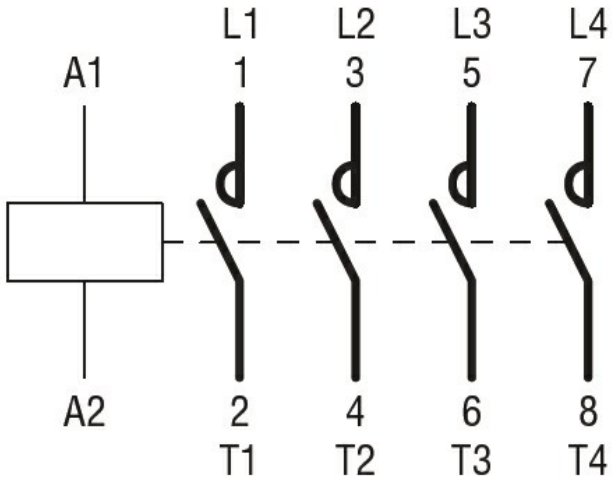

Certifications and compliance

Compliance

CSA C22.2 n° 60947-1
CSA C22.2 n° 60947-4-1
IEC/EN/BS 60947-1
IEC/EN/BS 60947-4-1
UL 60947-1
UL 60947-4-1

Certificates

CCC
cULus
EAC

ETIM classification

The characteristics described in this document are subject to updates or modifications at any time. The descriptions, technical and functional information, illustrations and instructions in this brochure are purely illustrative, and are consequently not contractually binding

ETIM 8.0

EC000066 - Power contactor, AC switching

The characteristics described in this document are subject to updates or modifications at any time. The descriptions, technical and functional information, illustrations and instructions in this brochure are purely illustrative, and are consequently not contractually binding