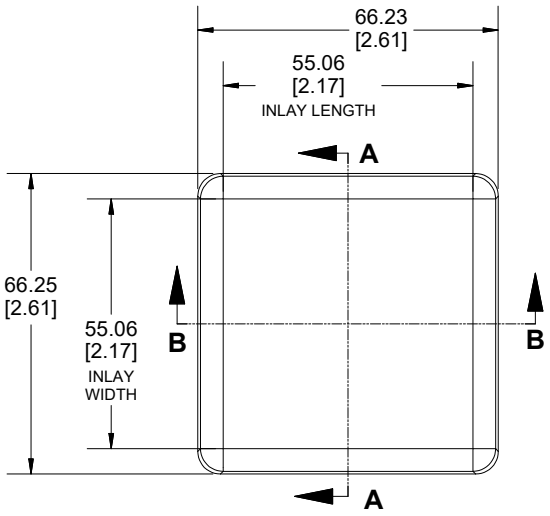

TOP VIEW

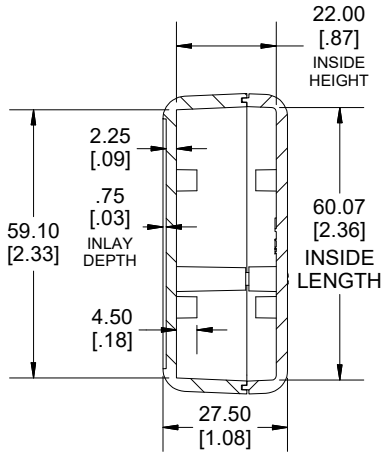

SECTION A-A
SIDE VIEW

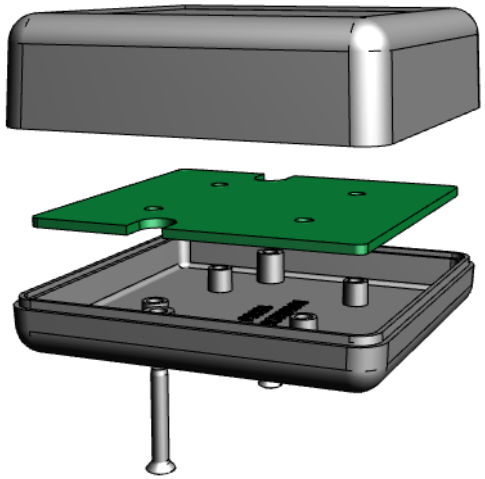

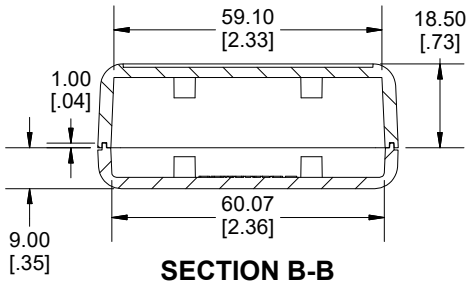

SECTION B-B
END VIEW

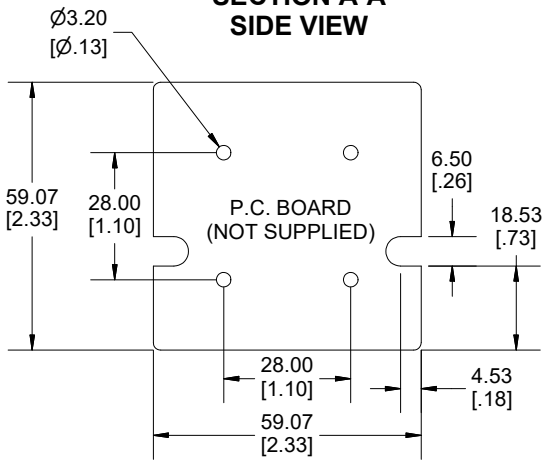

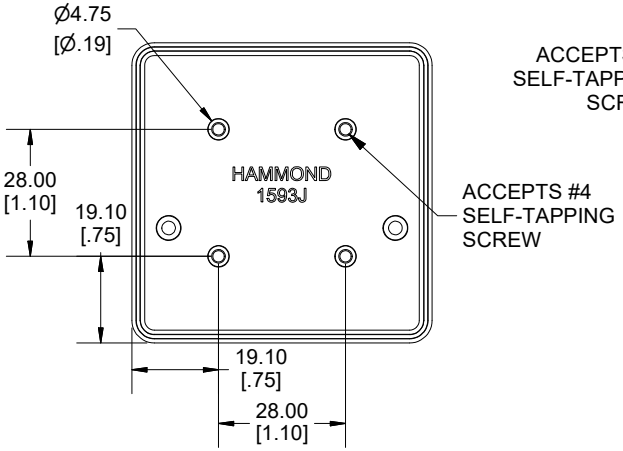

INSIDE BOTTOM

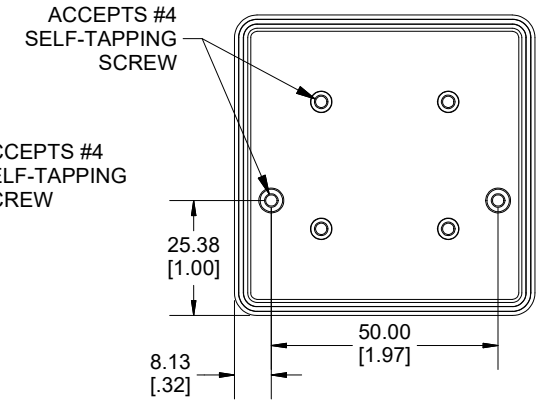

INSIDE TOP

Enclosures can be Factory Modified (Milling, Drilling, Printing etc.)
Contact Factory (modshop@hammfg.com) for quotes
Solid models of this enclosure available in .stp or .x_t
(Part number and text placement/orientation on our products are subject to change, we do not recommend using them as a locating reference for modification purposes)

NOTE	
Enclosure molded from GP ABS (UL94-HB) plastic. Purchased assembly includes top and bottom cover, and 2 cover screws.	
Recommended Cover Screw Torque - 57lbf-in (40cN-m)	
1593	
1593J Regular Enclosure	
Black Enclosure	1593JBK
Grey Enclosure	1593JGY
Translucent Blue Enclosure	1593JTBU
ACCESSORIES	
Cover Screws #4 X 3/4" Self-Tapping (100 Pkg)	1593QS100 (Silver)
	1593QS100BK (Black)
P.C. Board Screws #4 X 1/4" Self-Tapping	1593ATS50 (Pkg 50)
	1593ATS100 (Pkg 100)
Nylon Belt Clip	1599CLIP (Black)
	1599CLIPGY (Grey)

Dimensions:
mm
[inches]

HAMMOND MANUFACTURING®

1593J

www.hammondmfg.com

REV: 27.09.2019