E10136

Wirable socket

SDOGH042PLSFKPG

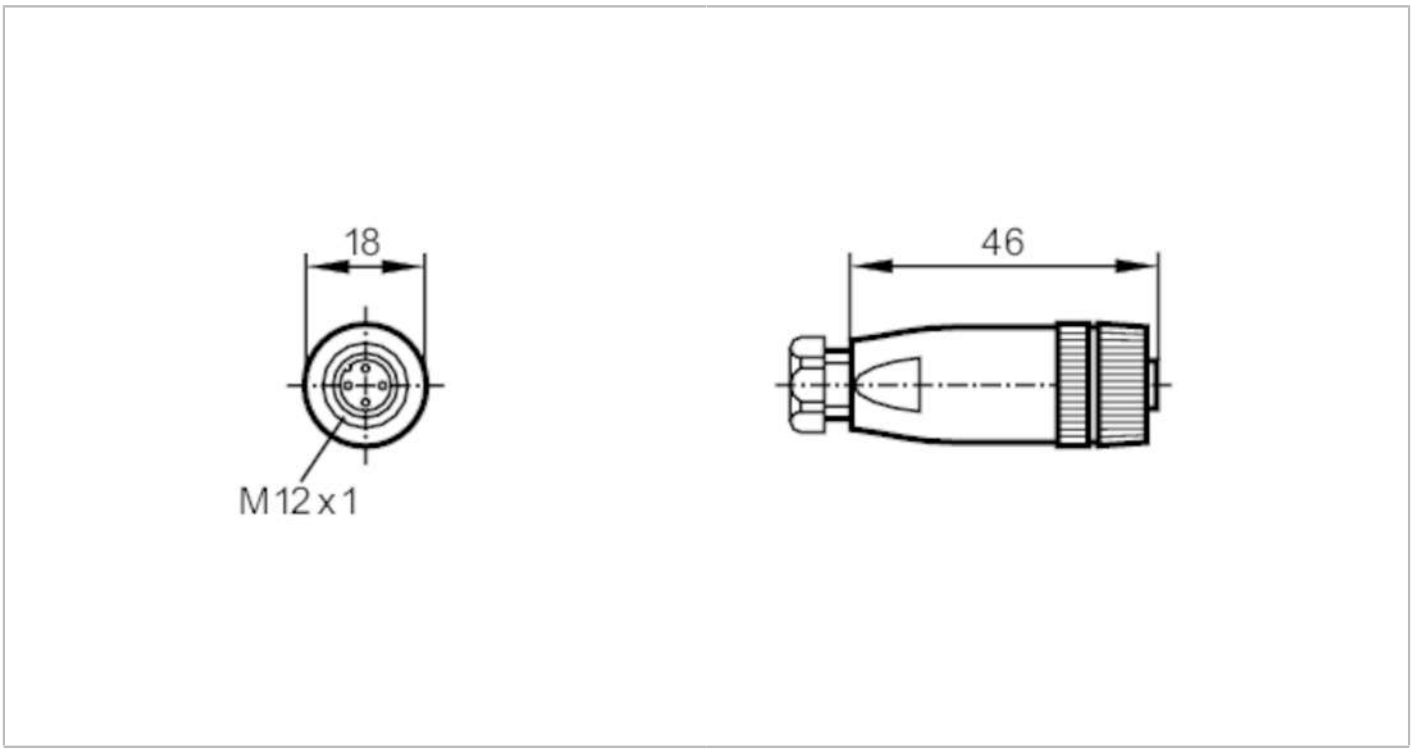

Electrical data		
Operating voltage	[V]	10...30 DC
Outputs		
Electrical design		PNP
Operating conditions		
Ambient temperature	[°C]	-40...85
Protection		IP 67
Mechanical data		
Weight	[g]	14
Dimensions	[mm]	18 x 18 x 46
Materials		PA
Moulded-body material		PA
Material nut		PA
Displays / operating elements		
Display	switching status	1 x LED, yellow
	operation	1 x LED, green
Remarks		
Pack quantity		1 pcs.

Electrical connection

screw terminals: ...0.75 mm²; Cable sheath: Ø 4...6 mm

Electrical connection - socket

Connector: 1 x M12, straight; coding: A; Moulded body: PA; Locking: PA

E10136

Wirable socket

SDOGH042PLSFKPG



Connection

