E30522

Gasket

SEAL RING G1/2 FKM

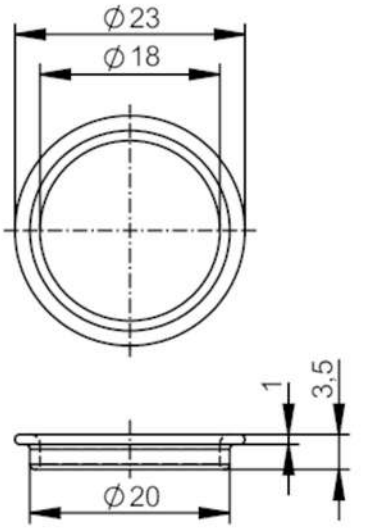

Application		
Design		for units with process connection G ½
Operating conditions		
Ambient temperature	[°C]	-25...200
Tests / approvals		
Standard		DIN EN ISO 1179-2
Mechanical data		
Weight	[g]	7.65
Inside diameter	[mm]	18
External diameter	[mm]	23
Materials		FKM
Remarks		
Pack quantity		1 pcs.