NEOKIT D0 fuse disconnectors 400VAC

IEC D0 & D Fuse Bases

The D0 fuse-system is installed in low voltage ditribution units, where fuse-links are accessible to non trained persons and can also be replaced by them.

The system is the most modern of the screw systems and designed for 400VAC/250VDC networks.

The D0 fuse range comprises the standardized sizes D01, D02 and D03.

D0 fuse disconnectors are used in combination with D0 fuse-links “gG” for the protection of cables and power lines. They limit and cut-off unacceptable overcurrents and short circuit currents up to their nominal breaking capacity. D0 fuse-links “gG” also protect equipments and installations against dynamic effects of high short circuit currents.



Features Benefits

- Insulated body suitable for high mechanical and thermal impacts
- Top and bottom contacts made of nickel plated copper alloy
- Safe cut-off short circuits and over currents due to special design of fuse element
- Clear indication of operation condition due to coloured indicator on top contact
- Low power dissipation
- Optimized size
- Resistant to aging

Applications

- House incoming units
- Distribution cabinets
- Meter distribution units
- Installation cabinets
- Fuse boxes

Technical data overview

Voltage AC	400 VAC
Ampere Range (A)	2 ... 16 A
Product Size	D01
Number of Poles	1 to 3

Standards

DIN VDE 0636-301
DIN EN 60715

RoHS 2002/95/EC

MERSEN reserves the right to change, update or correct, without notice, any information contained in this datasheet.

NEOKIT D0 fuse disconnectors 400VAC

Product range



09490.021000

Size D01 (E14) with fuse-monitoring, DIN rail mounting

Catalog number	Reference number	Rated voltage AC (IEC)	Rated current I_n	Connection	Number of poles/ phases	Weight	Package
09490.021000	D1004390	400 V	2 A	Cross section 1,5 to 16 mm²	1	61 g	12
09490.041000	E1004391	400 V	4 A	Cross section 1,5 to 16 mm²	1	60.6 g	12
09490.061000	F1004392	400 V	6 A	Cross section 1,5 to 16 mm130	1	60.8 g	12
09490.062000	G1004393	400 V	6 A	Cross section 1,5 to 16 mm130	2	121.6 g	6
09490.063000	J1004395	400 V	6 A	Cross section 1,5 to 16 mm130	3	181.7 g	4
09490.101000	K1004396	400 V	10 A	Cross section 1,5 to 16 mm130	1	60.7 g	12
09490.102000	L1004397	400 V	10 A	Cross section 1,5 to 16 mm130	2	121.4 g	6
09490.103000	M1004398	400 V	10 A	Cross section 1,5 to 16 mm130	3	182.3 g	4
09490.131000	P1004400	400 V	13 A	Cross section 1,5 to 16 mm130	1	59.2 g	12
09490.132000	Q1004401	400 V	13 A	Cross section 1,5 to 16 mm130	2	121.8 g	6
09490.133000	R1004402	400 V	13 A	Cross section 1,5 to 16 mm130	3	182.3 g	4
09490.161000	S1004403	400 V	16 A	Cross section 1,5 to 16 mm130	1	60.8 g	12
09490.162000	T1004404	400 V	16 A	Cross section 1,5 to 16 mm130	2	121.8 g	6
09490.163000	W1004406	400 V	16 A	Cross section 1,5 to 16 mm130	3	180.9 g	4



09490.021100

Size D01 (E14) without fuse-monitoring, DIN rail mounting

Catalog number	Reference number	Rated voltage AC (IEC)	Rated current I_n	Connection	Number of poles/ phases	Weight	Package
09490.021100	N1004376	400 V	2 A	Cross section 1,5 to 16 mm²	1	59.2 g	12
09490.041100	P1004377	400 V	4 A	Cross section 1,5 to 16 mm²	1	59.3 g	12
09490.061100	Q1004378	400 V	6 A	Cross section 1,5 to 16 mm130	1	59.3 g	12
09490.062100	R1004379	400 V	6 A	Cross section 1,5 to 16 mm130	2	119.2 g	6
09490.063100	S1004380	400 V	6 A	Cross section 1,5 to 16 mm130	3	177.4 g	4
09490.101100	T1004381	400 V	10 A	Cross section 1,5 to 16 mm130	1	59.2 g	12
09490.102100	V1004382	400 V	10 A	Cross section 1,5 to 16 mm130	2	119.2 g	6
09490.103100	W1004383	400 V	10 A	Cross section 1,5 to 16 mm130	3	178.4 g	4
09490.131100	X1004384	400 V	13 A	Cross section 1,5 to 16 mm130	1	59.2 g	12
09490.132100	Y1004385	400 V	13 A	Cross section 1,5 to 16 mm130	2	119.4 g	6
09490.133100	Z1004386	400 V	13 A	Cross section 1,5 to 16 mm130	3	181.5 g	4
09490.161100	A1004387	400 V	16 A	Cross section 1,5 to 16 mm130	1	59.3 g	12
09490.162100	B1004388	400 V	16 A	Cross section 1,5 to 16 mm130	2	119.6 g	6
09490.163100	C1004389	400 V	16 A	Cross section 1,5 to 16 mm130	3	177.5 g	4

MERSEN reserves the right to change, update or correct, without notice, any information contained in this datasheet.

NEOKIT D0 fuse disconnectors 400VAC

Dimensions

NEOKIT fuse-disconnector

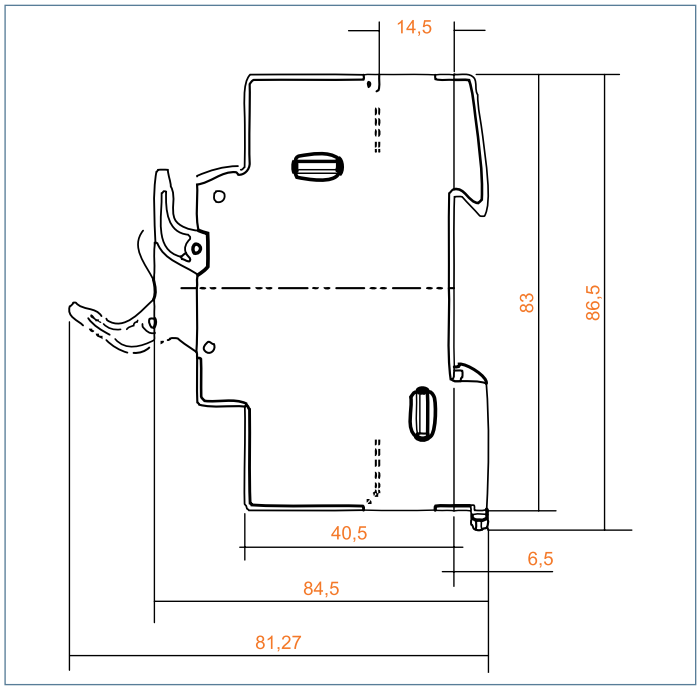

Dimensions in mm

NEOKIT fuse-disconnector

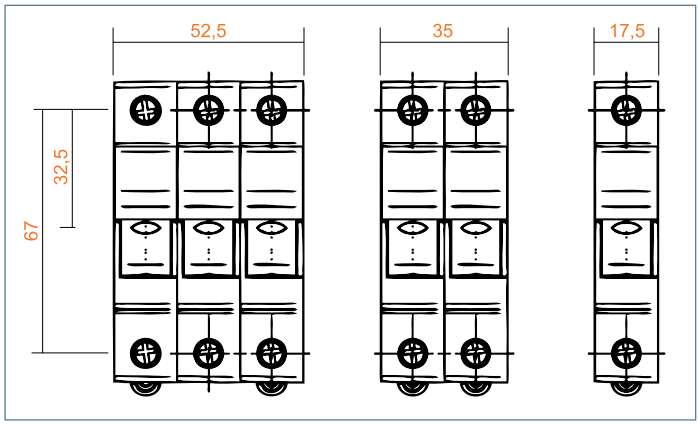

Dimensions in mm

MERSEN reserves the right to change, update or correct, without notice, any information contained in this datasheet.

NEOKIT D0 fuse disconnectors 400VAC

Accessories



01714.000200



01715.000200



11714.000220



11715.000220



01715.000000



01716.333000

D0-screw caps 400V AC synthetic

Catalog number	Reference number	Description	Weight kg[1)]	Package
01714.000200	E212501	D01, E14, 16A, with testing hole	0.0118	20
01715.000200	P211981	D02, E18, 63A, with testing hole	0.0116	20
11714.000220	R214536	D01, E14, 16A, with sealing and testing hole	0.0116	20
11715.000220	S214537	D02, E18, 63A, with sealing and testing hole	0.0116	20
01715.000000	L206435	D02, E18, 63A, without testing hole	0.012	20
01715.890200	M214026	D02, E18, 63A, with adapter insert for fuse links size D01	0.0124	20
01716.333000	F200726	Screw cap wrench, with bottle opener	0,030	1



01711.000200

D0-screw caps 400/440 V AC, 250 V DC porcelain, with removal grips

Catalog number	Reference number	Description	Weight kg[1)]	Package
01711.000200	T215044	D02, E18, 63A, with testing hole	0.019	20
01712.000200	V215045	D03, M30x2, 100A, with testing hole	0,084	10



01705.002000



01705.004000



01705.006000



01705.010000



01708.000000

D0-cartridge ring adapter inserts D01 E14

Catalog number	Reference number	Description	Weight kg[1)]	Package
01705.002000	J216576	2A, pink	0.0004	50
01705.004000	J219681	4A, brown	0.0004	50
01705.006000	P206438	6A, green	0.0004	50
01705.010000	M213014	10A, red	0.0004	50
01708.000000	J212505	Screw removal and insertion key to remove and insert cartridge ring adapter inserts size D01-D03	19,7 g	1

1) weight in kg per piece or set including package

MERSEN reserves the right to change, update or correct, without notice, any information contained in this datasheet.

Accessories


01706.020000


01706.025000


01706.035000


01706.050000


01706.002000


01706.004000


01706.006000


01706.010000


01706.016000

D0-cartridge ring adapter inserts D02 E18

Catalog number	Reference number	Description	Application	Weight kg[1)]	Package
01706.020000	S200668	20A, blue	-	0.005	50
01706.025000	R213524	25A, yellow	-	0.006	50
01706.035000	J216070	35A, black	-	0.005	50
01706.050000	R218630	50A, white	-	0.007	50
01706.002000	K216577	2A, pink	For D01 fuse links in D02 fuse bases	0.005	50
01706.004000	S222127	4A, brown	For D01 fuse links in D02 fuse bases	0.006	50
01706.006000	R211983	6A, green	For D01 fuse links in D02 fuse bases	0.006	50
01706.010000	H216069	10A, red	For D01 fuse links in D02 fuse bases	0.006	50
01706.016000	Q218629	16A, grey	For D01 fuse links in D02 fuse bases	0.005	50


01707.080000

D0-cartridge ring adapter inserts D03 M30x2

Catalog number	Reference number	Description	Weight kg[1)]	Package
01707.080000	T200669	80A, silver	0,0016	20


01714.800000


01714.830000


01714.820000

Locking devices

Catalog number	Reference number	Description	Weight kg[1)]	Package
01714.800000	D212546	Locking cap for D01 E14 fuse-bases for authorized personal only (EVU)	0,0122	25
01714.810000	P213062	Locking cap for D01 E14 fuse-bases	0,0124	25
01714.820000	K213564	Special key for locking caps for authorized personal only (EVU)	0,0325	10
01714.830000	J214069	Special key for locking caps	0,0329	10
01715.800000	R214582	Locking cap for D02 E18 fuse-bases for authorized personal only (EVU)	0,014	25
01715.810000	Y215094	Locking cap for D02 E18 fuse-bases	0,0137	25

1) weight in kg per piece or set including package

MERSEN reserves the right to change, update or correct, without notice, any information contained in this datasheet.

Accessories



01707.000000



01713.000000

Adapter inserts

Catalog number	Reference number	Description	Weight kg[1)]	Package
01707.000000	T211985	Adapter (space holder) for Size D02 fuse-links in Size D03 bases	0,0174	30
01709.000000	P214028	Adapter for Size D02 fuse-links in Size D03 bases	0,0013	25
01713.000000	Z215049	Adapter for Size D01 fuse-links in Size D02 bases	0,0009	50
01733.000000	J218117	Adapter for Size D01 fuse-links in DL-bases	0,0002	100

1) weight in kg per piece or set including package

MERSEN reserves the right to change, update or correct, without notice, any information contained in this datasheet.