DRG. No. C 42651	SWITCH V4LS	
SHEET OF SHEETS		
DRAWN J.B.	DATE 20.9.95	APPROVED
TRACED	SCALE 5:1	DRAWING OFFICE: P. Vinenga. / SALES DEPT.

DO NOT SCALE

INSTALLATION DRAWING

THIRD ANGLE PROJECTION

© THIS DRAWING IS THE PROPERTY OF BURGESS MICRO SWITCH CO. LTD. AND MUST NOT BE USED OR COPIED, ENTIRELY OR IN PART, WITHOUT THE PERMISSION OF BURGESS MICRO SWITCH CO. LTD.

SPECIFICATION

ACTUATING FORCE :- 2.5N (9.0ozf) MAX

RELEASE FORCE :- 0.5N (1.8ozf) MIN

FREE POSITION :- 12.9 (0.5) MAX

OPERATING POSITION :- 11.7 ±0.4 (0.46)

MOVEMENT DIFFERENTIAL :- 0.6 (0.02) MAX

OVERTRAVEL :- 2.2 (.09) MIN

TOTAL TRAVEL :- 9.2 (.36) MIN

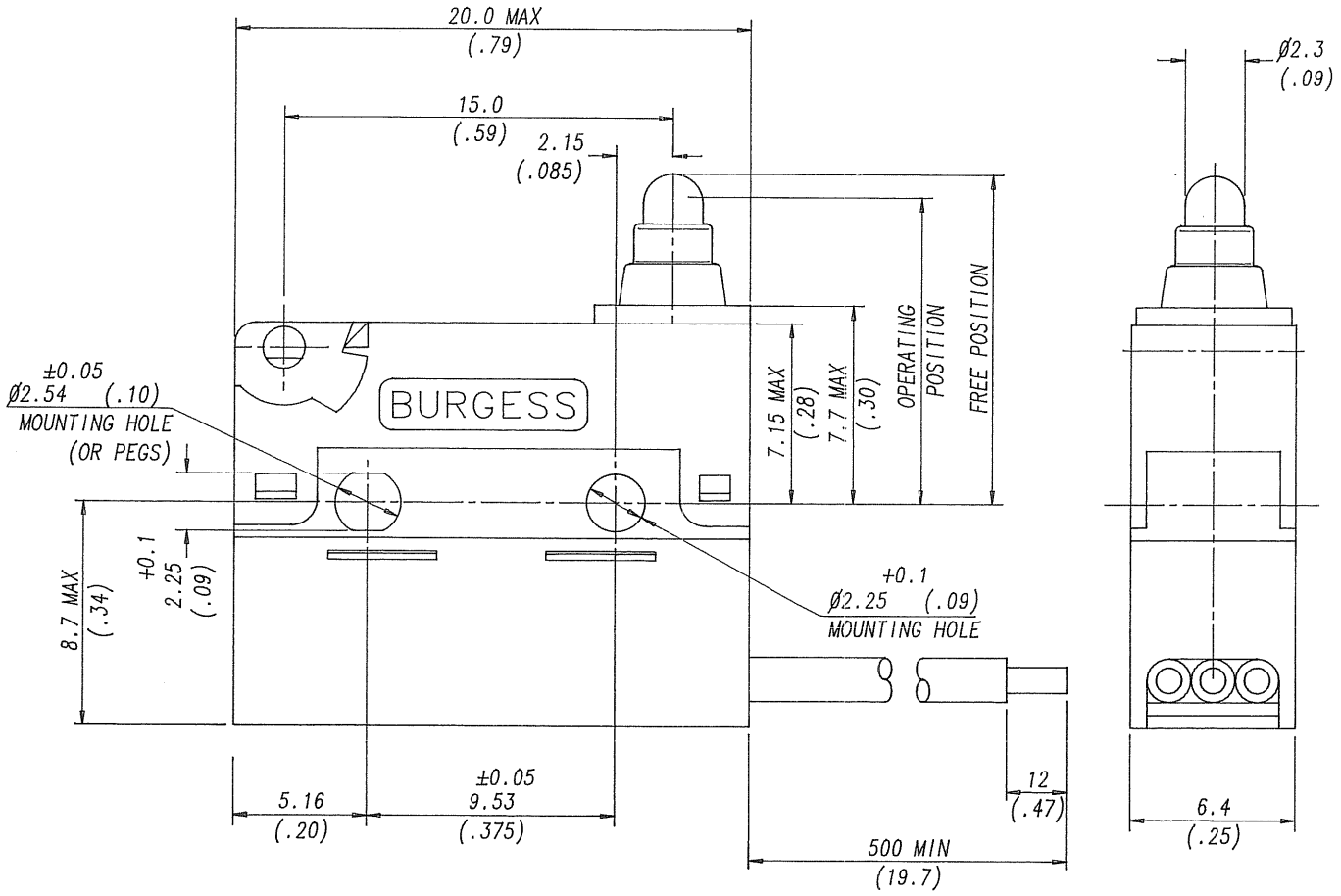

DIAGRAM OF CONNECTIONS

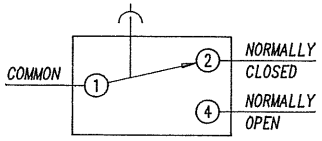

BURGESS MICRO SWITCH COMPANY LTD.
DUKES WAY, TEAM VALLEY, GATESHEAD,
TYNE & WEAR NE11 0UB
Tel. 091 4877171 Telex: 53229 Fax: (3) 091 4871610

ISSUE No. & DATE	1	2
		08.05.03

THIS DRAWING MUST ONLY BE AMENDED ON CAD SYSTEM

ALL DIMENSIONS SPECIFIED IN MILLIMETRES.
TOLERANCES UNLESS STATED:- NO DECIMAL PLACE ± 0.5
1 DECIMAL PLACE ± 0.25 2 DECIMAL PLACES ± 0.15
ANGULAR ± 1° INCH-OUNCE UNITS (IN BRACKETS)

DEGREE OF PROTECTION:-

WEIGHT:-

SWITCH V4LS

DRG. No. C 42651

SHEET OF SHEETS

U.D.O. 3091/94

V4L

Snap-action Microswitches

Subminiature

V4L

Characteristics	■ long overtravel of 2.2 mm minimum ■ sealed to (IP6K7) option ■ pre-wired option ■ solder terminals
Rating	250 VAC, 5 A
Dimensions (mm)	20 × 11 × 6.4
Actuator	■ plunger ■ plain lever ■ ice break lever
Approvals	ENEC, UL, CSA

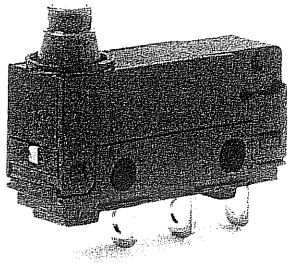

Preferred Range

Ordering Reference	Actuating Force (N)	(ozf)	Sealing	Operating pos. (mm)	Terminal	Circuit	Actuator	Contacts	Electrical rating
V4LS	2,5	9,0	IP6K7	11,7 ± 0,4	Cable 500 mm	CO	Plunger	Ag	250 VAC, 5 A
V4LSA1	2,5	9,0	IP6K7	14,5 ± 0,8	Cable 500 mm	CO	Plain lever	Ag	250 VAC, 5 A
V4LSA2	2,0		IP6K7	16,5 ± 1,0	Cable 500 mm	CO	Plain lever	Ag	250 VAC, 5 A
V4LST7	2,5	9,0	IP6K7	11,7 ± 0,4	Solder	CO	Plunger	Ag	250 VAC, 5 A
V4LST7A1	2,5		IP6K7	14,5 ± 0,8	Solder	CO	Plain lever	Ag	250 VAC, 5 A
V4LST7A2	2,0		IP6K7	14,6 ± 1,0	Solder	CO	Plain lever	Ag	250 VAC, 5 A
V4LT7	2,4	8,6	no symbol	11,7 ± 0,4	Solder	CO	Plunger	Ag	250 VAC, 5 A

Specifications

Housing	Glass fibre reinforced polyamide (PA 6.6)
Plunger	Polyacetal (POM)
Mechanism	Snap-action coil spring mechanism with stainless steel spring. Change-over, normally closed or normally open
Contact carrier	Brass. Moving contact beryllium-copper
Contacts	Fine silver or gold crosspoint
Terminals	V4L – solder tags V4LS – PVC covered leads 0.5 m long
Temperature range °C	–40°C to +85°C
Mechanical life	V4L 2×10^6 cycles/min., V4LS 2×10^5 cycles/min. (impact free actuation)
Protection	V4L series IP40, V4LS series IP6K7, with encapsulated terminals
Mounting	Side mounting to a flat surface
Actuators	Plain lever, Ice break lever
Cowl	Silicon elastomer

Circuit diagram

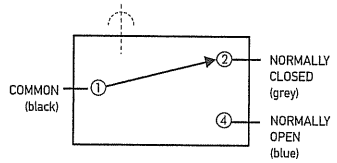

Dimensions

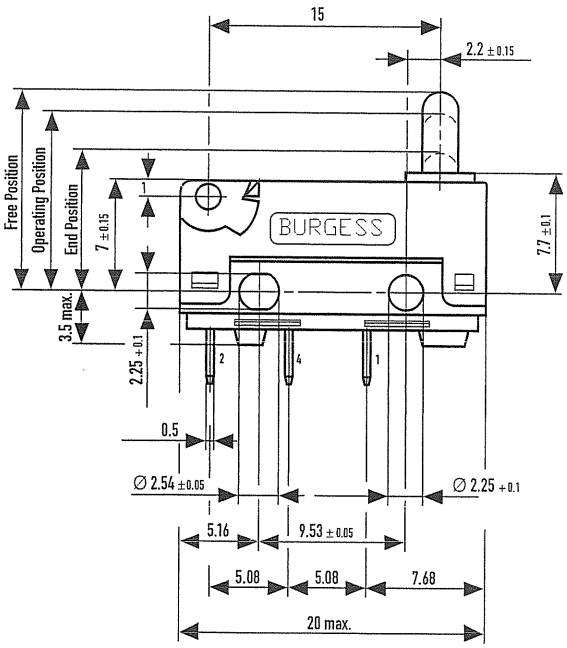

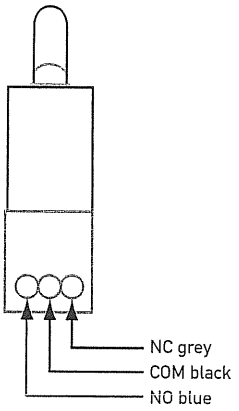

Recommended maximum electrical ratings

Voltage (VAC)	Resistive load (A) (Ag Contact)	Incandescent lamp load (A) (Ni1 Contact)	Inductive load (A) (Ag Contact)	Voltage (VDC) up to	Resistive load (A) (Ag Contact)	Incandescent lamp load (A) (Ni1 Contact)	Inductive load (A) (Ag Contact)
125	5	2	2	30	5	2	3
250	5	2	2	50	1	0,4	1
				75	0,75	0,3	0,75
				125	0,5	0,2	0,03
				250	0,25	0,1	0,03

Operating Characteristics

Actuator		Reference	Actuating Force Maximum (N)	(ozf)	Release Force Minimum (N)	(ozf)	Free Position Maximum (mm)	(in)	Operating Position (mm)	(in)	Movement Differential Maximum (mm)	(in)	Total overtravel Position Minimum (mm)	(in)	Overtravel Minimum (mm)	(in)
Plunger	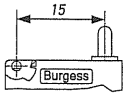	V4LT7	2,4	8,60	0,4	1,44	12,9	0,507	11,7 ± 0.4	0,46 ± 0.012	0,9	0,023	9,2	0,36	2,2	0,09
		V4LST7	2,5	9,00	0,5	1,78	12,9	0,507	11,7 ± 0.4	0,46 ± 0.012	0,9	0,023	9,2	0,36	2,2	0,09
A1 Lever	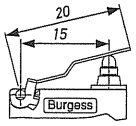	V4L...	2,4	8,60	0,4	1,44	14,5	0,57	12,6 ± 0,8	0,59 ± 0.03	1,0	0,04	9,6	0,38	2,2	0,09
		V4LS...	2,5	9,00	0,5	1,78	14,5	0,57	12,6 ± 0,8	0,59 ± 0.03	1,0	0,04	9,6	0,38	2,2	0,09
Width of lever 4.0 mm/0.16 in																
A2 Lever	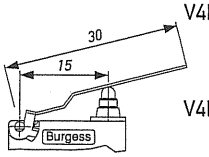	V4L...	1,5	5,70	0,3	1,08	16,5	0,65	13,5 ± 1.0	0,53 ± 0.04	1,3	0,05	9,6	0,38	2,9	1,1
		V4LS...	2	7,20	0,3	1,08	16,5	0,65	13,5 ± 1.0	0,53 ± 0.04	1,3	0,05	9,6	0,38	2,9	1,1
Width of lever 4.0 mm/0.16 in																
F Lever	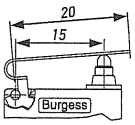	V4L...	For positions and forces of this actuator please contact Saia-Burgess													
		V4LS...														
Width of lever 4.0 mm/0.16 in																

Type coding key for standard products

				Example: V4L	S	T7	C2	A1	G	UL
Basic type	V4L									
Type of sealing		No symbol, unsealed								
	S	Sealed IP6K7								
Terminals		No symbol, pre-wired 500 mm with cable FLRY 0.5 mm^2 and cable box (V4LS only)								
	T7	Solder	2.95 × 0.5 × 3.55 long							
	T8	PCB	0.8 × 0.5 × 4,0 long							
Circuit		No symbol, change over								
	C2	Normally closed								
	C4	Normally open								
Actuators		No symbol, without lever								
	A1	Plain lever	20.0 mm, fitted at the end opposite to plunger							
	A2	Plain lever	30.0 mm, fitted at the end opposite to plunger							
	F	Special lever F type	20.0 mm, fitted at the end opposite to plunger							
Contact Material		No symbol, Ag								
	G	Gold plate on silver (GP)								
	X	Gold alloy on silver palladium crosspoint (AUX)								
	Other contact materials on special request									
Approvals		No symbol, without approval								
	UL	UL and CSA approval								
	EN	ENEC approval only								
	UN	UL, CSA and ENEC approval								
Special Features	/☐☐☐☐	Saia-Burgess specialise in customer specific solutions. Additional product variants are available or can be provided. If your requirements cannot be satisfied from the options listed, please contact www.saia-burgess.com or your local SB outlet.								