3/2-Way; sub-base connection; DN 1,2-1,6; 0-10 bar



Advantages/Benefits

- **Coil can be changed easily with valve in place**
- **Coil can be locked in 4x 90° positions or move freely between, as required**
- **Medium is only in contact with the valve internals and body**
- **High-quality seal material FPM (Viton) standard**
- **Wide range of cable plug options Type 2506**
- **Compact design**

Design/Function

The valves are based on a modular concept comprising three basic elements; Valve assembly, push-over coil and standard cable plug. The valve assembly consists of a body to which the armature guide tube containing the plunger, seals and springs is attached.
The coil is pushed over the guide tube and thus isolated from the medium.
The medium is only in contact with the valve internals and body.

A wide selection of pipe and orifice sizes is offered. Valves are available in brass. All valves have high-quality viton (FPM) seals as standard.

To simplify ordering, a wide selection of standard combinations of valve body, push-over coil and standard cable plug can be ordered with one order number.

Cable plug options of Type 2506 are available to suit special electrical application requirements.

– The modular concept provides flexibility to meet application requirements.

– The valve is interchangeable with Type 301.

Applications

Fluids

Brass version: Neutral gases and liquids, e.g.compressed air, town gas, natural gas, water, hydraulic oil, petrol.
Stainless steel version: Difficult and slightly aggressive media

Suitable for technical vacuum

Applications
- Pneumatic control
- Shut-off, dosing, filling and ventilating
- Small-scale instruments, laboratory and measuring technology
- Welding technology

bürkert
Easy Fluid Control Systems

Miniature Solenoid Valve - General Purpose **Type 6012**

Sub-base Connection

Technical Data Type 6012

Circuit function	Symbol	Circuit function	Symbol
C 3/2-way valve, when de-energized, outlet A pressure relieved	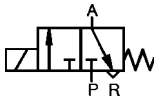	**D** 3/2-way valve, when de-energized, outlet B pressurized	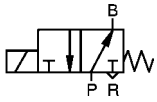

Operating Data (Valve)

Pressure range	0-10 bar (see specifications)
Port connection	Sub-base connection
Orifice	DN 1.2 - 1,6 mm
Fluid	Neutral gases and liquids, e.g. compressed air, town gas, natural gas, water, hydraulic oil, petrol. Stainless steel version: Difficult and slightly aggressive media. Suitable for techn. vacuum.
Medium temperature	–10 to +100 °C
Max. ambient temperature	+55 °C
Max. viscosity	21 mm^2/s
Response times	
opening	12 ms
closing	8 ms
Installation	as required, but preferably with solenoid system upright

Operating Data (Actuator)

Operating voltages	AC 24, 110, 230 V/50 Hz, DC 24 V/=
Voltages tolerance	±10 %
Power consumption	AC inrush: 9 VA; AC hold: 6 VA/4 W; DC: 4 W
Duty cycle	100% continuously rated
Duty cycle for multiple manifolds	60% for manifold mounting (30 min) or use 2W-version (on request)
Cycling rate	1000 c.p.m.
Protection class with cable plug	IP 65
Electr. connection	Delivery standard: Cable plug DIN 43 650 C, 0-250 V (Other versions see accessories)

Materials

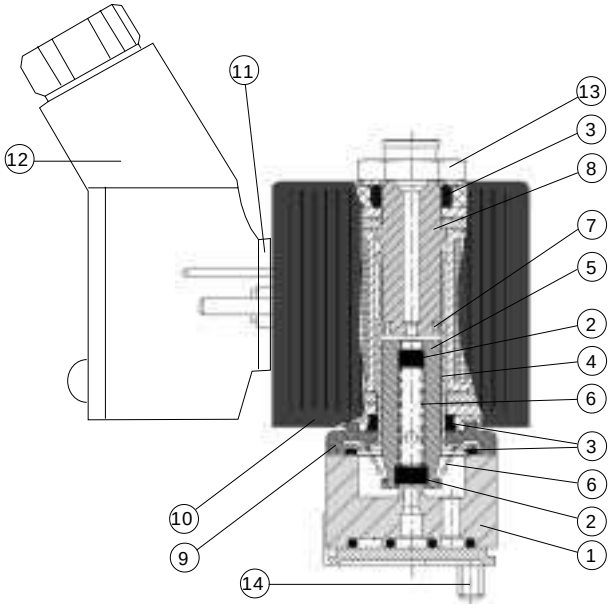

1	Valve body:	Brass S.Steel 1.4305
2	Plunger-seal:	FPM (Viton)
3	O-rings:	FPM (Viton)
4	Armature guide tube:	1.4303
5	Plunger:	1.4105
6	Spring:	1.4310
7	Shading ring:	Cu (brass version) Ag (stainless steel version)
8	Stopper:	1.4105
9	Flange:	Zn3 gl cC (surface)
10	Coil:	PA (Polyamide)
11	Flat seal:	NBR
12	Cable plug:	PA (Polyamide)
13	Locknut:	9SMnPb28K (surface Zn5glcA)
14	Mounting screw	DIN 84-4.8 A2L

Miniature Solenoid Valve - General Purpose **Type 6012**

Sub-base Connection

Specifications - Ordering Chart (Other Versions on Request)

Type 6012: brass and stainless steel body, Viton seal

(with standard-cable plug 0-250 V AC/DC)

Circuit function	Orifice [mm]	Kv-value water [m³/h]	QNn-Value air[1] [l/min]	Pressure range[2] [bar]	Port connection [inch]	Voltage/ frequency [V/Hz]	Weight [g]	**Order-No.** (Brass body)	**Order-No.** (Stainless) Steel body)
C	1,2	0,045	48	0–10	Sub-base	24/=	97	134 175 P	134 183 G
				0–10		24/50		134 176 Q	134 184 H
				0–10		110/50		134 177 R	134 185 A
				0–10		230/50		134 178 S	134 186 B
	1,6	0,06	65	0– 6	Sub-base	24/=	97	134 179 T	134 187 C
				0– 6		24/50		134 180 R	134 188 M
				0– 6		110/50		134 181 E	134 189 N
				0– 6		230/50		134 182 F	134 190 K

[1] Measured with 6 bar upstream pressure and 1 bar pressure drop across the valve at +20 °C.
[2] All pressures quoted are gauge pressures with respect to the prevailing atmospheric pressure.

Dimensions (in mm)

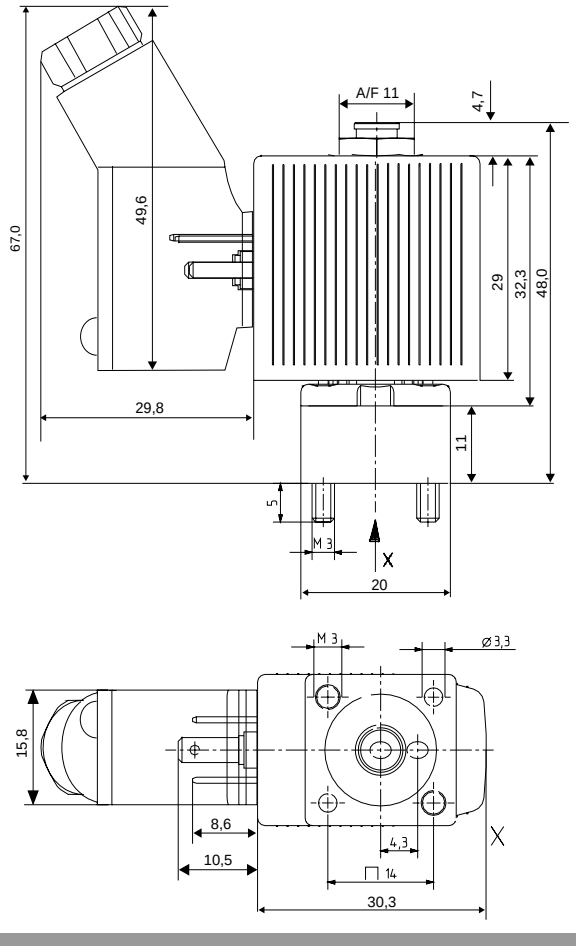

View without cable plug

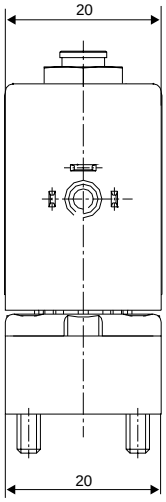

Dimensions Accessories (in mm)

Manifolds

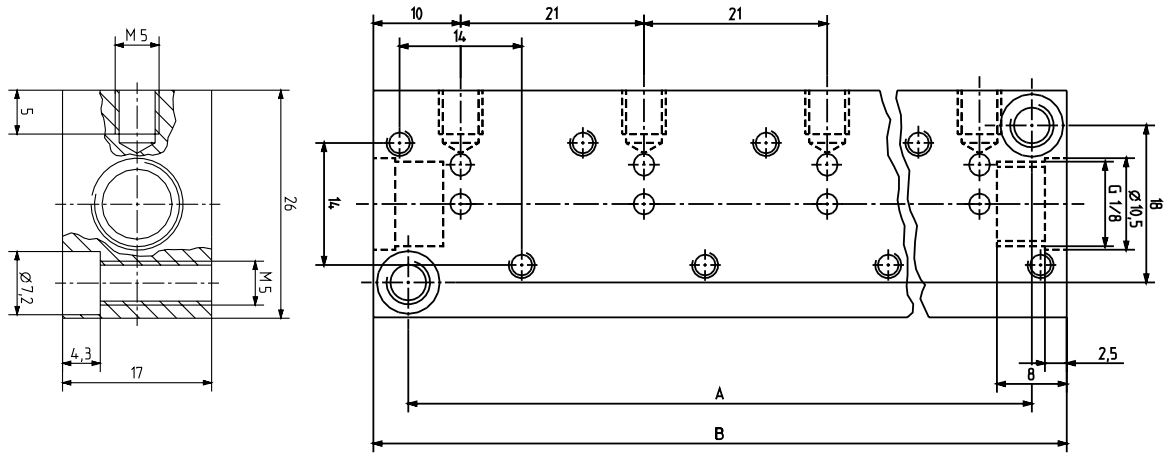

Manifold Mounting

The manifolds for 1 to 12 valves have a common pressure inlet P (R) for the pressure connection of type 6012-C or the exhaust connection of type 6012-D and an individual lateral outlet A (B) for each valve. Type 6012-C may also be mounted together with Type 6011 valves. They can however not be mounted with Type 6012-D valves. The electrical connection can be either on the right or left of the manifold.
Manifolds may be coupled together using special push-fit O-ring connecting nipples for linking the pressure inlets P (R). Manifolds joined together in this way should be securely mounted.

Ordering Chart for Manifolds/Accessories

Device/Accessory	Features			Order-No.
Single manifold	Aluminium			005 312 T
Multiple manifold[1] (Aluminium)	Hole spacing A	Overall length B		
2 valves	33	41		005 355 E
3 valves	54	62		005 313 U
4 valves	75	83		005 314 V
5 valves	96	104		005 315 W
6 valves	117	125		005 316 X
8 valves	159	167		005 166 Z
10 valves	201	209		005 819 Y
Connector nipples	with O-rings			005 040 A
Blanking screw	with seal ring, G 1/8			005 041 X
Blanking plug	with screws + 0-ring			

[1] Multiple manifolds for 7, 9, 11 and 12 Valves on request

Cable plug to DIN 43650, Form C

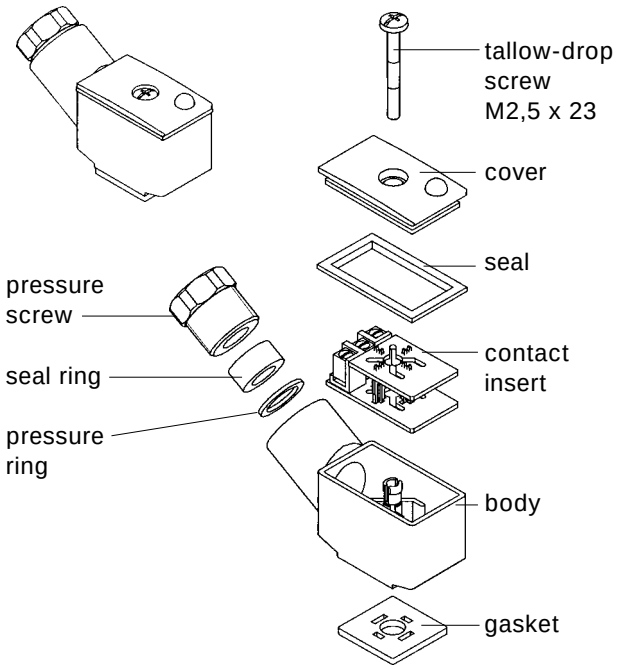

Ordering Chart for Accessories

Device/ Accessory	Features	
Cable-plugs[1] Type 2506	Standard cable plug, 0–250 V AC/DC (standard-delivery)[1]	008 353 P
	with LED, 12–24 V AC/DC	008 402 A
	with LED, 100-120 V AC/DC	008 403 B
	with LED, 200-240 V AC/DC	008 404 C
	with LED + varistor, 12–24 V AC/DC	008 408 Q
	with LED + varistor, 100–120 V AC/DC	008 409 R
	with LED + varistor, 200–240 V AC/DC	008 410 D
	(optional wirings and connection specifications see data sheet Type 2506)	

[1] The standard cable plug (0-250 V AC/DC), Order-No. 008 353 P is part of the standard delivery.
Ordering of optional cable plugs with separate ordering number.

A wide selection of further cable plugs is available (see special data sheet Type 2506)