35 NT2R 82 Miniature 35mm DC Motor

Ironless rotor design with graphite/copper commutation system - 13 segments

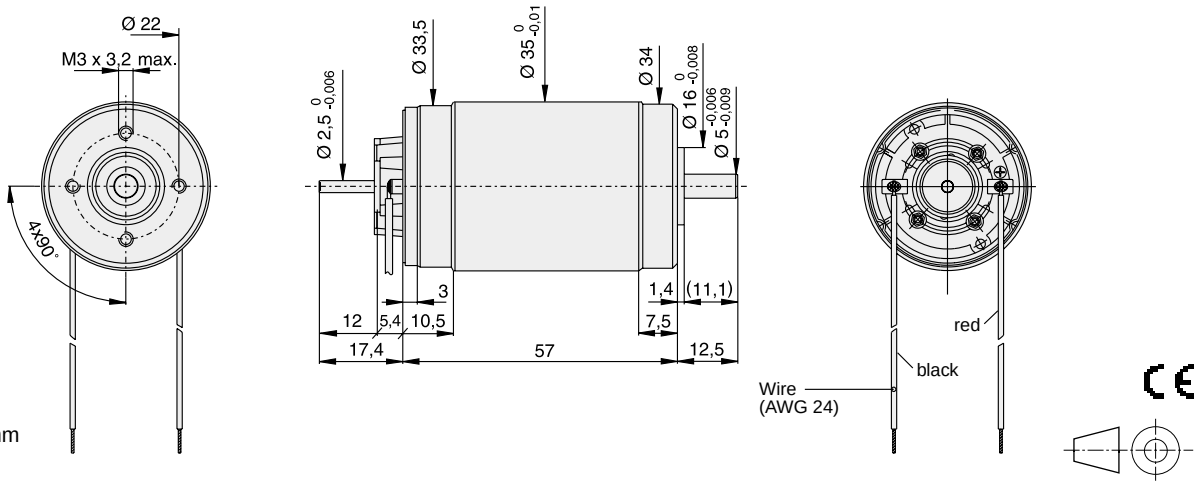

dimensions in mm
mass : 310 g

Suffix		426 SP 25
Measured values		
1 Measuring voltage	V	32
2 No-load speed	RPM	5900
3 Stall torque	mNm (oz-in)	756 (107)
4 Average no-load current	mA	80
5 Typical starting voltage	V	-
Max. recommended values		
6 Max. continuous current	A	2.3
7 Max. continuous torque	mNm (oz-in)	115 (16.3)
8 Max. angular acceleration	10^3 rad/s^2	64
Intrinsic parameters		
9 Back-EMF constant	V/1000 RPM	5.40
10 Torque constant	mNm/A (oz-in/A)	52 (7.3)
11 Terminal resistance	ohm	2.20
12 Motor regulation R/k^2	10^3/Nms	0.83
13 Rotor inductance	mH	0.40
14 Rotor inertia	kgm^2 × 10^{-7}	71.4

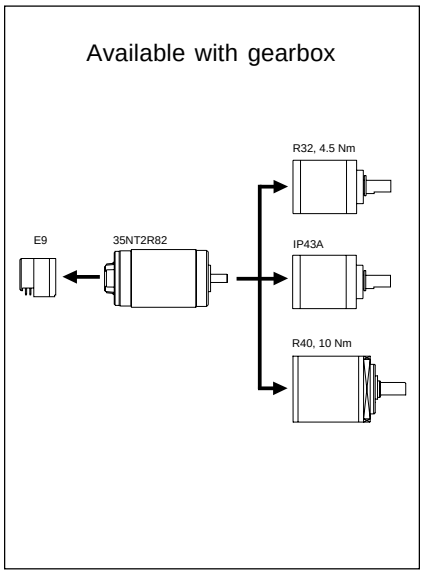

- Thermal resistance:
  rotor-body 4 °C/W
  body-ambient 8 °C/W
- Thermal time constant - rotor / stator:
  40 s / 920 s
- Max. rated coil temperature: 155°C
- Recom. ambient temperature range:
  -10 °C to +80 °C (-14 °F to +176 °F)
- Max. axial static force for press-fit: 100 N
  - shaft supported: 1000 N
- End play: negligible
  Radial play: negligible
  Shaft runout: ≤ 10 µm
- Max. side load at 10mm from mounting face: 35 N
- Motor fitted with ball bearings
- CE certified to 89/336/CEE

