KR 47 PPA

Dimensions

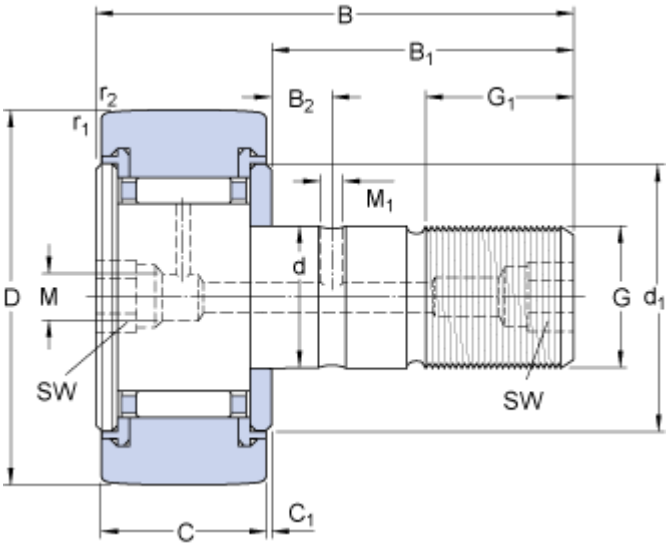

D		47	mm
d		20	mm
B		66	mm
C		24	mm
B_1		40.5	mm
B_2		9	mm
C_1		0.8	mm
d_1		36.5	mm
G		M 20x1.5	
G_1		21	mm
M		6	mm
M_1		4	mm
SW		10	mm
$r_{1,2}$	min.	1	mm

Calculation data

Basic dynamic load rating	C	14.7	kN
Basic static basic load rating	C_0	24.5	kN
Fatigue load limit	P_u	2.9	kN
Maximum dynamic radial loads	F_r	23.6	kN
Maximum static radial loads	F_{0r}	33.5	kN
Limiting speed		3000	r/min

Mass

Mass cam follower	0.381	kg

Mounting information

Recommended tighthening torque	120	N·m

Appertaining products

Grease fitting	NIP A2x7.5
Hexagonal nut	M 20x1.5

Appropriate products

Lubrication adapter	AP 10