HM and HM34
Inverted Bucket Steam Traps
Installation and Maintenance Instructions

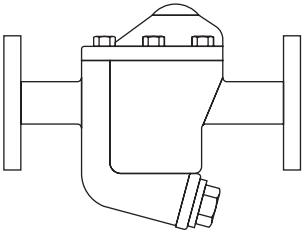

HM Series

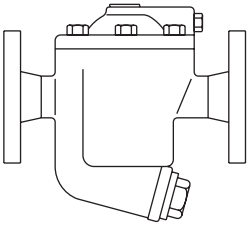

HM34 Series

1. Safety information
2. General product information
3. Installation
4. Commissioning
5. Operation
6. Maintenance
7. Spare parts

© Copyright 2016

Printed in France

1. Safety information

Safe operation of this product can only be guaranteed if it is properly installed, commissioned, used and maintained by qualified personnel (see Section 1.11) in compliance with the operating instructions. General installation and safety instructions for pipeline and plant construction, as well as the proper use of tools and safety equipment must also be complied with.

1.1 Intended use

Referring to the Installation and Maintenance Instructions, name-plate and Technical Information Sheet, check that the product is suitable for the intended use / application.

The product listed below complies with the requirements of the European Pressure Equipment Directive 97/23/EC and carries the CE mark when so required.

The product falls within the following Pressure Equipment Directive categories:

Product	Group 2 Gases	Group 2 Liquids
HM and HM34	SEP	SEP

i) The product has been specifically designed for use on steam, air or water / condensate which are in Group 2 of the above mentioned Pressure Equipment Directive. The products' use on other fluids may be possible but, if this is contemplated, Spirax Sarco should be contacted to confirm the suitability of the product for the application being considered.

ii) Check material suitability, pressure and temperature and their maximum and minimum values. If the maximum operating limits of the product are lower than those of the system in which it is being fitted, or if malfunction of the product could result in a dangerous overpressure or overtemperature occurrence, ensure a safety device is included in the system to prevent such over-limit situations.

iii) Determine the correct installation situation and direction of fluid flow.

iv) Spirax Sarco products are not intended to withstand external stresses that may be induced by any system to which they are fitted. It is the responsibility of the installer to consider these stresses and take adequate precautions to minimise them.

v) Remove protection covers from all connections before installation.

1.2 Access

Ensure safe access and if necessary a safe working platform (suitably guarded) before attempting to work on the product. Arrange suitable lifting gear if required.

1.3 Lighting

Ensure adequate lighting, particularly where detailed or intricate work is required.

1.4 Hazardous liquids or gases in the pipeline

Consider what is in the pipeline or what may have been in the pipeline at some previous time. Consider: flammable materials, substances hazardous to health, extremes of temperature.

1.5 Hazardous environment around the product

Consider: explosion risk areas, lack of oxygen (e.g. tanks, pits), dangerous gases, extremes of temperature, hot surfaces, fire hazard (e.g. during welding), excessive noise, moving machinery.

1.6 The system

Consider the effect on the complete system of the work proposed. Will any proposed action (e.g. closing isolation valves, electrical isolation) put any other part of the system or any personnel at risk?
Dangers might include isolation of vents or protective devices or the rendering ineffective of controls or alarms. Ensure isolation valves are turned on and off in a gradual way to avoid system shocks.

1.7 Pressure systems

Ensure that any pressure is isolated and safely vented to atmospheric pressure. Consider double isolation (double block and bleed) and the locking or labelling of closed valves. Do not assume that the system has depressurised even when the pressure gauge indicates zero.

1.8 Temperature

Allow time for temperature to normalise after isolation to avoid danger of burns.

1.9 Tools and consumables

Before starting work ensure that you have suitable tools and/or consumables available. Use only genuine Spirax Sarco replacement parts.

1.10 Protective clothing

Consider whether you and/or others in the vicinity require any protective clothing to protect against the hazards of, for example, chemicals, high/low temperature, radiation, noise, falling objects, and dangers to eyes and face.

1.11 Permits to work

All work must be carried out or be supervised by a suitably competent person. Installation and operating personnel should be trained in the correct use of the product according to the Installation and Maintenance Instructions.
Where a formal 'permit to work' system is in force it must be complied with. Where there is no such system, it is recommended that a responsible person should know what work is going on and, where necessary, arrange to have an assistant whose primary responsibility is safety.
Post 'warning notices' if necessary.

1.12 Handling

Manual handling of large and/or heavy products may present a risk of injury. Lifting, pushing, pulling, carrying or supporting a load by bodily force can cause injury particularly to the back. You are advised to assess the risks taking into account the task, the individual, the load and the working environment and use the appropriate handling method depending on the circumstances of the work being done.

1.13 Residual hazards

In normal use the external surface of the product may be very hot. If used at the maximum permitted operating conditions the surface temperature of some products may reach temperatures in excess of 425 °C (797 °F).
Many products are not self-draining. Take due care when dismantling or removing the product from an installation (refer to 'Maintenance instructions').

1.14 Freezing

Provision must be made to protect products which are not self-draining against frost damage in environments where they may be exposed to temperatures below freezing point.

1.15 Disposal

Unless otherwise stated in the Installation and Maintenance Instructions, this product is recyclable and no ecological hazard is anticipated with its disposal providing due care is taken.

1.16 Returning products

Customers and stockists are reminded that under EC Health, Safety and Environment Law, when returning products to Spirax Sarco they must provide information on any hazards and the precautions to be taken due to contamination residues or mechanical damage which may present a health, safety or environmental risk. This information must be provided in writing including Health and Safety data sheets relating to any substances identified as hazardous or potentially hazardous.

1.17 Working safely with cast iron produ

Cast iron products are commonly found on steam and condensate systems. If installed correctly using good steam engineering practices, it is perfectly safe.
However, because of its mechanical properties, it is less forgiving compared to other materials such as SG iron or carbon steel. The following are the good engineering practices required to prevent waterhammer and ensure safe working conditions on a steam system.

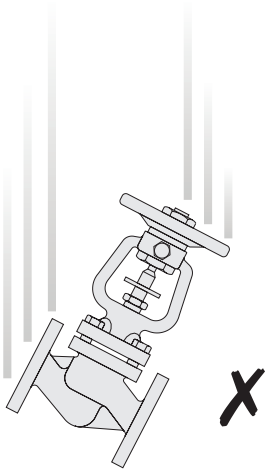

Safe Handling

Cast Iron is a brittle material. If the product is dropped during installation and there is any risk of damage the product should not be used unless it is fully inspected and pressure tested by the manufacturer.

Prevention of water hammer

Steam trapping on steam mains:

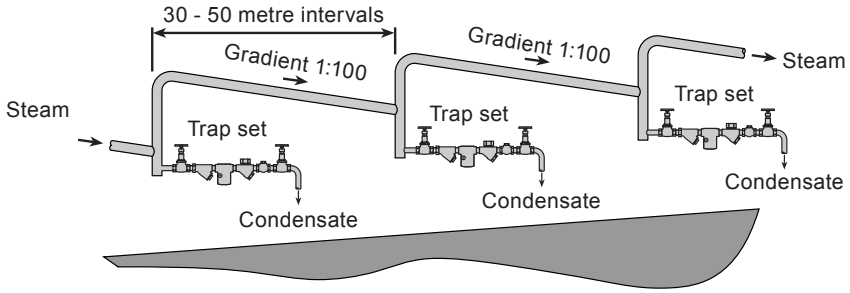

Steam Mains - Do's and Don'ts:

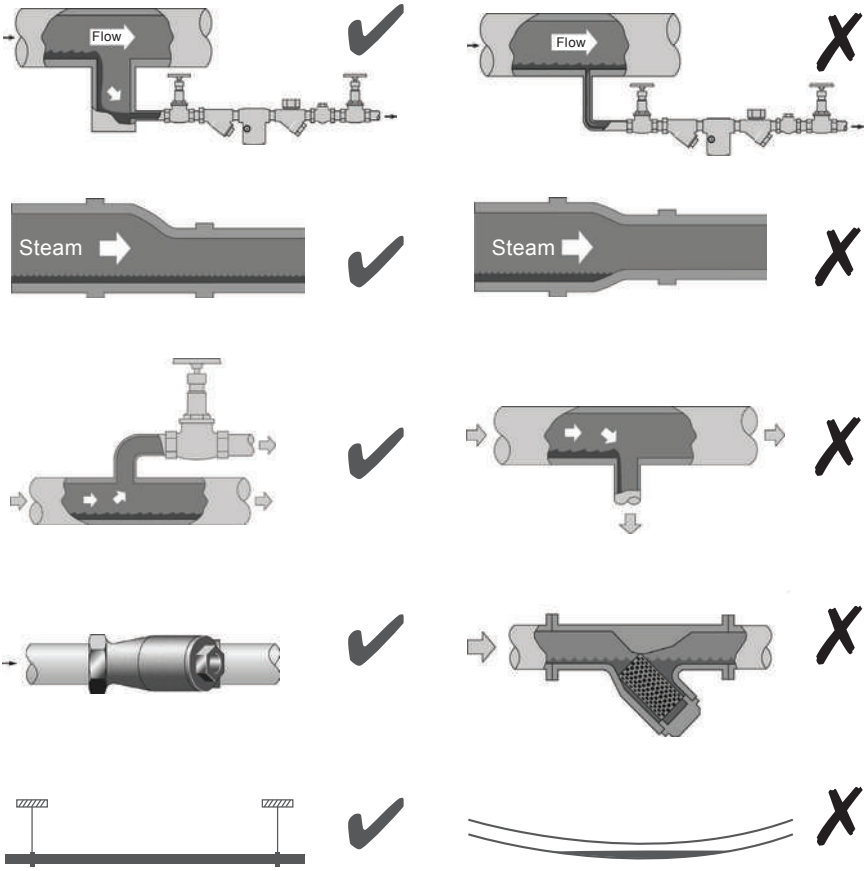

Prevention of tensile stressing

Pipe misalignment:

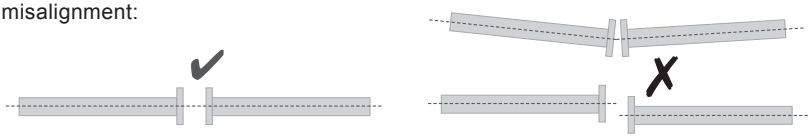

Installing products or re-assembling after maintenance:



Do not over tighten.
Use correct torque figures.

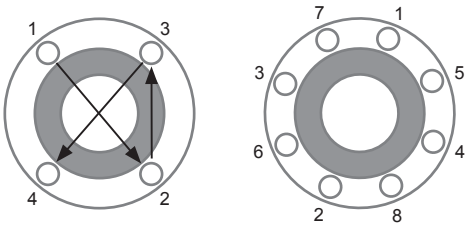

Flange bolts should be gradually tightened across diameters to ensure even load and alignment.

Thermal expansion:

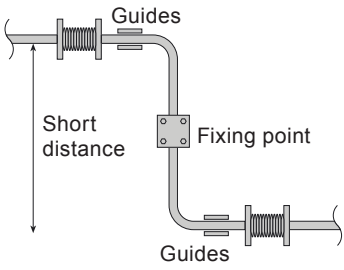

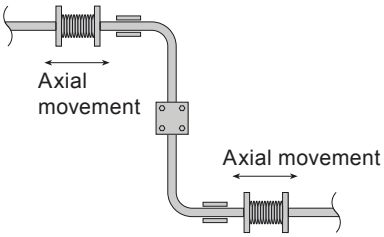

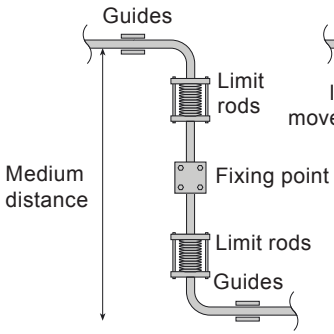

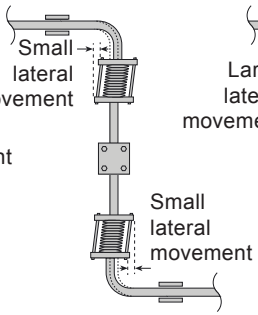

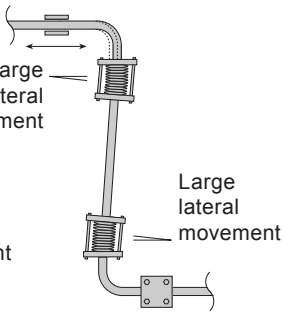

2. General product information

2.1 Description

The Spirax Sarco HM Series inverted bucket steam trap is manufactured in cast iron and has an integral strainer as standard. It is designed to be installed in horizontal pipework and will operate on steam pressures up to 14 bar g (203 psi g).

The Spirax Sarco HM34 series inverted bucket trap is similar to the HM Series but is manufactured in carbon steel and will operate on steam pressures up to 32 bar g (464 psi g).

Note: For further information see the following Technical Information Sheets, TI-S03-02 for the HM Series and TI-P072-01 for the HM34 Series, which gives full details of:- Materials, sizes and pipe connections, dimensions, weights, operating ranges and capacities.

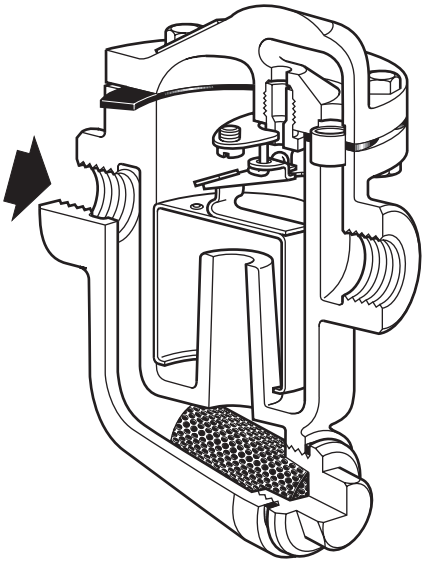

Fig. 1 HM00 (½") and HM10 (¾")

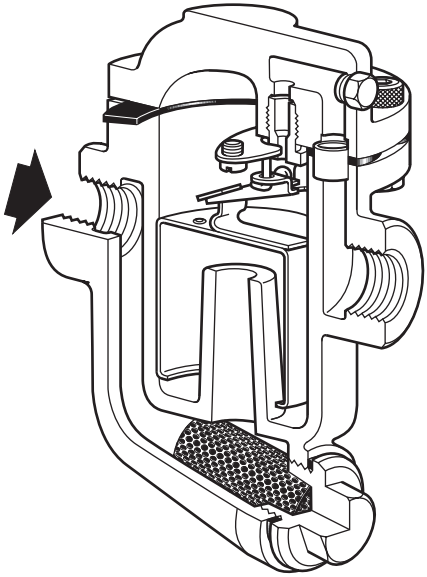

Fig. 3 HM34 (½" and ¾")

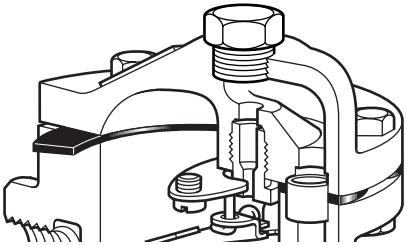

Fig. 2 HM12 (1")

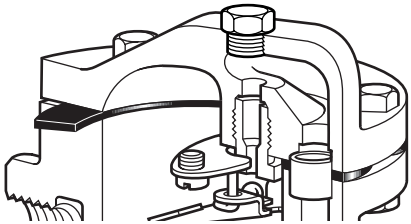

Fig. 4 HM34 (1")

2.2 Sizes and pipe connections

HM Series

½" (HM00), ¾" (HM10) and 1" (HM12) screwed BSP or NPT.
DN15 (HM003), DN20 (HM103) and DN25 (HM123) standard flange BS 4504 and DIN PN16.

HM34 Series

½", ¾" and 1" screwed BSP or NPT and socket weld ends BS 3799 Class 3000
DN15, DN20 and DN25 standard flange BS 4504 PN40.
Flanges also available ANSI 150 and ANSI 300.

2.3 Materials

Trap		HM Series	HM34 Series
Cover		Cast iron	Cast steel
Body	½" and ¾"	Cast iron	Forged steel
	1"	Cast iron	Cast steel
Internals		Stainless steel	Stainless steel

Note: For further information on materials see the following Technical Information Sheets: TI-S03-02 for the HM Series and TI-P072-01 for the HM34 Series.

2.4 Limiting conditions

		HM	HM34
Maximum body designed conditions		PN16	PN40
PMA	Maximum allowable pressure	16 bar g (232 psi g)	40 bar g (580 psi g)
TMA	Maximum allowable temperature	300 °C (572 °F)	300 °C (572 °F)
PMO	Maximum operating pressure	16 bar g (232 psi g)	40 bar g (580 psi g)
TMO	Maximum operating temperature	300 °C (572 °F)	300 °C (572 °F)
Designed for a maximum cold hydraulic test pressure of:		24 bar g (348 psi g)	60 bar g (870 psi g)

2.5 Operating range

HM Series

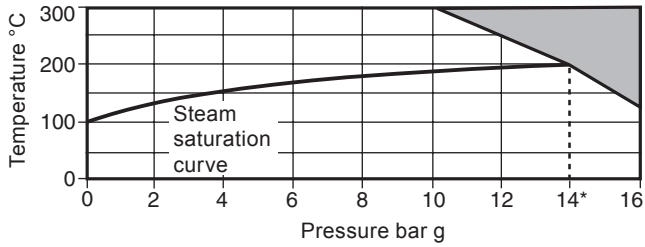

The product **must not** be used in this region.

*PMO Maximum operating pressure recommended for saturated steam 14 bar g (203 bar g).

∆PMX - Maximum differential pressure

Size		Maximum differential pressure bar				
		4	8.5	10	12.5	14
Screwed	½"	HM00/8	HM00/7	HM00/6	—	—
	¾"	HM10/10	HM10/8	—	HM10/7	—
	1"	HM12/12	HM12/10	—	—	HM12/7
Flanged	DN15	HM003/8	HM003/7	HM003/6	—	—
	DN20	HM103/10	HM103/8	—	HM103/7	—
	DN25	HM123/12	HM123/10	—	—	HM123/7

Note: The pressure limit of the flange type should be greater than the pressure limit of the internal mechanism selected.

HM34 Series

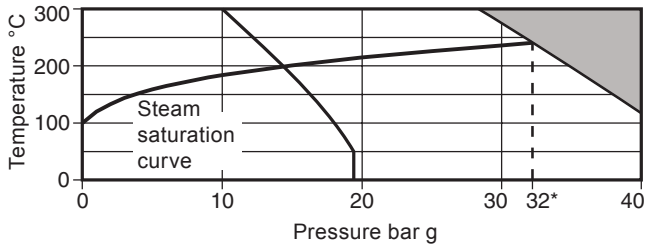

The product **must not** be used in this region.

*PMO Maximum operating pressure recommended for saturated steam 32 bar g (464 bar g).

ΔPMX - Maximum differential pressure

Size	Maximum differential pressure bar				
	4	**8.5**	**12**	**20**	**32**
DN15 - ½"	HM34/8	HM34/7	HM34/6	HM34/5	HM34/4
DN20 - ¾"	HM34/10	HM34/8	HM34/7	HM34/6	HM34/5
DN25 - 1"	HM34/12	HM34/10	HM34/8	HM34/6	HM34/5

Note: The pressure limit of the flange type should be greater than the pressure limit of the internal mechanism selected.

3. Installation

Note: Before actioning any installation observe the 'Safety information' in Section 1.

Referring to the Installation and Maintenance Instructions, name-plate and Technical Information Sheet, check that the product is suitable for the intended installation.

3.1 Check materials, pressure and temperature and their maximum values. If the maximum operating limit of the product is lower than that of the system in which it is being fitted, ensure that a safety device is included in the system to prevent overpressurisation.

3.2 Determine the correct installation situation and the direction of fluid flow.

3.3 Remove protective covers from all connections.

3.4 The trap must be installed with the body upright so that the bucket is rising and falling vertically. When superheat conditions exist the trap body may need to be primed with water prior to steam being turned on to avoid steam blowing through the trap.

3.5 Inverted bucket steam traps do not permit rapid release of air. On process applications, in particular, this can lead to slow warm-up times and waterlogging of the steam space. A separate external air vent is therefore required in parallel to vent air efficiently. Any bypass should be positioned above the trap. If it is below, and is leaking or left open, the waterseal could be blown away leading to steam wastage (see Fig. 5). Where inverted bucket traps are fitted in exposed conditions the possibility of freezing damage can be reduced by thermal insulation.

3.6 Traps must be installed in a horizontal pipeline with the strainer pocket at the bottom. The inlet of the trap should be below the drain point of the plant being drained, so that a waterseal can be maintained around the open end of the bucket. A small drop leg should precede the trap - typically 150 mm (6").

3.7 Where the trap discharges into a closed condensate return system or where there is a lift at the trap, a check valve should be fitted downstream of the trap.

3.8 If the trap has to be installed at a higher point than the drainage point then a small bore riser into a 'U' seal should be used. A check valve should be fitted before the trap to prevent the loss of the internal waterseal. See Fig. 6.

Note: If the trap is to discharge to atmosphere ensure it is to a safe place, the discharging fluid may be at a temperature of 100 °C (212 °F).

4. Commissioning

After installation or maintenance ensure that the system is fully functioning. Carry out tests on any alarms or protective devices.

5. Operation

Under most conditions the trap will discharge condensate with a blast type action. Under low load and/or low pressure applications the discharge may tend to 'dribble'. Condensate is discharged at steam temperature so due care must be given to the site of the discharge.

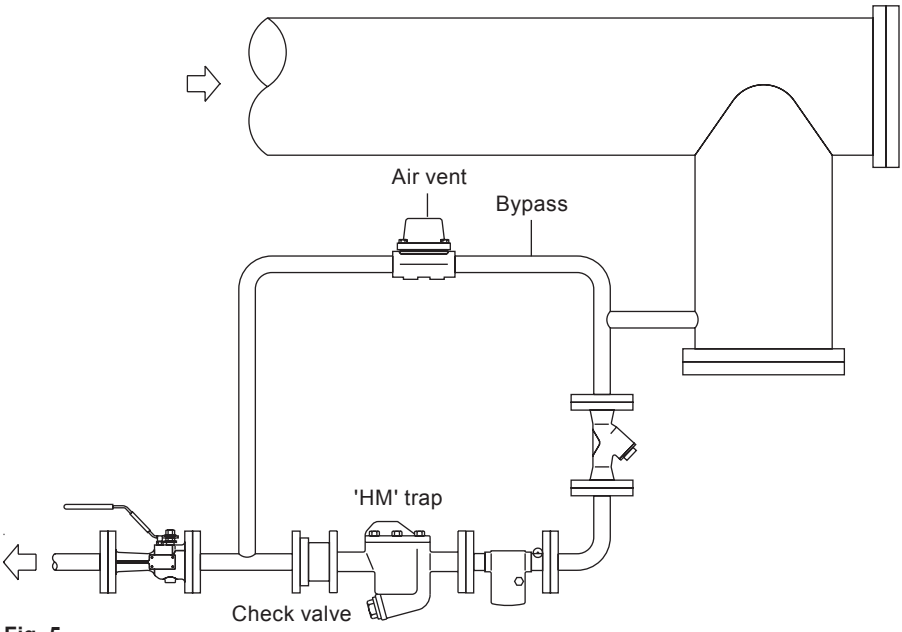

Fig. 5

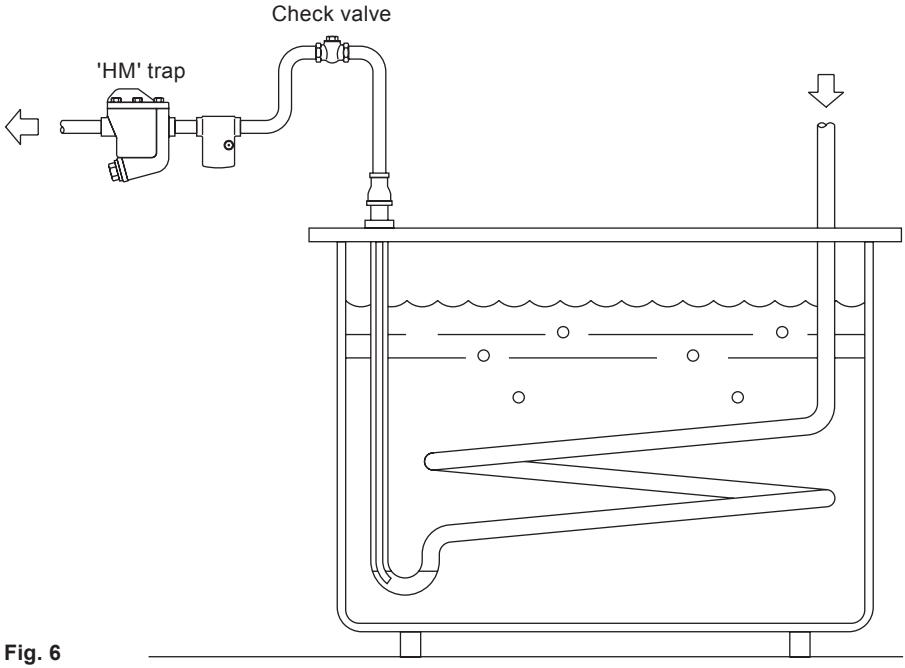

Fig. 6

6. Maintenance

Note: Before actioning any maintenance program observe the 'Safety information' in Section 1.

Warning

The body/cover gasket and strainer cap gasket contain a thin stainless steel support ring which may cause physical injury if not handled and disposed of carefully.

6.1 Before undertaking any maintenance on the trap it must be isolated from both the supply line and return line and any pressure allowed to safely normalise to atmosphere. The trap should then be allowed to cool. When reassembling, ensure that all joint faces are clean.

6.2 How to fit the valve and seat assembly:

- Undo the cover bolts and nuts (**2**) and remove the cover from the body.
- Unhook the bucket (**4**) from the valve lever (**10**).
- Remove the valve guide plate by undoing the two screws (**5**).
- Remove the seat (**8**) from the cover.
- Ensure all joining faces are clean and then screw in the new seat to the recommended tightening torque. Use a small amount of joining paste on the threads.
- Fit new valve guide plate with the two screws supplied and refit the new lever. Ensure that the valve and seat are aligned correctly before finally tightening the guide plate screws.
- Hook the bucket to the lever and ensure gasket faces on the body cover are clean.
- Using a new cover gasket (**7**) refit the cover to the body ensuring the small ferrule (**11**) is positioned correctly. Tighten cover bolts / nuts to the recommended tightening torque (see Table 1).

6.3 How to clean / replace the strainer screen:

- Undo the strainer cap (**13**) and remove the screen (**12**) and gasket (**14**).
- Clean or replace the strainer screen (**12**).
- Ensure threads are clean.
- Refit new strainer cap gasket and locate the screen in the strainer cap.
- Screw into the body and tighten to the recommended torque (see Table 1).

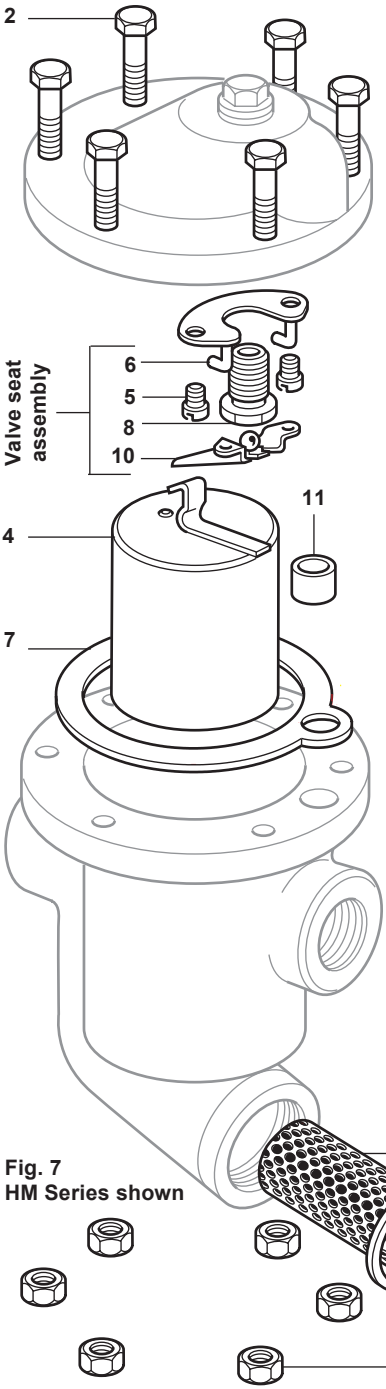

Fig. 7
HM Series shown

Table 1
Recommended tightening torques

Item no.			or mm		Nm	(lbf ft)
2	HM	½" and ¾"		M6 x 25	15 - 16	(11 - 12)
		1"		M12 x 45	85 - 95	(61 - 68)
	HM34	½" and ¾"		M8 x 30	25 - 28	(18 - 20)
		1"		M12 x 45	25 - 28	(18 - 20)
8	HM	½" and ¾"	13		50 - 55	(36 - 40)
		1"	13		80 - 88	(57 - 63)
	HM34	½" and ¾"	13		50 - 55	(36 - 40)
		1"	13		80 - 88	(57 - 63)
13	HM	½" and ¾"	22	M28	90 - 100	(64 - 72)
		1"	27	M32	125 - 145	(89 - 104)
	HM34	½" and ¾"	22	M28	90 - 100	(64 - 72)
		1"	27	M32	125 - 145	(89 - 104)

7. Spare parts

The spare parts available are shown in heavy outline. Parts drawn in a grey line are not supplied as spares.

Available spares

Valve and seat assembly	**5, 6** (2 off)**, 8, 10**
Bucket	**4**
Cover gasket and ferrule (packet of 3 each)	**7, 11**
Strainer screen	**12**
Strainer screen gasket (packet of 3)	**14**
Set of cover bolts and nuts (set of 6) (HM34 only)	**2**

How to order spares

Always order spares by using the description given in the column headed 'Available spares' and state the size and series of the trap.

Example: 1 - Valve and seat assembly for DN15 HM34/7 Spirax Sarco inverted bucket steam trap.

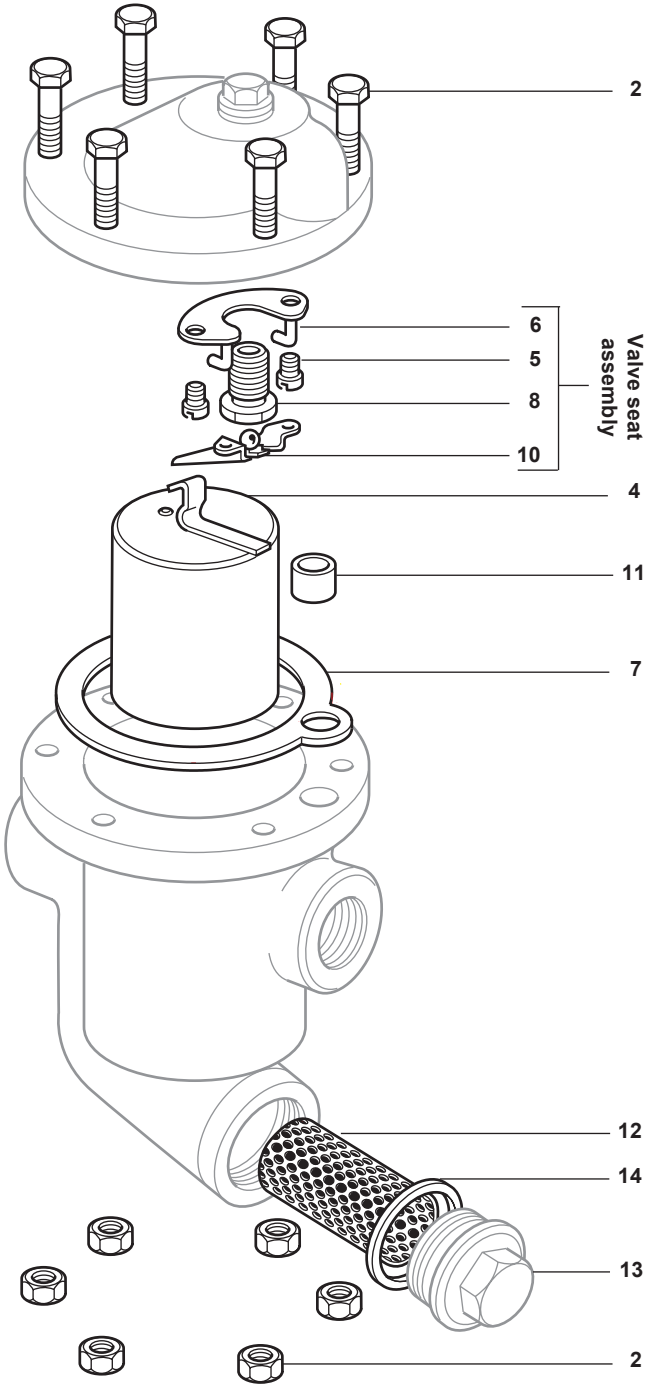

Fig. 8 HM Series shown