Brand of NTN corporation

Technical data

UKFC211HCO

Bearing units



Grey cast housing, radial insert ball bearing with adapter sleeve,seal with slinger

KIT CONTENT

UK211G2H, SCO211-50, FC211N

VISUAL (S)

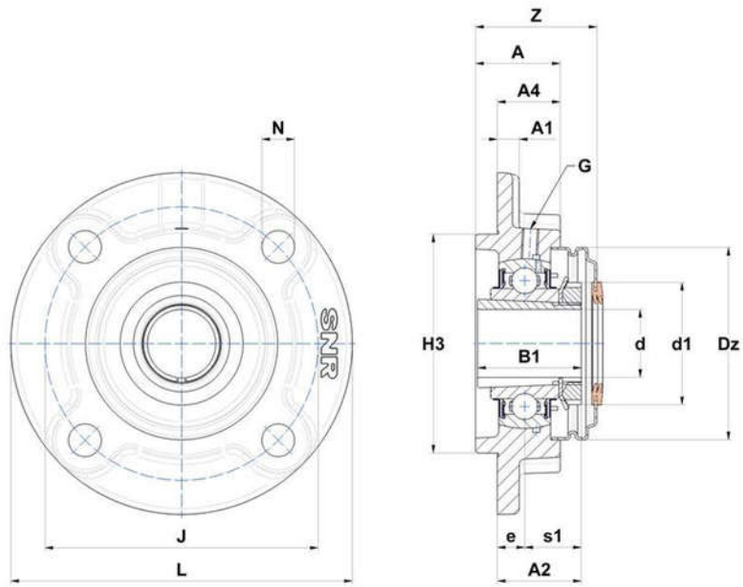

PRODUCT DEFINITION

Brand	SNR
A - Housing height	42 mm
A1 - Housing foot height / flange height	13 mm
A2 - Total height from mounting surface	42 mm
A4 - Housing height from mounting surface	30 mm
B - Width of Inner Ring	33 mm

UKFC211HCO
Bearing units

PRODUCT DEFINITION	
B1 - Overall width Inner Ring	59 mm
d - Shaft diameter	50 mm
d1 - Outer dia of eccent. Lock. collar / nut of adapter sleeve	75 mm
Dz - Outer diameter of cover	110 mm
e - Distance mounting surface to bearing center	13 mm
G - Grease fitting	M6x1
H3 - Centering dia	125 mm
J - Mounting holes distance	150 mm
L - Housing width / diameter	185 mm
N - Mounting hole dimension	19 mm
Z - Width over covers	62,8 mm

PRODUCT PERFORMANCE	
C - Dynamic load rating	43550000 mN
C0 - Static load rating	29200000 mN
Operating temperature min.	253,15 °K
Operating temperature max.	373,15 °K

OTHER FEATURES	
Mass	4,014 kg
Adapter sleeve designation	H2311