Foot-switch
Series F1

Description **F1-902 UN**	Article number **6061000585**

Switching diagram

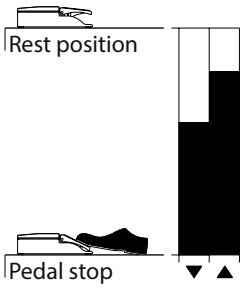

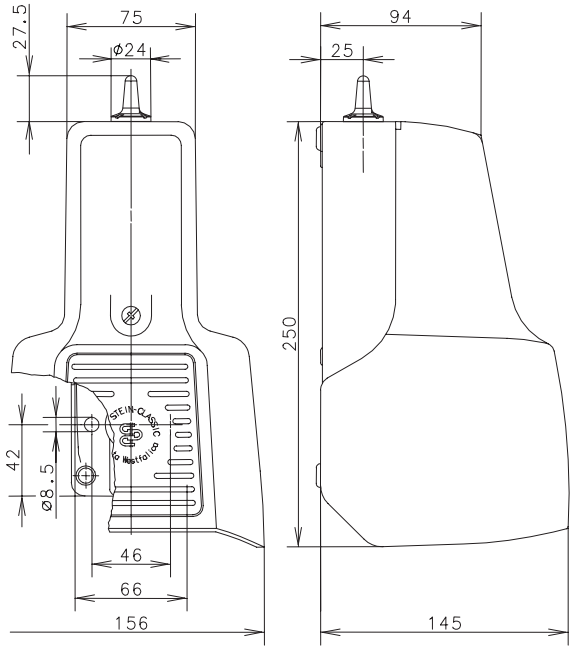

Operating data	
Voltage supply	Electrodynamic energy generator (energy harvesting)
Transmission protocol	EnOcean 902 MHz
Typical operating distances	approximately 80 meters in open space without obstacles approximately 20 meters in industrial environments with structural obstacles

Mechanical Data	
Enclosure	AL (colour: black)
Protective guard (Accident protection cover UN)	AL (colour: black)
Actuator	Foot lever (PA, colour: black)
Ambient air temperature	–15 °C ... +70 °C
Storage temperature	–30 °C ... +80 °C
Mechanical life	1 x 10^6 switching cycles
Assembly	2 x M8
Weight including protective guard	≈ 1,4 kg
Protection type	IP 67 acc. to EN 60529

Switching frequency depending on the receiver	
3600 cycles / hour	1 transmitter signal per relay output of the receiver
1800 cycles / hour	2 to 28 simultaneous transmitter signals per relay output of the receiver
720 cycles / hour	1 transmitter per relay output of the receiver in two-stage mode

Standards	
	IEC 60947-5-1
	EN 60947-5-1

EU Conformity	
	acc. to directive 2014/53/EU (RED-directive)

Approvals	
	FCC Part 15B requirements
	ICES-003 requirements

Technical modifications and errors excepted.
The technical datasheet corresponds to the technical state as of 2026-02-17 and will not be removed in case of changes.