# LR3000

## Continuous level sensor (guided wave radar)

LR0000B-BR34AMPKG/US

Please see the technical note under "Downloads"

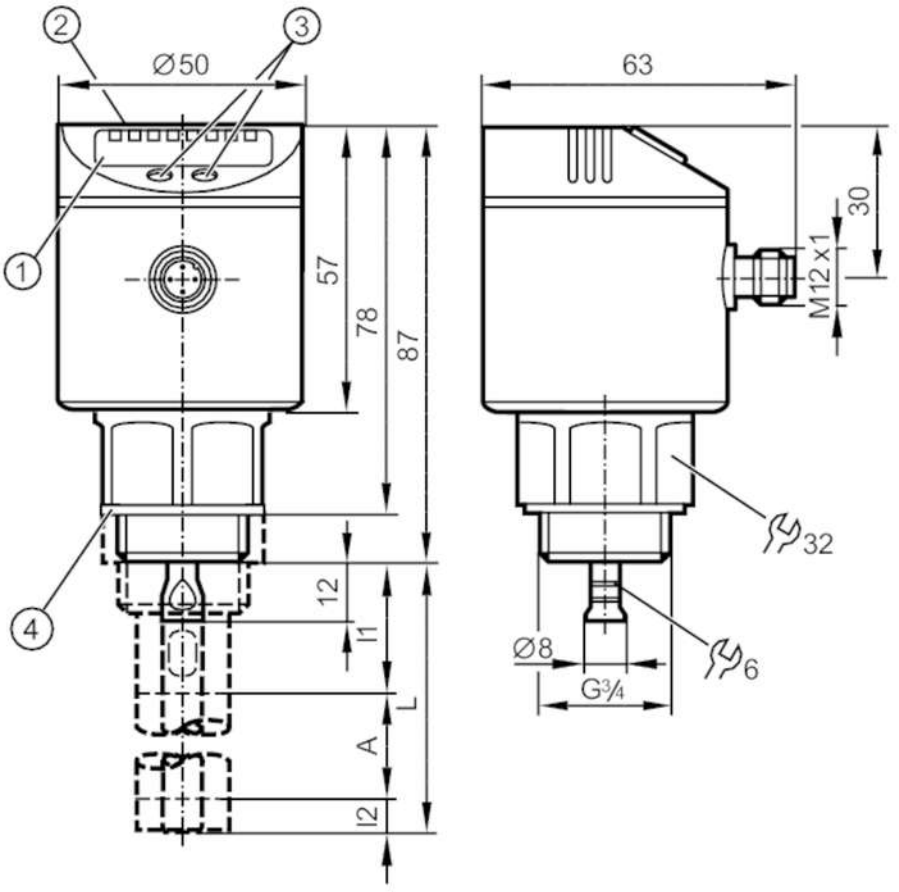


| | |
|---|---|
| 1 | alphanumeric display 4-digit |
| 2 | LEDs Display unit / switching status |
| 3 | programming buttons |
| 4 | Sealing |
| A | active range |
| I1 / I2 | inactive ranges |

CE CRN cULus LISTED EAC IO-Link

| Product characteristics | | |
|---|---|---|
| Number of inputs and outputs | | Number of digital outputs: 1; Number of analogue outputs: 1 |
| Probe length L | [mm] | 100...1600 |
| Process connection | | G 3/4 external thread |

# LR3000

## Continuous level sensor (guided wave radar)

LR0000B-BR34AMPKG/US

| | | |
|---|---|---|
| **Application** | | |
| Special feature | | Gold-plated contacts |
| Media | | Liquids |
| Dielectric constant of the medium | | ≥ 1,8; (for media with a dielectric constant of 1.8...5 (e.g. oils), a coaxial pipe is needed for operation) |
| Recommended media | | water; hydrous media; oils; oil-based media |
| Cannot be used for | | See the operating instructions, chapter "Function and features". |
| Medium temperature | [°C] | -25...80; (90 < 1 h) |
| Tank pressure | [bar] | -1...16 |
| MAWP (for applications according to CRN) | [bar] | 16 |
| **Electrical data** | | |
| Operating voltage | [V] | 18...30 DC |
| Current consumption | [mA] | < 30 |
| Protection class | | III |
| Reverse polarity protection | | yes |
| Power-on delay time | [s] | < 3 |
| **Inputs / outputs** | | |
| Number of inputs and outputs | | Number of digital outputs: 1; Number of analogue outputs: 1 |
| **Outputs** | | |
| Total number of outputs | | 2 |
| Output signal | | switching signal; analogue signal; IO-Link |
| Electrical design | | PNP |
| Number of digital outputs | | 1 |
| Output function | | normally open / normally closed; (parameterisable) |
| Max. voltage drop switching output DC | [V] | 2.5 |
| Permanent current rating of switching output DC | [mA] | 200 |
| Number of analogue outputs | | 1 |
| Analogue current output | [mA] | 4...20, invertible; (scalable) |
| Max. load | [Ω] | 500 |
| Analogue voltage output | [V] | 0...10, invertible; (scalable) |
| Min. load resistance | [Ω] | 2000 |
| Short-circuit protection | | yes |
| Type of short-circuit protection | | thermal, pulsed |
| Overload protection | | yes |
| **Measuring/setting range** | | |
| Probe length L | [mm] | 100...1600 |
| Active range A | [mm] | L-40; (when set to oil and oil based media: L-60) |
| Inactive range I1 / I2 | [mm] | 30 / 10; (when set to oil and oil based media: 30 / 30) |
| Sampling rate | [Hz] | 4 |

# LR3000

## Continuous level sensor (guided wave radar)

LR0000B-BR34AMPKG/US

| | | | |
|---|---|---|---|
| **Setting range** | | | |
| Set point SP | [mm] | ≥ 15...L-30 | |
| Note on setpoint SP | | when set to oil and oil based media: 35...L-30 | |
| Reset point rP | [mm] | ≥ 10...L-35 | |
| Note on reset point rP | | when set to oil and oil based media: 30...L-35 | |
| In steps of | [mm] | 5 | |
| Hysteresis | [mm] | > 5 | |
| **Accuracy / deviations** | | | |
| Repeatability | [mm] | ± 5 | |
| Measuring error | [mm] | ± 7 | |
| Offset error | [mm] | 5 | |
| Resolution | [mm] | 1 | |
| Zero signal (voltage) | [V] | 0 | |
| Zero signal (current) | [mA] | 4.0 | |
| Full signal (voltage) | [V] | 10 | |
| Full signal (current) | [mA] | 20 | |
| Temperature drift per 10 K | | ± 0.2 | |
| **Interfaces** | | | |
| Communication interface | | IO-Link | |
| Transmission type | | COM2 (38,4 kBaud) | |
| IO-Link revision | | 1.1 | |
| SDCI standard | | IEC 61131-9 CDV | |
| Profiles | | no profile | |
| SIO mode | | yes | |
| Required master port type | | A | |
| Process data analogue | | 1 | |
| Process data binary | | 1 | |
| Min. process cycle time | [ms] | 2.3 | |
| Supported DeviceIDs | | Type of operation | DeviceID |
| | | Default | 344 |
| **Operating conditions** | | | |
| Ambient temperature | [°C] | -25...60 | |
| Storage temperature | [°C] | -40...80 | |
| Protection | | IP 67 | |
| **Tests / approvals** | | | |
| EMC | | DIN EN 61000-6-2 | |
| | | DIN EN 61000-6-3 | in a closed metal tank |
| | | DIN EN 61000-6-4 | in plastic or open metal tanks |
| Shock resistance | | DIN EN 60068-2-27 | 50 g (11 ms) / 25 g (6 ms) with reference rod 0.5 m |
| Vibration resistance | | DIN EN 60068-2-6 | 5 g (10...2000 Hz) / 1 g (5...200 Hz) with reference rod 0.5 m |
| MTTF | [years] | 196 | |
| UL approval | | UL Approval no. | H006 |
| | | File number UL | E174191 |

# LR3000

## Continuous level sensor (guided wave radar)

LR0000B-BR34AMPKG/US

| Mechanical data | | |
|---|---|---|
| Weight [g] | 437 | |
| Materials | stainless steel (1.4301 / 304); stainless steel (1.4404 / 316L); FKM; PBT; PC; PEI; TPE-V | |
| Materials (wetted parts) | stainless steel (1.4305 / 303); probe connection: stainless steel (1.4435 / 316L); PTFE; FKM; Sealing: NBR reinforced fibre | |
| Process connection | G 3/4 external thread | |

| Displays / operating elements | | |
|---|---|---|
| Display | Display unit | 3 x LED, green |
| | switching status | 1 x LED, yellow |
| | level | alphanumeric display, 4-digit |
| | parameter setting | alphanumeric display, 4-digit |

| Remarks | |
|---|---|
| Notes | Please see the technical note under "Downloads" |
| Pack quantity | 1 pcs. |

## Electrical connection

Connector: 1 x M12; Contacts: gold-plated



# LR3000

## Continuous level sensor (guided wave radar)

LR0000B-BR34AMPKG/US

### Connection

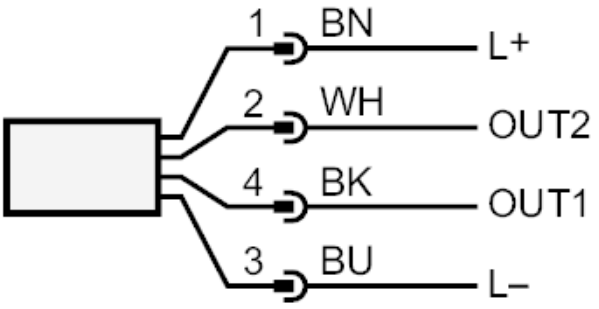


| | |
|---|---|
| OUT1: | switching output or IO-Link |
| OUT2: | analogue output |
| | colours to DIN EN 60947-5-2 |
| | Core colours : |
| BK = | black |
| BN = | brown |
| BU = | blue |
| WH = | white |

### Diagrams and graphs

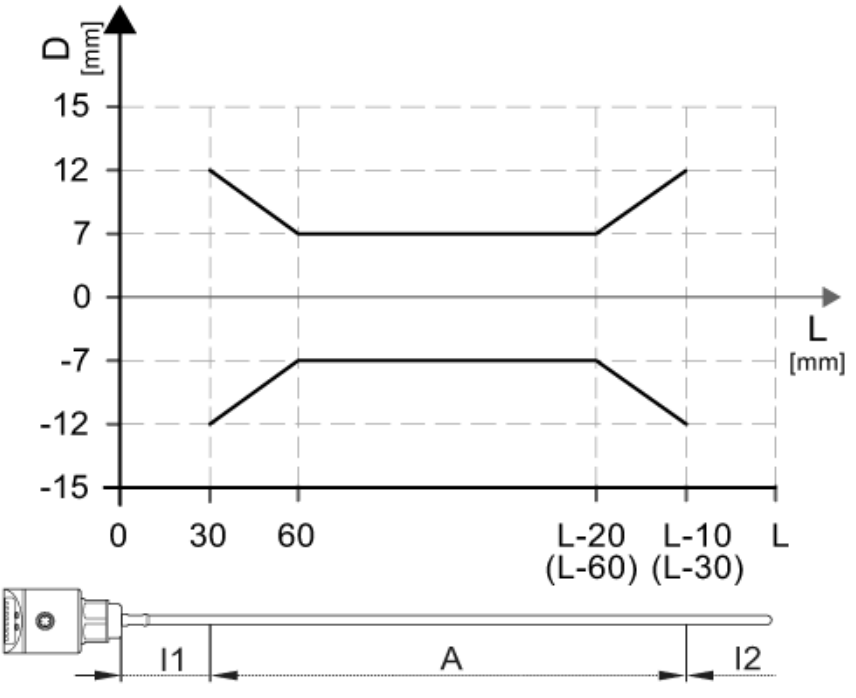


Measurement deviation D at the limits of the active rod range